THIS DRAWING IS UNPUBLISHED. RELEASED FOR PUBLICATION APRIL 20, 2002
© COPYRIGHT APRIL 20, 2002 BY TYCO ELECTRONICS CORPORATION. ALL RIGHTS RESERVED.

LOC	DIST
FX	00

REVISIONS

P	LTR	DESCRIPTION	DATE	DWN	APVD
	D1	REVISED PER ECR 07-029132	07JAN2008	DLD	WTW
	E	REVISED PER ECR 07-030366	08JAN2008	DLD	WTW
	F	REVISED PER ECO 08-006962	19MAR2008	DLD	WTW

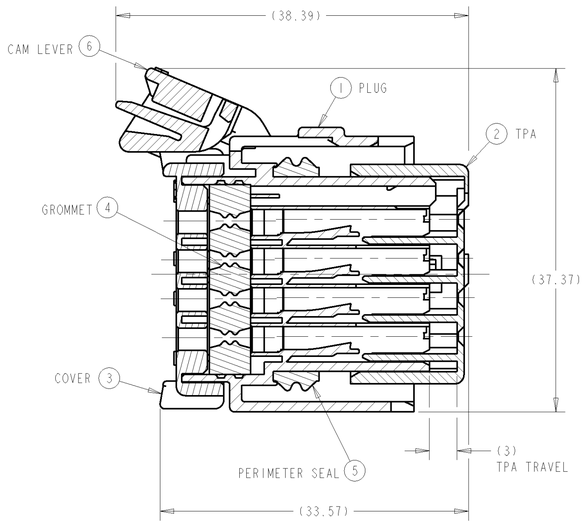

SECTION A-A
SHOWN WITH CAM LEVER
AND TPA IN THEIR
PRE-LOADED POSITIONS
(DELIVERY CONDITION)

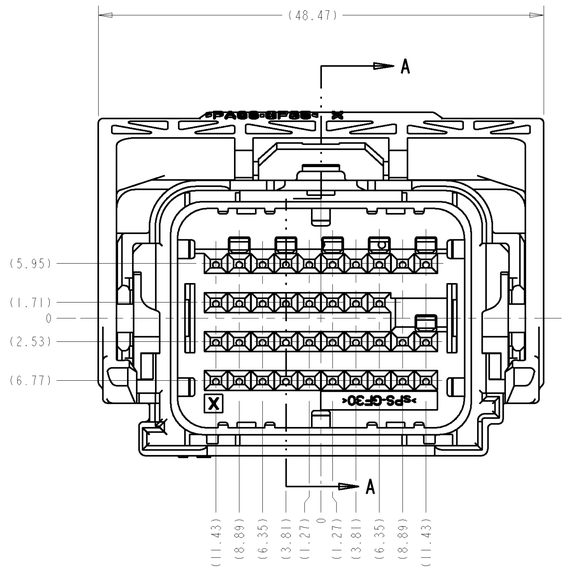

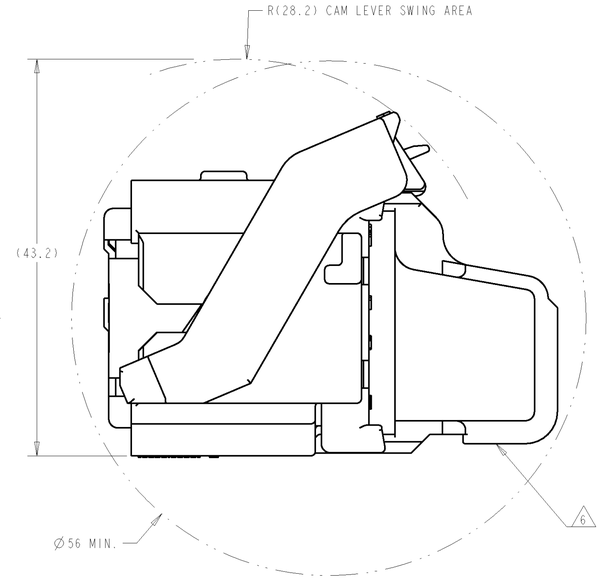

MINIMUM FEED THROUGH CONDITION
WITH 1mm CLEARANCE ALL AROUND
SHOWN WITH OPTION WIRESHIELD
TPA IS IN IT'S LOADED POSITION
CAM LEVER IS IN IT'S PRE-LOADED POSITION

KEYING OPTIONS
SCALE 2:1

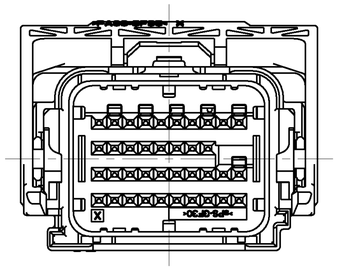

OPTION "G"

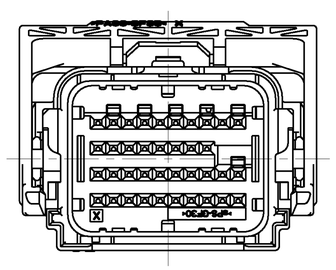

OPTION "H"

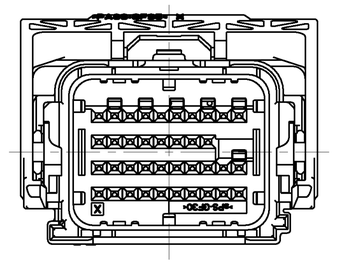

OPTION "J"

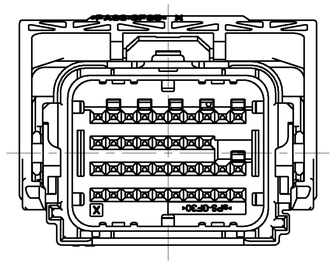

OPTION "K"

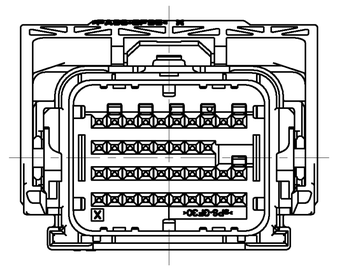

OPTION "L"

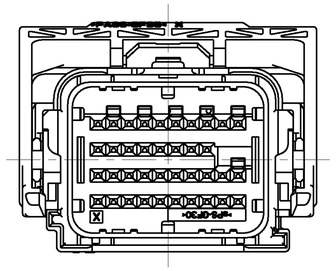

OPTION "M"

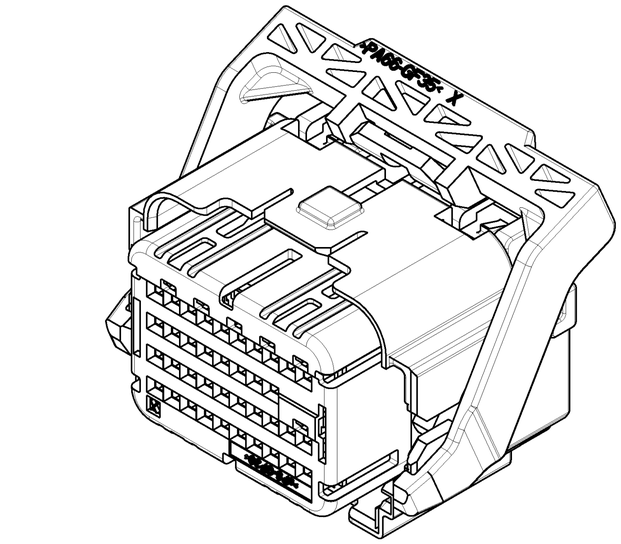

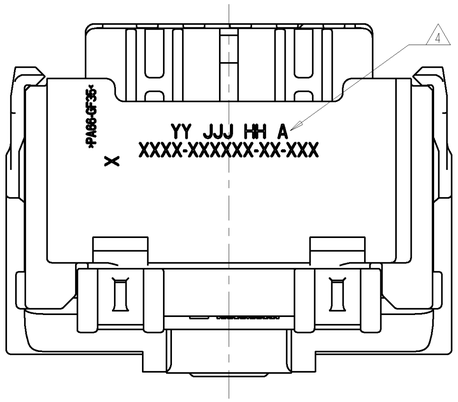

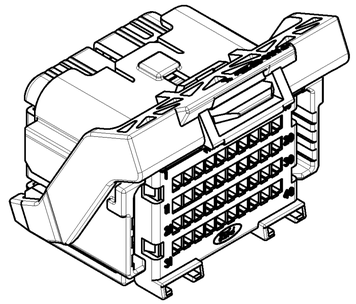

SCALE 2:1

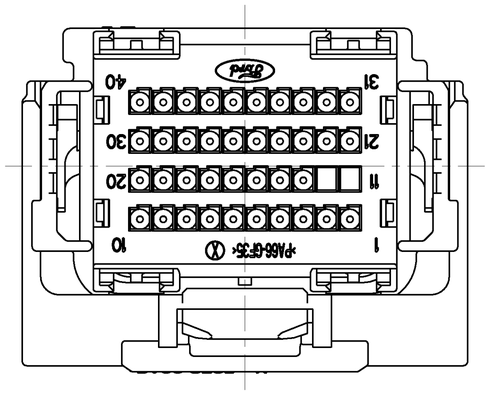

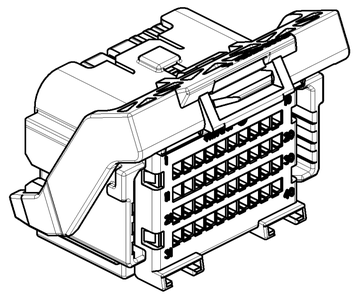

THIS VIEW SHOWS THE
MODIFIED CAM LEVER
SCALE 2:1

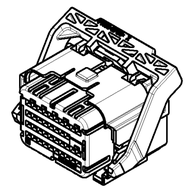

SCALE 1:1

KEYING OPTION "G" SHOWN
SEE SHEET 2 FOR BILL OF MATERIALS
AND SHEET 3, 4 AND 5 FOR PIN-OUT CHARTS

NOTE(S):

1. APPLICABLE TERMINAL PART NUMBERS (SOLD SEPARATELY):
   FOR TIN APPLICATIONS: 1393367 AND 1393366.
   FOR GOLD APPLICATIONS: 1393365 AND 1393364.
   FOR TERMINATION AND REELING OPTIONS
   SEE DRAWINGS 1393367, 1393366, 1393365, AND 1393364.

2. COMPATIBLE WIRE SIZES FOR MAT SEAL DESIGN 1.19 TO 2.06 O.D.
   (22-18 AWG, 0.35-0.75 mm2)

3. TPA AND CAM LEVER ARE SHIPPED IN THEIR PRE-LOADED POSITION.
   ALL ASSEMBLIES ARE TO BE TRAY PACKAGED.

4. CUSTOMER PART NUMBER AND TRACEABILITY CODE (YY = TWO DIGIT YEAR, JJJ = JULIAN DAY, HH = TWO DIGIT MILITARY HOUR, A=ASSEMBLY PROCESS USED) ARE PRINTED IN THIS LOCATION.

5. PART ASSEMBLY WEIGHT WITHOUT TERMINALS AND WITH STANDARD PIN-OUT CONFIGURATION IS 26.09 GRAMS.

6. OPTIONAL WIRESHIELD P/N 8-1419157-8 (SOLD SEPARATELY). PLEASE CONTACT YOUR TYCO ELECTRONICS SALES REPRESENTATIVE FOR AVAILABILITY AND PRICING.

THIS DRAWING IS A CONTROLLED DOCUMENT FOR TYCO ELECTRONICS CORPORATION. IT IS SUBJECT TO CHANGE AND CONTROL BY ENGINEERING ORGANIZATION. SHOULD BE CONTACTED FOR THE LATEST REVISION.

DWN A.HOLT	14NOV2006	Tyco Electronics	Tyco Electronics Harrisburg, PA 17105-3608
CHK W.WELLINSKY	14NOV2006		
APVD W.WELLINSKY	14NOV2006	NAME	40 WAY SHORTING BAR ARM PLUG ASSEMBLY WITHOUT SHORTING BARS LOADED
PRODUCT SPEC	-		
APPLICATION SPEC	-		
WEIGHT	SEE NOTE 5	SIZE A1	CAGE CODE 00779
		DRAWING NO	C-1924170
		RESTRICTED TO	-
CUSTOMER DRAWING		SCALE 3:1	SHEET 1 OF 5 REV F

DIMENSIONS: mm

TOLERANCES UNLESS OTHERWISE SPECIFIED:
0 PLC ±-
1 PLC ±0.3
2 PLC ±0.10
3 PLC ±-
4 PLC ±-
ANGLES ±3°

MATERIAL: SEE CHART ON SHEET 2
FINISH: - -

THIS DRAWING IS UNPUBLISHED. RELEASED FOR PUBLICATION APRIL 20, 2002
© COPYRIGHT APRIL 20, 2002 BY TYCO ELECTRONICS CORPORATION. ALL RIGHTS RESERVED.

LOC	DIST
FX	00

REVISIONS

P	LTR	DESCRIPTION	DATE	DWN	APVD
	-	SEE SHEET 1	-	-	-

6-1924170-5	6-1924170-4	6-1924170-3	6-1924170-2	6-1924170-1	6-1924170-0	5-1924170-9	5-1924170-8	5-1924170-7	5-1924170-6	5-1924170-5	5-1924170-4	5-1924170-3	5-1924170-2	5-1924170-1	5-1924170-0	4-1924170-9	4-1924170-8	4-1924170-7	4-1924170-6	4-1924170-5	4-1924170-4	4-1924170-3	4-1924170-2	4-1924170-1	4-1924170-0	3-1924170-9	3-1924170-8	3-1924170-7	3-1924170-6	3-1924170-5	3-1924170-4	3-1924170-3	3-1924170-2	3-1924170-1	3-1924170-0	2-1924170-9	2-1924170-8	2-1924170-7	2-1924170-6	2-1924170-5	2-1924170-4	2-1924170-3	2-1924170-2	2-1924170-1	2-1924170-0	1-1924170-9	1-1924170-8	1-1924170-7	1-1924170-6	1-1924170-5	1-1924170-4	1-1924170-3	1-1924170-2	1-1924170-1	1-1924170-0	0-1924170-9	0-1924170-8	0-1924170-7	0-1924170-6	0-1924170-5	0-1924170-4	0-1924170-3	0-1924170-2	0-1924170-1				
1	1	1	1	1	1	1	1	1	1	1	1	1	1	1	1	1	1	1	1	1	1	1	1	1	1	1	1	1	1	1	1	1	1	1	1	1	1	1	1	1	1	1	1	1	1	1	1	1	1	1	1	1	1	1	1	1	1	1	1	1	1	1	1	1	6	CAM LEVER	PA66 35% GF	GRAY
																																																																	6	CAM LEVER WITH MODIFIED TAB	PA66 35% GF	GRAY
1	1	1	1	1	1	1	1	1	1	1	1	1	1	1	1	1	1	1	1	1	1	1	1	1	1	1	1	1	1	1	1	1	1	1	1	1	1	1	1	1	1	1	1	1	1	1	1	1	1	1	1	1	1	1	1	1	1	1	1	1	1	1	1	1	5	PERIMETER SEAL	SILICONE	GREEN
1	1	1	1	1	1	1	1	1	1	1	1	1	1	1	1	1	1	1	1	1	1	1	1	1	1	1	1	1	1	1	1	1	1	1	1	1	1	1	1	1	1	1	1	1	1	1	1	1	1	1	1	1	1	1	1	1	1	1	1	1	1	1	1	1	4	GROMMET	SILICONE	BROWN
1	1	1	1	1	1	1	1	1	1	1	1	1	1	1	1	1	1	1	1	1	1	1	1	1	1	1	1	1	1	1	1	1	1	1	1	1	1	1	1	1	1	1	1	1	1	1	1	1	1	1	1	1	1	1	1	1	1	1	1	1	1	1	1	1	3	COVER	PA66 35% GF	BLACK
1	1	1	1	1	1	1	1	1	1	1	1	1	1	1	1	1	1	1	1	1	1	1	1	1	1	1	1	1	1	1	1	1	1	1	1	1	1	1	1	1	1	1	1	1	1	1	1	1	1	1	1	1	1	1	1	1	1	1	1	1	1	1	1	1	2	TPA FOR SHORTING BAR APPLICATIONS	sPS 30% GF	NATURAL
																																																																	PLUG WITH KEYING OPTION "H" AND 6 SHORTING BAR POSITIONS CONFIGURATION	PA66 35% GF	BLACK
1	1	1	1	1	1	1	1	1	1	1	1	1	1	1	1	1	1	1	1	1	1	1	1	1	1	1	1	1	1	1	1	1	1	1	1	1	1	1	1	1	1	1	1	1	1	1	1	1	1	1	1	1	1	1	1	1	1	1	1	1	1	1	1	1	1	PLUG WITH KEYING OPTION "G" AND 6 SHORTING BAR POSITIONS CONFIGURATION	PA66 35% GF	BLACK
QUANTITY																																																																ITEM	DESCRIPTION	MATERIAL	FINISH/COLOR

																					1-1924171-0	0-1924171-9	0-1924171-8	0-1924171-7	0-1924171-6	0-1924171-5	0-1924171-4	0-1924171-3	0-1924171-2	0-1924171-1	9-1924170-9	9-1924170-8	9-1924170-7	9-1924170-6	9-1924170-5	9-1924170-4	9-1924170-3	9-1924170-2	9-1924170-1	9-1924170-0	8-1924170-9	8-1924170-8	8-1924170-7	8-1924170-6	8-1924170-5	8-1924170-4	8-1924170-3	8-1924170-2	8-1924170-1	8-1924170-0	7-1924170-9	7-1924170-8	7-1924170-7	7-1924170-6	7-1924170-5	7-1924170-4	7-1924170-3	7-1924170-2	7-1924170-1	7-1924170-0	6-1924170-9	6-1924170-8	6-1924170-7	6-1924170-6				
																					1	1	1	1	1	1	1	1	1	1	1	1	1	1	1	1	1	1	1	1	1	1	1	1	1	1	1	1	1	1	1	1	1	1	1	1	1	1	1	1	1	1	1	1	6	CAM LEVER	PA66 35% GF	GRAY
																																																																	6	CAM LEVER WITH MODIFIED TAB	PA66 35% GF	GRAY
																					1	1	1	1	1	1	1	1	1	1	1	1	1	1	1	1	1	1	1	1	1	1	1	1	1	1	1	1	1	1	1	1	1	1	1	1	1	1	1	1	1	1	1	1	5	PERIMETER SEAL	SILICONE	GREEN
																					1	1	1	1	1	1	1	1	1	1	1	1	1	1	1	1	1	1	1	1	1	1	1	1	1	1	1	1	1	1	1	1	1	1	1	1	1	1	1	1	1	1	1	1	4	GROMMET	SILICONE	BROWN
																					1	1	1	1	1	1	1	1	1	1	1	1	1	1	1	1	1	1	1	1	1	1	1	1	1	1	1	1	1	1	1	1	1	1	1	1	1	1	1	1	1	1	1	1	3	COVER	PA66 35% GF	BLACK
																					1	1	1	1	1	1	1	1	1	1	1	1	1	1	1	1	1	1	1	1	1	1	1	1	1	1	1	1	1	1	1	1	1	1	1	1	1	1	1	1	1	1	1	1	2	TPA FOR SHORTING BAR APPLICATIONS	sPS 30% GF	NATURAL
																																																																	1	PLUG WITH KEYING OPTION "H" AND 6 SHORTING BAR POSITIONS CONFIGURATION	PA66 35% GF	BLACK
																					1	1	1	1	1	1	1	1	1	1	1	1	1	1	1	1	1	1	1	1	1	1	1	1	1	1	1	1	1	1	1	1	1	1	1	1	1	1	1	1	1	1	1	1	1	PLUG WITH KEYING OPTION "G" AND 6 SHORTING BAR POSITIONS CONFIGURATION	PA66 35% GF	BLACK
																																																																ITEM	DESCRIPTION	MATERIAL	FINISH/COLOR

ASSEMBLY PART NUMBERS

																						2-1924173-1	2-1924173-0	1-1924173-9	1-1924173-8	1-1924173-7	1-1924173-6	1-1924173-5	1-1924173-4	1-1924173-3	1-1924173-2	1-1924173-1	1-1924173-0	0-1924173-9	0-1924173-8	0-1924173-7	0-1924173-6	0-1924173-5	0-1924173-4	0-1924173-3	0-1924173-2	0-1924173-1							1-1924172-6	1-1924172-5	1-1924172-4	1-1924172-3	1-1924172-2	1-1924172-1	1-1924172-0	0-1924172-9	0-1924172-8	0-1924172-7	0-1924172-6	0-1924172-5	0-1924172-4	0-1924172-3	0-1924172-2	0-1924172-1				
																																																																	6	CAM LEVER	PA66 35% GF	GRAY
																						1	1	1	1	1	1	1	1	1	1	1	1	1	1	1	1	1	1	1	1	1							1	1	1	1	1	1	1	1	1	1	1	1	1	1	1	1	6	CAM LEVER WITH MODIFIED TAB	PA66 35% GF	GRAY
																						1	1	1	1	1	1	1	1	1	1	1	1	1	1	1	1	1	1	1	1	1							1	1	1	1	1	1	1	1	1	1	1	1	1	1	1	1	5	PERIMETER SEAL	SILICONE	GREEN
																						1	1	1	1	1	1	1	1	1	1	1	1	1	1	1	1	1	1	1	1	1							1	1	1	1	1	1	1	1	1	1	1	1	1	1	1	1	4	GROMMET	SILICONE	BROWN
																						1	1	1	1	1	1	1	1	1	1	1	1	1	1	1	1	1	1	1	1	1							1	1	1	1	1	1	1	1	1	1	1	1	1	1	1	1	3	COVER	PA66 35% GF	BLACK
																						1	1	1	1	1	1	1	1	1	1	1	1	1	1	1	1	1	1	1	1	1							1	1	1	1	1	1	1	1	1	1	1	1	1	1	1	1	2	TPA FOR SHORTING BAR APPLICATIONS	sPS 30% GF	NATURAL
																						1	1	1	1	1	1	1	1	1	1	1	1	1	1	1	1	1	1	1	1	1																							1	PLUG WITH KEYING OPTION "H" AND 6 SHORTING BAR POSITIONS CONFIGURATION	PA66 35% GF	BLACK
																																																	1	1	1	1	1	1	1	1	1	1	1	1	1	1	1	1	1	PLUG WITH KEYING OPTION "G" AND 6 SHORTING BAR POSITIONS CONFIGURATION	PA66 35% GF	BLACK
QUANTITY																																																																	ITEM	DESCRIPTION	MATERIAL	FINISH/COLOR

THIS DRAWING IS A CONTROLLED DOCUMENT FOR TYCO ELECTRONICS CORPORATION IT IS SUBJECT TO CHANGE AND THE CONTROLLING ENGINEERING ORGANIZATION SHOULD BE CONTACTED FOR THE LATEST REVISION.

DIMENSIONS: mm

TOLERANCES UNLESS OTHERWISE SPECIFIED:
0 PLC ±-
1 PLC ±0.3
2 PLC ±0.10
3 PLC ±-
4 PLC ±-
ANGLES ±3°

MATERIAL SEE CHART ON SHEET 2

FINISH - -

DWN A.HOLT 14NOV2006
CHK W.WELLINSKY 14NOV2006
APVD W.WELLINSKY 14NOV2006
PRODUCT SPEC -
APPLICATION SPEC -
WEIGHT -

Tyco Electronics
Tyco Electronics
Harrisburg, PA 17105-3608

NAME
40 WAY SHORTING BAR ARM
PLUG ASSEMBLY
WITHOUT SHORTING BARS LOADED

SIZE A | CAGE CODE 00779 | DRAWING NO C-1924170 | RESTRICTED TO -

CUSTOMER DRAWING | SCALE 3:1 | SHEET 2 OF 5 | REV F

AMP 4805 REV 31MAR2000

THIS DRAWING IS UNPUBLISHED. RELEASED FOR PUBLICATION APRIL 20, 2002
© COPYRIGHT APRIL 20, 2002 BY TYCO ELECTRONICS CORPORATION. ALL RIGHTS RESERVED.

LOC	DIST
FX	00

REVISIONS

P	LTR	DESCRIPTION	DATE	DWN	APVD
	-	SEE SHEET 1	-	-	-

PIN OUT CHART

BLANK CAVITIES INDICATE OPEN TERMINAL HOLE POSITIONS

CAVITIES WITH A NUMERIC SYMBOL INDICATE CLOSED TERMINAL HOLE POSITIONS

TERMINAL HOLE POSITION

1	2	3	4	5	6	7	8	9	10	11	12	13	14	15	16	17	18	19	20	21	22	23	24	25	26	27	28	29	30	31	32	33	34	35	36	37	38	39	40	ASSEMBLY PART NUMBER	KEYING OPTION
										11	12																													0-1924170-1	G
1	2	3	4	5	6	7	8	9	10	11	12	13	14	15	16	17	18			21	22					27	28	29	30					35	36	37	38	39	40	0-1924170-2	G
		3	4	5	6	7	8	9	10	11	12	13	14	15	16																			35	36	37	38	39	40	0-1924170-3	G
						7	8	9	10	11	12	13	14	15	16																			35	36	37	38	39	40	0-1924170-4	G
1	2	3	4	5	6	7	8	9	10	11	12	13	14	15	16					21	22					27	28	29	30					35	36	37	38	39	40	0-1924170-5	G
1	2	3	4	5	6	7	8	9	10	11	12	13	14										24											35	36					0-1924170-6	G
1	2	3	4	5	6	7	8	9	10	11	12	13	14	15	16								24					29	30					35	36					0-1924170-7	G
						7	8	9	10	11	12																							35	36	37	38	39	40	0-1924170-8	G
		3	4	5	6	7	8	9	10	11	12																							35	36	37	38	39	40	0-1924170-9	G
1	2	3	4	5	6	7	8	9	10	11	12	13	14	15	16											27	28	29	30					35	36	37	38	39	40	1-1924170-0	G
						7	8	9	10	11	12						18																	35	36	37	38	39	40	1-1924170-1	G
1	2	3	4			7	8	9	10	11	12	13	14	15	16					21	22					27	28	29	30					35	36	37	38	39	40	1-1924170-2	G
1	2					7	8	9	10	11	12									21	22													35	36	37	38	39	40	1-1924170-3	G
		3	4	5	6	7	8	9	10	11	12	13	14	15	16	17	18																	35	36	37	38	39	40	1-1924170-4	G
1	2	3	4			7	8	9	10	11	12	13	14	15	16	17	18			21	22					27	28	29	30					35	36	37	38	39	40	1-1924170-5	G
1	2					7	8	9	10	11	12					17	18			21	22													35	36	37	38	39	40	1-1924170-6	G
1	2	3	4	5	6	7	8	9	10	11	12	13	14	15	16	17	18			21	22	23	24	25	26	27	28	29	30	31	32	33	34	35	36	37	38	39	40	1-1924170-7	G
		3	4	5	6	7	8	9	10	11	12	13	14	15	16	17	18									27	28	29	30					35	36	37	38	39	40	1-1924170-8	G
						7	8	9	10	11	12																													1-1924170-9	G
1	2	3	4	5	6	7	8	9	10	11	12	13	14	15	16	17	18			21	22	23	24	25	26	27	28	29	30					35	36	37	38	39	40	2-1924170-0	G
1	2	3	4	5	6	7	8	9	10	11	12	13	14	15	16					21	22					27	28	29	30									39	40	2-1924170-1	G
						7	8	9	10	11	12	13	14	15	16																							39	40	2-1924170-2	G
		3	4	5	6	7	8	9	10	11	12	13	14	15	16																							39	40	2-1924170-3	G
1	2					7	8	9	10	11	12					17	18			21	22	23	24	25	26									35	36	37	38	39	40	2-1924170-4	G
1	2					7	8	9	10	11	12					17	18			21	22	23	24											35	36	37	38	39	40	2-1924170-5	G
						7	8	9	10	11	12	13	14	15	16	17	18																	35	36	37	38	39	40	2-1924170-6	G
						7	8	9	10	11	12	13	14	15	16	17	18								26									35	36	37	38	39	40	2-1924170-7	G
						7	8	9	10	11	12	13	14	15	16	17	18																					39	40	2-1924170-8	G
		3	4			7	8	9	10	11	12	13	14	15	16											27	28	29	30		32					37	38	39	40	2-1924170-9	G
										11	12																				32					37	38	39	40	3-1924170-0	G
1	2					7	8	9	10	11	12	13	14	15	16	17	18			21	22					27	28	29	30					35	36	37	38	39	40	3-1924170-1	G
1	2					7	8	9	10	11	12	13	14	15	16					21	22					27	28	29	30					35	36	37	38	39	40	3-1924170-2	G
1	2					7	8	9	10	11	12	13	14	15	16	17	18			21	22													35	36	37	38	39	40	3-1924170-3	G
1	2					7	8	9	10	11	12									21	22					27	28	29	30					35	36	37	38	39	40	3-1924170-4	G
1	2					7	8	9	10	11	12	13	14	15	16					21	22													35	36	37	38	39	40	3-1924170-5	G
1	2			5	6	7	8	9	10	11	12	13	14	15	16	17	18			21	22					27	28	29	30					35	36	37	38	39	40	3-1924170-6	G
1	2			5	6	7	8	9	10	11	12	13	14	15	16					21	22		24					29	30					35	36	37	38	39	40	3-1924170-7	G
1	2					7	8	9	10	11	12									21	22		24											35	36	37	38	39	40	3-1924170-8	G
1	2	3	4	5	6	7	8	9	10	11	12	13	14	15	16	17	18			21	22	23	24			27	28	29	30	31	32	33	34	35	36	37	38	39	40	3-1924170-9	G
										11	12							19	20				24													37	38	39	40	4-1924170-0	G
				5	6	7	8	9	10	11	12	13	14	15	16			19	20				24			27	28	29	30							37	38	39	40	4-1924170-1	G
1	2			5	6	7	8	9	10	11	12	13	14	15	16					21	22		24			27	28	29	30					35	36	37	38	39	40	4-1924170-2	G
1	2	3	4	5	6	7	8			11	12	13	14	15	16			19	20	21	22	23	24			27	28	29	30	31	32			35	36	37	38	39	40	4-1924170-3	G
1	2	3	4	5	6					11	12	13	14	15	16					21	22	23	24							31	32			35	36	37	38	39	40	4-1924170-4	G
1	2	3	4	5	6	7	8	9	10	11	12	13	14	15	16	17	18			21	22													35	36	37	38	39	40	4-1924170-5	G
1	2	3	4	5	6	7	8	9	10	11	12	13	14	15	16					21	22	23	24	25	26	27	28	29	30	31	32	33	34			37	38	39	40	4-1924170-6	G
1	2		4		6	7	8	9	10	11	12	13	14	15	16	17	18			21	22	23	24			27	28	29	30					35	36	37	38	39	40	4-1924170-7	G
1	2	3	4	5	6	7	8	9	10	11	12	13	14	15	16					21	22		24			27	28	29	30					35	36	37	38	39	40	4-1924170-8	G
1	2	3	4	5	6	7	8	9	10	11	12	13	14	15	16	17	18			21	22	23	24			27	28	29	30					35	36	37	38	39	40	4-1924170-9	G
						7	8	9	10	11	12	13	14	15	16	17	18					23	24											35	36	37	38	39	40	5-1924170-0	G
		3	4	5	6	7	8	9	10	11	12	13	14	15	16											27	28	29	30					35	36	37	38	39	40	5-1924170-1	G
						7	8	9	10	11	12												24											35	36	37	38	39	40	5-1924170-2	G
						7	8	9	10	11	12	13	14	15	16			19	20																	37	38	39	40	5-1924170-3	G
						7	8	9	10	11	12												24																	5-1924170-4	G
						7	8	9	10	11	12	13	14	15	16	17	18					23	24		26									35	36	37	38	39	40	5-1924170-5	G
						7	8	9	10	11	12	13	14	15	16	17	18					23	24	25	26									35	36	37	38	39	40	5-1924170-6	G
1	2			5	6	7	8	9	10	11	12	13	14	15	16	17	18			21	22	23	24			27	28	29	30					35	36	37	38	39	40	5-1924170-7	G
								9	10	11	12				16	17	18	19							26	27	28	29					34	35	36	37	38	39	40	5-1924170-8	G
								9	10	11	12																											39	40	5-1924170-9	G
1	2	3	4	5	6	7	8	9	10	11	12	13	14	15	16					21	22					27	28	29	30		32					37	38	39	40	6-1924170-0	G
		3	4	5	6	7	8	9	10	11	12	13	14	15	16				20	21																37	38	39	40	6-1924170-1	G
		3	4	5	6	7	8	9	10	11	12	13	14	15	16																					37	38			6-1924170-2	G
		3	4	5	6	7	8	9	10	11	12	13	14	15	16											27	28	29	30							37	38			6-1924170-3	G
						7	8	9	10	11	12																				32					37	38	39	40	6-1924170-4	G
						7	8	9	10	11	12												24													37	38	39	40	6-1924170-5	G

THIS DRAWING IS A CONTROLLED DOCUMENT FOR TYCO ELECTRONICS CORPORATION. IT IS SUBJECT TO CHANGE AND THE CONTROLLING ENGINEERING ORGANIZATION SHOULD BE CONTACTED FOR THE LATEST REVISION.

DIMENSIONS: mm

TOLERANCES UNLESS OTHERWISE SPECIFIED:
0 PLC ±-
1 PLC ±0.3
2 PLC ±0.10
3 PLC ±-
4 PLC ±-
ANGLES ±3°

MATERIAL: SEE CHART ON SHEET 2
FINISH: -
-

DWN A.HOLT	14NOV2006	Tyco Electronics — Tyco Electronics, Harrisburg, PA 17105-3608
CHK W.WELLINSKY	14NOV2006	
APVD W.WELLINSKY	14NOV2006	NAME: 40 WAY SHORTING BAR ARM PLUG ASSEMBLY WITHOUT SHORTING BARS LOADED
PRODUCT SPEC -		
APPLICATION SPEC -		
WEIGHT -		SIZE A1 · CAGE CODE 00779 · DRAWING NO C-1924170 · RESTRICTED TO -
CUSTOMER DRAWING		SCALE 3:1 · SHEET 3 OF 5 · REV F

THIS DRAWING IS UNPUBLISHED. RELEASED FOR PUBLICATION APRIL 20, 2002
© COPYRIGHT APRIL 20, 2002 BY TYCO ELECTRONICS CORPORATION. ALL RIGHTS RESERVED.

LOC	DIST
FX	00

REVISIONS

P	LTR	DESCRIPTION	DATE	DWN	APVD
	-	SEE SHEET 1	-	-	-

PIN OUT CHART

BLANK CAVITIES INDICATE OPEN TERMINAL HOLE POSITIONS

CAVITIES WITH A NUMERIC SYMBOL INDICATE CLOSED TERMINAL HOLE POSITIONS

TERMINAL HOLE POSITION																																								ASSEMBLY PART NUMBER	KEYING OPTION
1	2	3	4	5	6	7	8	9	10	11	12	13	14	15	16	17	18	19	20	21	22	23	24	25	26	27	28	29	30	31	32	33	34	35	36	37	38	39	40		
				5	6	7	8	9	10	11	12	13	14	15	16								24			27	28	29	30							37	37	39	40	6-1924170-6	G
		3	4	5	6	7	8	9	10	11	12	13	14	15	16	17	18					23	24		26									35	36	37	37	39	40	6-1924170-7	G
		3	4	5	6	7	8	9	10	11	12	13	14	15	16								24			27	28	29	30					35	36	37	37	39	40	6-1924170-8	G
		3	4	5	6	7	8	9	10	11	12	13	14	15	16								24											35	36	37	37	39	40	6-1924170-9	G
1	2			5	6	7	8	9	10	11	12	13	14	15	16					21	22		24			27	28	29	30							37	38	39	40	7-1924170-0	G
				5	6	7	8	9	10	11	12	13	14	15	16								24			27	28	29	30					35	36	37	38	39	40	7-1924170-1	G
1	2					7	8	9	10	11	12	13	14	15	16					21	22		24											35	36	37	38	39	40	7-1924170-2	G
1	2					7	8	9	10	11	12	13	14	15	16					21	22		24			27	28	29	30					35	36	37	38	39	40	7-1924170-3	G
										11	12												24																	7-1924170-4	G
1	2									11	12	13	14	15	16								24																	7-1924170-5	G
										11	12																				32					37	38	39	40	7-1924170-6	G
										11	12							19	20				24																	7-1924170-7	G
										11	12							19	20													33	34							7-1924170-8	G
						7	8	9	10	11	12							19	20				24																	7-1924170-9	G
						7	8	9	10	11	12							19	20													33	34							8-1924170-0	G
						7	8	9	10	11	12																			31	32					37	38	39	40	8-1924170-1	G
								9	10	11	12					17	18	19	20	21	22		24		26							33	34	35	36	37	38	39	40	8-1924170-2	G
				5	6	7	8	9	10	11	12	13	14	15	16																					37	38			8-1924170-3	G
		3	4	5	6	7	8	9	10	11	12	13	14	15	16			19	20													33	34			37	38	39	40	8-1924170-4	G
						7	8	9	10	11	12	13	14	15	16			19	20													33	34			37	38	39	40	8-1924170-5	G
1	2					7	8	9	10	11	12		14	15		17	18			21	22			25	26	27	28	29	30	31	32	33	34	35	36	37	38			8-1924170-6	G
1	2					7	8	9	10			13	14	15	16					21	22		24											35	36	37	38	39	40	8-1924170-7	G
1	2					7	8	9	10			13	14	15	16					21	22		24			27	28	29	30					35	36	37	38	39	40	8-1924170-8	G
1	2	3	4			7	8	9	10	11	12		14	15		17	18			21	22			25	26	27	28	29	30	31	32	33	34	35	36	37	38			8-1924170-9	G
1	2	3	4			7	8	9	10	11	12		14	15		17	18			21	22	23	24	25	26	27	28	29	30	31	32			35	36	37	38			9-1924170-0	G
1	2	3	4	5	6	7	8	9	10	11	12	13	14	15	16					21	22		24			27	28	29	30					35	36	37	38			9-1924170-1	G
		3	4	5	6					11	12												24											35	36	37	38	39	40	9-1924170-2	G
						7	8	9	10	11	12												24											35	36	37	38			9-1924170-3	G
										11	12												24											35	36	37	38	39	40	9-1924170-4	G
		3	4	5	6					11	12							19	20																			39	40	9-1924170-5	G
1	2	3	4	5	6	7	8	9	10	11	12	13	14	15	16			19	20	21	22	23	24		26	27	28	29	30					35	36	37	38	39	40	9-1924170-6	G
						7	8	9	10	11	12	13	14	15	16			19	20				24									33	34			37	38	39	40	9-1924170-7	G
		3	4	5	6	7	8	9	10	11	12	13	14	15	16			19	20				24									33	34			37	38	39	40	9-1924170-8	G
		3	4	5	6	7	8	9	10	11	12	13	14	15	16			19	20				24													37	38	39	40	9-1924170-9	G
						7	8	9	10	11	12	13	14	15	16			19	20				24													37	38	39	40	0-1924171-1	G
										11	12							19	20																					0-1924171-2	G
		3	4	5	6	7	8	9	10	11	12							19	20				24														39	40	0-1924171-3	G
						7	8	9	10	11	12																					33	34							0-1924171-4	G
										11	12																					33	34							0-1924171-5	G
1	2	3	4	5	6	7	8	9	10	11	12	13	14	15	16					21	22		24											35	36	37	38	39	40	0-1924171-6	G
						7	8	9	10	11	12												24											35	36					0-1924171-7	G
										11	12	13	14	15	16								24																	0-1924171-8	G
1	2	3	4	5	6	7	8	9	10	11	12	13	14	15	16			19	20	21	22	23	24		26	27	28	29	30					35	36	37	38		40	0-1924171-9	G
1	2	3	4	5	6	7	8	9	10	11	12	13	14	15	16			19	20	21			24		26	27	28	29	30					35	36	37	38	39	40	1-1924171-0	G

THIS DRAWING IS A CONTROLLED DOCUMENT FOR TYCO ELECTRONICS CORPORATION
IT IS SUBJECT TO CHANGE AND THE CONTROLLING ENGINEERING ORGANIZATION
SHOULD BE CONTACTED FOR THE LATEST REVISION.

DIMENSIONS: mm

TOLERANCES UNLESS OTHERWISE SPECIFIED:
0 PLC ±-
1 PLC ±0.3
2 PLC ±0.10
3 PLC ±-
4 PLC ±-
ANGLES ±3°

MATERIAL: SEE CHART ON SHEET 2

FINISH: - -

DWN	A.HOLT	14NOV2006
CHK	W.WELLINSKY	14NOV2006
APVD	W.WELLINSKY	14NOV2006

PRODUCT SPEC: -

APPLICATION SPEC: -

WEIGHT: -

Tyco Electronics
Tyco Electronics
Harrisburg, PA 17105-3608

NAME: 40 WAY SHORTING BAR ARM PLUG ASSEMBLY WITHOUT SHORTING BARS LOADED

SIZE	CAGE CODE	DRAWING NO	RESTRICTED TO
A1	00779	C-1924170	-

CUSTOMER DRAWING

SCALE	SHEET	OF	REV
3:1	4	5	F

THIS DRAWING IS UNPUBLISHED. RELEASED FOR PUBLICATION APRIL 20, 2002
© COPYRIGHT APRIL 20, 2002 BY TYCO ELECTRONICS CORPORATION. ALL RIGHTS RESERVED.

LOC	DIST
FX	00

REVISIONS

P	LTR	DESCRIPTION	DATE	DWN	APVD
	-	SEE SHEET 1	-	-	-

PIN OUT CHART

BLANK CAVITIES INDICATE OPEN TERMINAL HOLE POSITIONS

CAVITIES WITH A NUMERIC SYMBOL INDICATE CLOSED TERMINAL HOLE POSITIONS

TERMINAL HOLE POSITION

1	2	3	4	5	6	7	8	9	10	11	12	13	14	15	16	17	18	19	20	21	22	23	24	25	26	27	28	29	30	31	32	33	34	35	36	37	38	39	40	ASSEMBLY PART NUMBER	KEYING OPTION
										11	12																													0-1924172-1	G
1	2	3	4	5	6	7	8	9	10	11	12	13	14	15	16	17	18			21	22					27	28	29	30					35	36	37	38	39	40	0-1924172-2	G
		3	4	5	6	7	8	9	10	11	12	13	14	15	16																			35	36	37	38	39	40	0-1924172-3	G
						7	8	9	10	11	12	13	14	15	16																			35	36	37	38	39	40	0-1924172-4	G
						7	8	9	10	11	12																							35	36	37	38	39	40	0-1924172-5	G
1	2	3	4	5	6	7	8	9	10	11	12	13	14	15	16					21	22		24			27	28	29	30					35	36	37	38	39	40	0-1924172-6	G
						7	8	9	10	11	12					17	18																	35	36	37	38	39	40	0-1924172-7	G
						7	8	9	10	11	12	13	14	15	16	17	18																	35	36	37	38	39	40	0-1924172-8	G
1	2	3	4	5	6	7	8	9	10	11	12	13	14	15	16					21	22					27	28	29	30					35	36	37	38	39	40	0-1924172-9	G
						7	8	9	10	11	12												24											35	36	37	38	39	40	1-1924172-0	G
						7	8	9	10	11	12	13	14	15	16								24											35	36	37	38	39	40	1-1924172-1	G
1	2	3	4	5	6	7	8	9	10	11	12	13	14	15	16			19	20	21	22	23	24		26	27	28	29	30					35	36	37	38	39	40	1-1924172-2	G
1	2					7	8	9	10	11	12					17	18			21	22													35	36	37	38	39	40	1-1924172-3	G
		3	4	5	6					11	12												24											35	36	37	38	39	40	1-1924172-4	G
		3	4	5	6																		24											35	36	37	38	39		1-1924172-5	G
		3	4	5	6					11	12												24											35	36	37	38	39		1-1924172-6	G

PIN OUT CHART

BLANK CAVITIES INDICATE OPEN TERMINAL HOLE POSITIONS

CAVITIES WITH A NUMERIC SYMBOL INDICATE CLOSED TERMINAL HOLE POSITIONS

TERMINAL HOLE POSITION

1	2	3	4	5	6	7	8	9	10	11	12	13	14	15	16	17	18	19	20	21	22	23	24	25	26	27	28	29	30	31	32	33	34	35	36	37	38	39	40	ASSEMBLY PART NUMBER	KEYING OPTION
										11	12																													0-1924173-1	H
						7	8	9	10	11	12							19	20				24													37	38	39	40	0-1924173-2	H
				5	6	7	8	9	10	11	12	13	14	15	16			19	20				24			27	28	29	30							37	38	39	40	0-1924173-3	H
1	2	3	4					9	10	11	12	13	14	15	16					21	22					27	28	29	30									39	40	0-1924173-4	H
1	2	3	4	5	6	7	8	9	10	11	12	13	14	15	16					21	22	23	24	25	26	27	28	29	30	31	32	33	34			37	38	39	40	0-1924173-5	H
								9	10	11	12																											39	40	0-1924173-6	H
						7	8	9	10	11	12												24											35	36	37	38	39	40	0-1924173-7	H
						7	8	9	10	11	12												24																	0-1924173-8	H
1	2	3	4	5	6	7	8	9	10	11	12	13	14	15	16				20	21	22					27	28	29	30	31	32					37	38	39	40	0-1924173-9	H
1	2	3	4	5	6	7	8	9	10	11	12	13	14	15	16					21	22					27	28	29	30	31	32					37	38	39	40	1-1924173-0	H
1	2	3	4	5	6	7	8	9	10	11	12	13	14	15	16					21	22		24			27	28	29	30					35	36	37	38	39	40	1-1924173-1	H
1	2	3	4	5	6	7	8	9	10	11	12	13	14	15	16					21	22		24			27	28	29	30							37	38	39	40	1-1924173-2	H
								9	10	11	12					17	18	19	20	21	22		24		26							33	34	35	36	37	38	39	40	1-1924173-3	H
1	2					7	8	9	10	11	12	13	14	15	16					21	22					27	28	29	30	31	32					37	38	39	40	1-1924173-4	H
1	2	3	4	5	6	7	8	9	10	11	12	13	14	15	16	17	18			21	22					27	28	29	30					35	36	37	38	39	40	1-1924173-5	H
1	2	3	4	5	6	7	8	9	10	11	12	13	14	15	16					21	22		24			27	28	29	30					35	36	37	38			1-1924173-6	H
1	2					7	8	9	10	11	12	13	14	15	16					21	22		24			27	28	29	30					35	36	37	38	39	40	1-1924173-7	H
1	2	3	4	5	6	7	8	9	10	11	12	13	14	15	16					21		23		25	26	27	28	29	30	31	32	33	34			37	38	39	40	1-1924173-8	H
		3	4	5	6					11	12							19	20																			39	40	1-1924173-9	H
		3	4	5	6					11	12							19	20				24															39		2-1924173-0	H
		3	4	5	6					11	12							19	20				24															39	40	2-1924173-1	H

THIS DRAWING IS A CONTROLLED DOCUMENT FOR TYCO ELECTRONICS CORPORATION. IT IS SUBJECT TO CHANGE AND THE CONTROLLING ENGINEERING ORGANIZATION SHOULD BE CONTACTED FOR THE LATEST REVISION.

DIMENSIONS: mm

TOLERANCES UNLESS OTHERWISE SPECIFIED:
0 PLC ±-
1 PLC ±0.3
2 PLC ±0.10
3 PLC ±-
4 PLC ±-
ANGLES ±1°

MATERIAL: SEE CHART ON SHEET 2
FINISH: - -

DWN A. HOLT 14NOV2006
CHK W. WELLINSKY 14NOV2006
APVD W. WELLINSKY 14NOV2006
PRODUCT SPEC -
APPLICATION SPEC -
WEIGHT -

Tyco Electronics
Tyco Electronics
Harrisburg, PA 17105-3608

NAME
40 WAY SHORTING BAR ARM
PLUG ASSEMBLY
WITHOUT SHORTING BARS LOADED

SIZE A1 | CAGE CODE 00779 | DRAWING NO C-1924170 | RESTRICTED TO -

CUSTOMER DRAWING | SCALE 3:1 | SHEET 5 OF 5 | REV F

Mouser Electronics

Authorized Distributor

Click to View Pricing, Inventory, Delivery & Lifecycle Information:

TE Connectivity:

1924172-5