THIS DRAWING IS UNPUBLISHED. RELEASED FOR PUBLICATION 20
© COPYRIGHT 20 BY TYCO ELECTRONICS CORPORATION, ALL RIGHTS RESERVED.

LOC	DIST
FT	0

REVISIONS

P	LTR	DESCRIPTION	DATE	DWN	APVD
	1	-	10DEC2008	SS	CR

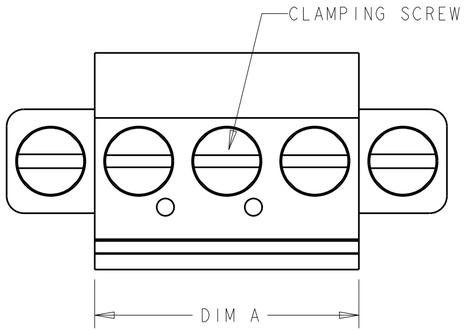

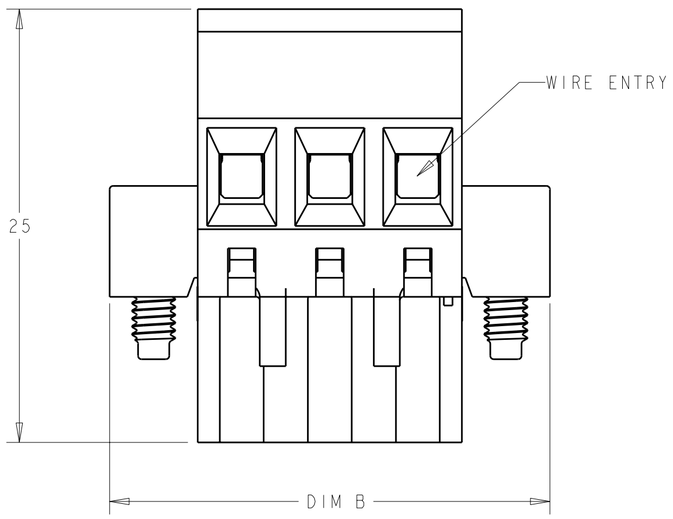

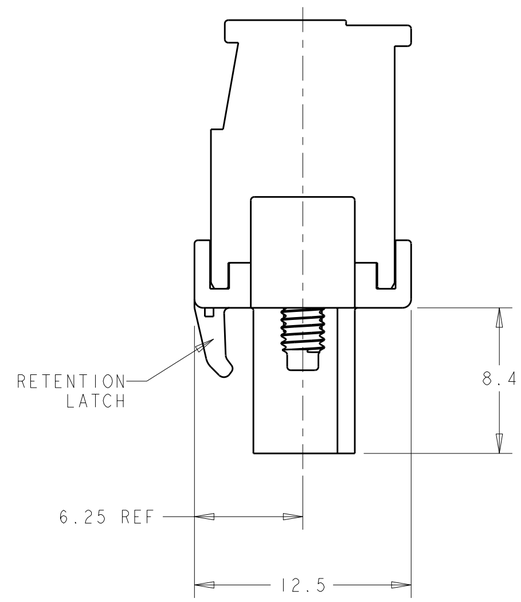

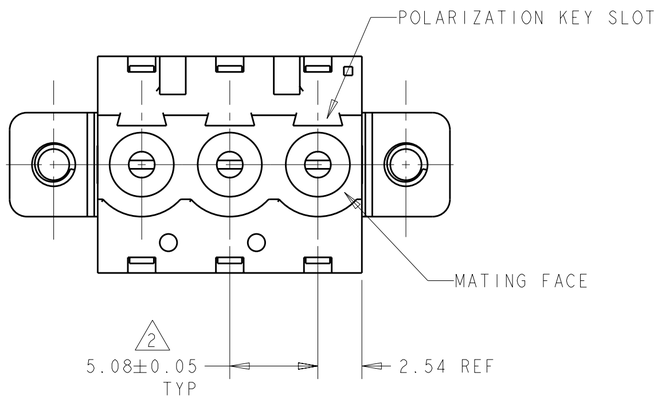

1. MATERIALS AND FINISH:
   HOUSING: PA 6-6, UL 94-V0, COLOR: DK GRAY.
   CLAMP: BRASS, NICKEL PLATED.
   CONTACT SPRING: PHOSPHOR BRONZE, TIN PLATED.
   CLAMPING SCREW: M3, BRASS, NICKEL PLATED.

2. NOT CUMULATIVE TOLERANCE.

3. WIRE SIZE RANGE: 12 - 30 AWG

THIS PRINT IS
PRELIMINARY
THE INFORMATION CONTAINED IN THIS DOCUMENT IS CONFIDENTIAL AND PROPRIETARY TO TYCO ELECTRONICS

DO NOT REPRODUCE OR DISTRIBUTE
DESIGN IS SUBJECT TO CHANGE WITHOUT NOTICE

25.40	15.24	3	1986487-3
B	A	POSN	PART NUMBER

THIS DRAWING IS A CONTROLLED DOCUMENT FOR TYCO ELECTRONICS CORPORATION. IT IS SUBJECT TO CHANGE AND THE CONTROLLING ENGINEERING ORGANIZATION SHOULD BE CONTACTED FOR THE LATEST REVISION.

DIMENSIONS: mm

TOLERANCES UNLESS OTHERWISE SPECIFIED:
0 PLC ±0
1 PLC ±.3
2 PLC ±.25
3 PLC ±0
4 PLC ±0
ANGLES ±2°

MATERIAL 1 -
FINISH 1 -

DWN S SCHLEGEL 10DEC2008
CHK C RICHARD 10DEC2008
APVD C RICHARD 10DEC2008
PRODUCT SPEC -
APPLICATION SPEC -
WEIGHT -

Tyco Electronics
Tyco Electronics
Harrisburg, PA 17105-3608

PRELIMINARY

NAME TERMINAL BLOCK VERTICAL PLUG
RIGHT HAND, W/ LOCKING SCREW
5.08mm PITCH

SIZE	CAGE CODE	DRAWING NO	RESTRICTED TO
A2	00779	C-1986487	-

CUSTOMER DRAWING | SCALE 3:1 | SHEET 1 OF 1 | REV 1

AMP 1471-9 REV 31MAR2000

Pro/ENGINEER DRAWING