THIS DRAWING IS UNPUBLISHED. RELEASED FOR PUBLICATION 1997
© COPYRIGHT 1997 BY - ALL RIGHTS RESERVED.

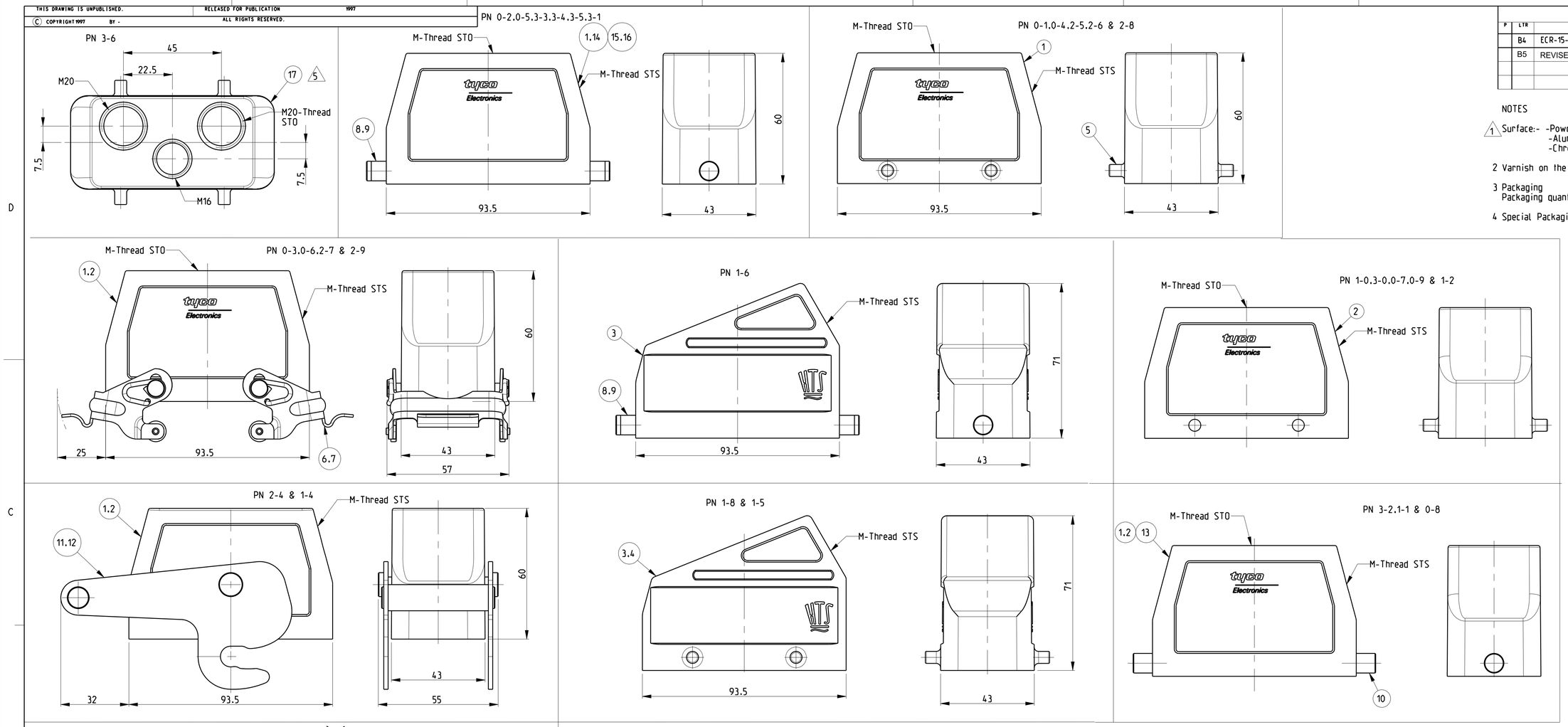

REVISIONS					
P	LTR	DESCRIPTION	DATE	DWN	APVD
	B4	ECR-15-016632	28NOV2016	GCM	MKO
	B5	REVISED PER ECR-16-016780	29JAN2018	SRG	MKO

NOTES

1 Surface:- -Powder varnish grey
-Aluminium oxide+-Varnish black
-Chromital TCP passivation+varnish black

2 Varnish on the inside not necessary

3 Packaging
Packaging quantity 5 piece in a box

4 Special Packaging

PN	DESCRIPTION	MATERIAL	SURFACE	COLOR	ITEM NO	NOTES
3-6	HB Hood	Aluminium		Grey	17	5
3-5	HB-EMV Hood	Aluminium	SEE NOTE 1	Black	16	
3-4	HB Hood	Aluminium		Grey	15	
3-3	HB Hood	Aluminium		Fire red, RAL 3000	14	
3-2	HB-EMV Hood	Aluminium	SEE NOTE 1	With out varnish	13	
2-1	ZB-Clip bolt	Stainless steel	Blank		12	
2-2	ZB-Clip bolt	Steel	Zinc plated	Blue	11	
0-9	LB-Clip bolt	Stainless steel	Blank		10	
2-9	LB-Clip bolt	Steel	Zinc plated	Blue	9	
3-1	LB-Side clip	Steel	Zinc plated	Blue	8	
2-8	VS-Locking Clip	Stainless steel	Blank		7	
2-7	VS-Locking Clip	Steel	Zinc plated	Blue	6	
2-6	VS-Clip bolt	Stainless steel	Blank		5	
1-6	HB-K Hood	Aluminium	Aluminium oxide	Black	4	
3-0	HB Hood	Aluminium		Grey	3	
2-5	HB-K Hood	Aluminium	Aluminium oxide	Black	2	
2-1	HB Hood	Aluminium		Grey	1	
2-2	ORDERING TEXT					
1-8						
1-5						
1-4						
2-4						
1-1						
0-5						
0-8						
0-2						
0-6						
1-2						
0-3						
1-0						
0-4						
0-7						
0-1						

PN	OBSOLETE
3-6	~~HB-16.STO.1.M16-2.M20.G~~
3-5	~~HB-EMV.16.STS-GR.1.M32.G~~
3-4	HB.16.STS-GR.1.M25.G
3-3	~~HB-16.STS-GR.1.M32.G.rot~~
3-2	HB-EMV.16.STS-GR.1.M32.G
0-9	~~HB-K.16.STO-VS.1.M32.G~~
2-9	HB.16.STS-VS.1.M32.G.KM
3-1	HB.16.STS-GR.1.M32.G.KM
2-8	HB.16.STO.1.M32.G.KM
2-7	HB.16.STO-VS.1.M32.G.KM
2-6	HB.16.STO.1.M32.G.KM
1-6	~~HB-KF.16.STS-GR.1.M32.G~~
3-0	~~HB-K.16.STO.1.M25.G~~
2-5	HB.16.STS.1.M25.G
2-1	~~HB-K/KF.Z16.STS-ZB.1.M32.G~~
2-2	~~HB-KF.Z16.STS-ZB.1.M32.G~~
1-8	~~HB-K/KF.16.STS.1.M32.G~~
1-5	~~HB-KF.16.STS.1.M32.G~~
1-4	HB-K/Z.16.STS-ZB.1.M32.G
2-4	HB-Z.16.STS-ZB.1.M32.G
1-1	HB-K.16.STS-GR.1.M32.G
0-5	HB.16.STS-GR.1.M32.G
0-8	~~HB-K.16.STO-GR.1.M32.G~~
0-2	HB.16.STO-GR.1.M32.G
0-6	HB.16.STS-VS.1.M32.G
1-2	HB-K.16.STS.1.M32.G
0-3	HB-K.16.STS.1.M32.G
1-0	HB.16.STS.1.M32.G
0-4	HB-K.16.STO.1.M32.G
0-7	HB.16.STO.1.M32.G
0-1	HB.16.STO.1.M32.G

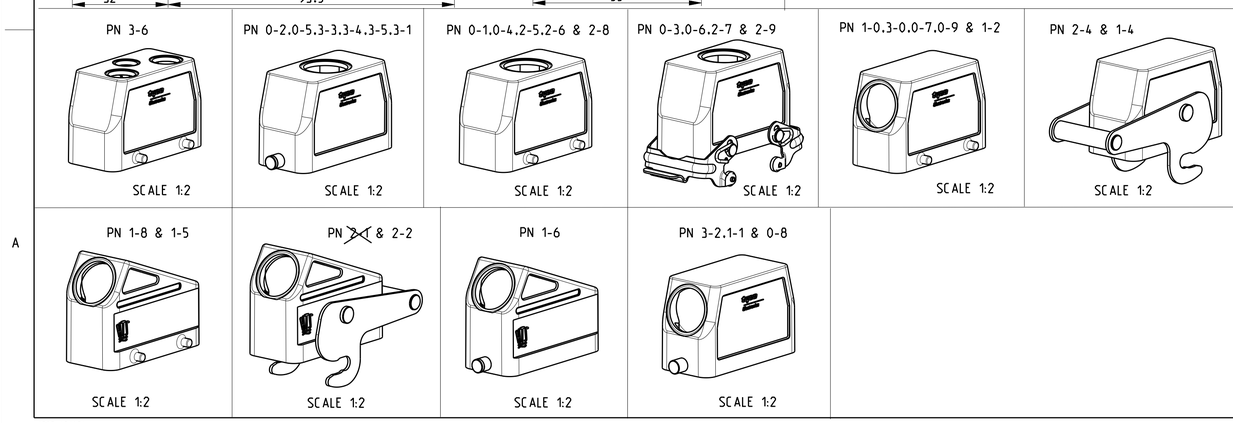

THIS DRAWING IS A CONTROLLED DOCUMENT.

DIMENSIONS: mm

TOLERANCES UNLESS OTHERWISE SPECIFIED:
0 PLC ±
1 PLC ±
2 PLC ±
3 PLC ±
4 PLC ±
ANGLES ±

MATERIAL

FINISH

DWN	Schneider	16.01.2002
CHK	Schweiger	16.01.2002
APVD	-	
PRODUCT SPEC	108-74001 108-74003	
APPLICATION SPEC	114-74001 114-74004	
WEIGHT		

TE Connectivity

NAME: Hood HB.16.M32.G -

SIZE	CAGE CODE	DRAWING NO	RESTRICTED TO
A1	00779	C-1106449	-

CUSTOMER DRAWING

SCALE 1:1 SHEET 1 OF 1 REV B5

4805 (3/13)

Mouser Electronics

Authorized Distributor

Click to View Pricing, Inventory, Delivery & Lifecycle Information:

TE Connectivity:

2-1106449-5