THIS DRAWING IS UNPUBLISHED. RELEASED FOR PUBLICATION -,- .
© COPYRIGHT - By - TE CONNECTIVITY ALL RIGHTS RESERVED.

LOC	DIST
CM	00

REVISIONS

P	LTR	DESCRIPTION	DATE	DWN	APVD
	W2	REVISED PER ECR-15-006687	26OCT2015	NK	NL

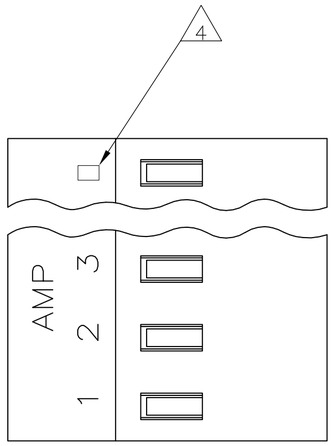

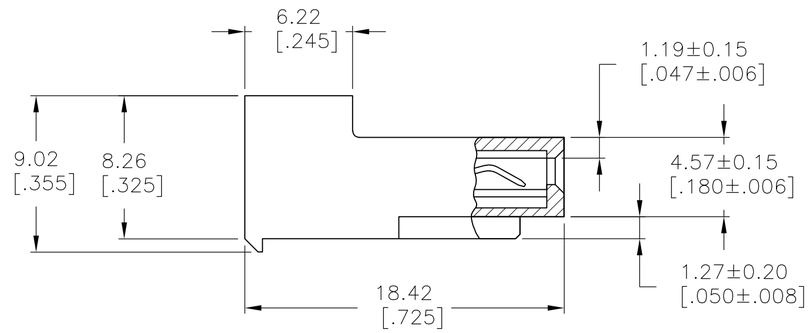

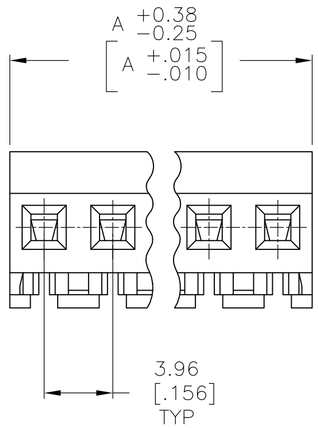

1. MATERIAL: CONNECTOR – NYLON UL94V-2 (RED).
   CONTACTS – 0.30[.012] THICK COPPER ALLOY
   0.00076[.000030] GOLD THK OR 0.00008[.000003] MIN THK
   GOLD FLASH OVER 0.00068[.000027] THK PALLADIUM NICKEL,
   PER TE CONNECTIVITY'S DISCRETION, IN CONTACT
   AREA WITH MATTE TIN FOR 641224-2
   THRU 2-641224-4, MATTE WHISKER MITIGATED
   TIN FOR 3-641224-2 THRU 5-641224-4
   OVER NICKEL UNDERPLATE.

2. CONTACTS ACCEPT 22 AWG WIRE WITH 2.41[.095] MAX INSULATION DIAMETER.

3. CONTACTS MUST ACCEPT 1.14±0.03 [.045±.001] SQUARE POST AND REMAIN LOCKED IN POSITION.

4. IDENTIFICATION NUMBER FOR LAST CIRCUIT MAY NOT APPEAR ON ALL ASSEMBLIES.

5. DIMENSIONS IN BRACKETS ARE IN INCHES.

6. HOUSING FEATURES ARE: CLOSED END WITHOUT LOCKING RAMP.

7. OBSOLETE PARTS: OBSOLETE CIS STREAMLINING PER D.RENAUD/D.SINISI

	DIM A		NO OF CIRCUITS	PART NO
	95.10	[3.744]	24	5-641224-4
	91.14	[3.588]	23	5-641224-3
	87.17	[3.432]	22	5-641224-2
	83.21	[3.276]	21	5-641224-1
	79.25	[3.120]	20	5-641224-0
	75.29	[2.964]	19	4-641224-9
	71.32	[2.808]	18	4-641224-8
	67.36	[2.652]	17	4-641224-7
	63.40	[2.496]	16	4-641224-6
	59.44	[2.340]	15	4-641224-5
	55.47	[2.184]	14	4-641224-4
	51.51	[2.028]	13	4-641224-3
	47.55	[1.872]	12	4-641224-2
	43.59	[1.716]	11	4-641224-1
	39.62	[1.560]	10	4-641224-0
	35.66	[1.404]	9	3-641224-9
	31.70	[1.248]	8	3-641224-8
	27.74	[1.092]	7	3-641224-7
	23.77	[.936]	6	3-641224-6
	19.81	[.780]	5	3-641224-5
	15.85	[.624]	4	3-641224-4
	11.89	[.468]	3	3-641224-3
	7.92	[.312]	2	3-641224-2
7 SUPERSEDED	95.10	[3.744]	24	~~2-641224-4~~
	91.14	[3.588]	23	~~2-641224-3~~
	87.17	[3.432]	22	~~2-641224-2~~
	83.21	[3.276]	21	~~2-641224-1~~
OBSOLETE	79.25	[3.120]	20	~~2-641224-0~~
7 SUPERSEDED	75.29	[2.964]	19	~~1-641224-9~~
	71.32	[2.808]	18	~~1-641224-8~~
	67.36	[2.652]	17	~~1-641224-7~~
	63.40	[2.496]	16	~~1-641224-6~~
OBSOLETE	59.44	[2.340]	15	~~1-641224-5~~
SUPERSEDED 7	55.47	[2.184]	14	~~1-641224-4~~
	51.51	[2.028]	13	~~1-641224-3~~
	47.55	[1.872]	12	~~1-641224-2~~
	43.59	[1.716]	11	~~1-641224-1~~
	39.62	[1.560]	10	~~1-641224-0~~
	35.66	[1.404]	9	~~641224-9~~
OBSOLETE	31.70	[1.248]	8	~~641224-8~~
7 SUPERSEDED	27.74	[1.092]	7	~~641224-7~~
OBSOLETE	23.77	[.936]	6	~~641224-6~~
7 SUPERSEDED	19.81	[.780]	5	~~641224-5~~
	15.85	[.624]	4	~~641224-4~~
	11.89	[.468]	3	~~641224-3~~
	7.92	[.312]	2	~~641224-2~~

641224

THIS DRAWING IS A CONTROLLED DOCUMENT.

DIMENSIONS: mm [INCHES]

TOLERANCES UNLESS OTHERWISE SPECIFIED:
0 PLC ± -
1 PLC ± -
2 PLC ± -
3 PLC ± -
4 PLC ± -
ANGLES ± -

MATERIAL 1
FINISH 1

DWN B. LEWIS 12 FEB 91
CHK R. SWING 12 FEB 91
APVD D. CLARK 20 FEB 91
PRODUCT SPEC 108-1051
APPLICATION SPEC 114-1020
WEIGHT -

TE Connectivity

NAME MTA-156 CONNECTOR ASSEMBLY, 22 AWG, STANDARD -

SIZE	CAGE CODE	DRAWING NO	RESTRICTED TO
A2	00779	C-641224	-

CUSTOMER DRAWING | SCALE 4:1 | SHEET 1 OF 1 | REV W2