THIS DRAWING IS UNPUBLISHED. RELEASED FOR PUBLICATION -,- .
© COPYRIGHT 2011 BY TYCO ELECTRONICS CORPORATION. ALL RIGHTS RESERVED.

LOC	DIST
DW	—

REVISIONS

P	LTR	DESCRIPTION	DATE	DWN	APVD
	B	REVISED (ECR-13-000303, DRAWING REDRAW)	01APR'13	E.L.	W.K.

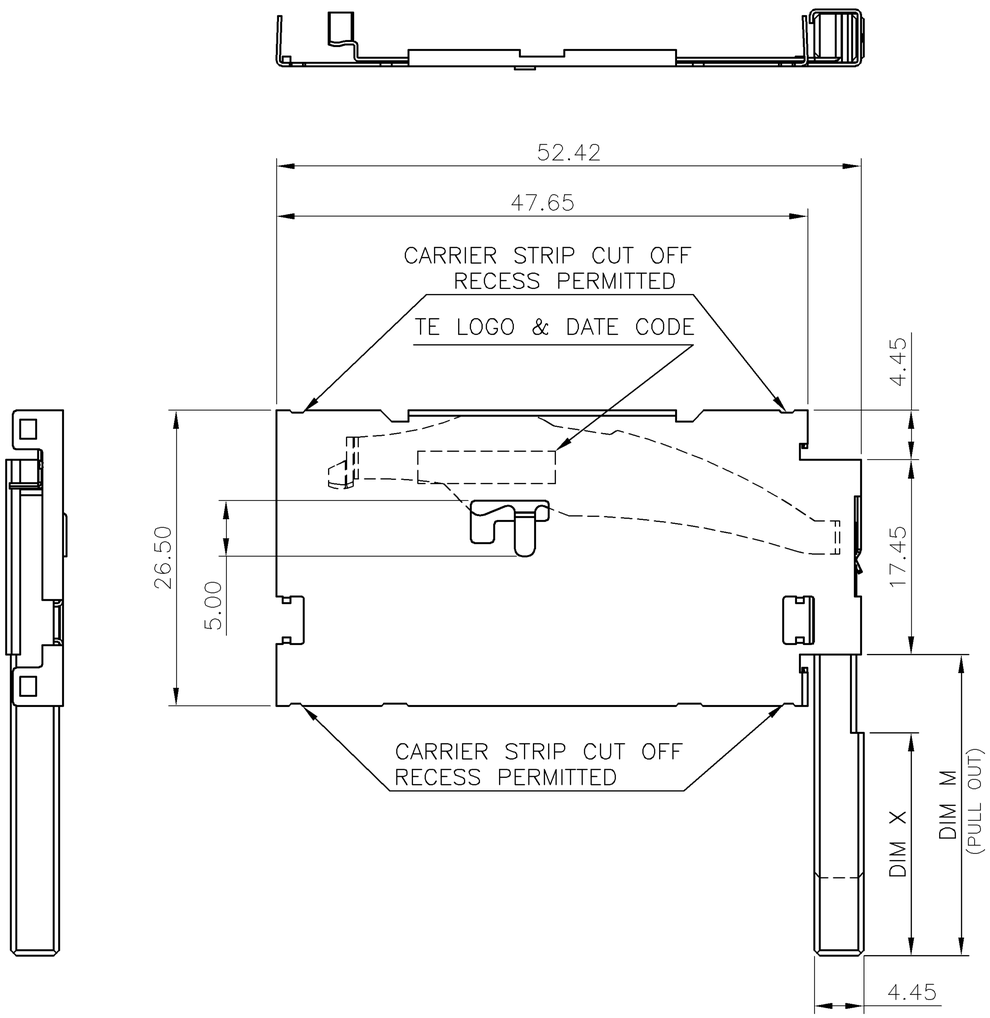

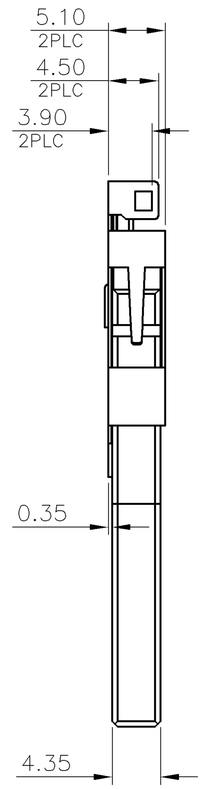

NOTE:
1. MATERIAL:
   1.1 EJECTOR: PBT 30% GF. UL 94V-0, COLOR: BLACK.
   1.2 TOP SHELL: STAINLESS STEEL.
   1.3 PUSH BAR: STAINLESS STEEL.
2. SPECIFICATION:
   EJECTOR LENGTH: DIM X (SEE TABLE)
3. APPLY TO TYPE II HEADER POR P/N 1734448 1734449 1734450 WHEN THESE PARTS HAVE ALREADY PASSED IR REFLOW PROCESS.

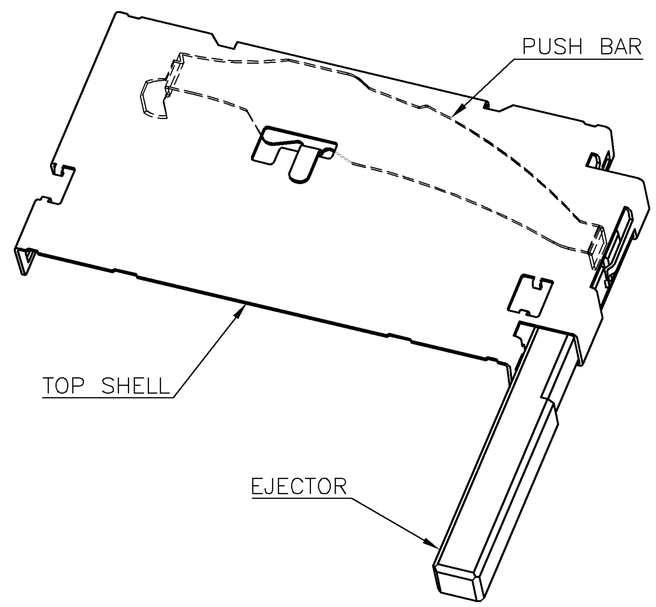

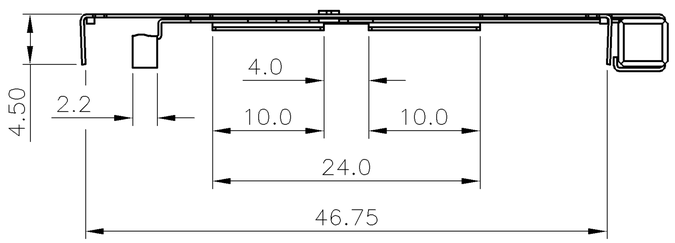

TYPE	PIVOT	DIM M	DIM X	PART NUMBER
OBSOLETE	II	W/O	29.05	22.05	~~1734452-3~~
			27	20	1734452-2

THIS DRAWING IS A CONTROLLED DOCUMENT.

DIMENSIONS: mm

TOLERANCES UNLESS OTHERWISE SPECIFIED:

0 PLC	± –
1 PLC	± 0.3
2 PLC	± 0.2
3 PLC	± 0.15
4 PLC	± –
ANGLES	± 3°

MATERIAL: SEE NOTE

FINISH: SEE NOTE

DWN O. HU 26JUN2007
CHK S. HOU 26JUN2007
APVD W.J. KE 26JUN2007
PRODUCT SPEC 108-57134
APPLICATION SPEC —
WEIGHT 5.01 GRAMS
CUSTOMER DRAWING

TE Connectivity

NAME: EJECTOR ASSEMBLY FOR COMPACT FLASH HEADER

SIZE	CAGE CODE	DRAWING NO	RESTRICTED TO
A3	00779	C-1734452	—

SCALE — SHEET 1 OF 2 REV B

THIS DRAWING IS UNPUBLISHED. RELEASED FOR PUBLICATION -,- .
© COPYRIGHT 2011 BY TYCO ELECTRONICS CORPORATION. ALL RIGHTS RESERVED.

LOC	DIST
DW	—

REVISIONS

P	LTR	DESCRIPTION	DATE	DWN	APVD
		SEE SHEET 1.			

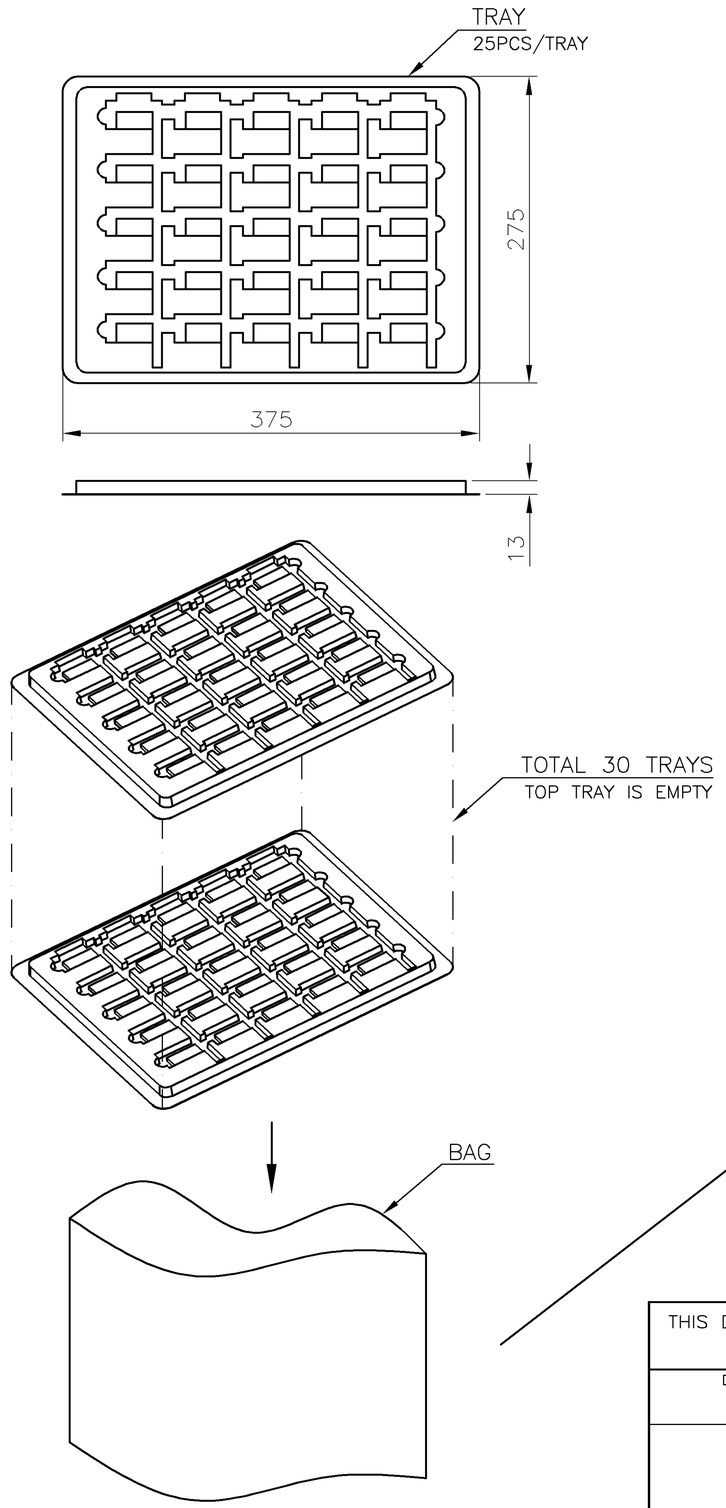

NOTES :
1. TRAY : PS.
   BAG : PE
   BOX : CORRUGATED FIBERBOARD
2. DIMENSION :
   TRAY : L=375mm, W=275mm, H=13mm
   BAG : L=700mm, W=600mm, THICKNESS=0.1mm
   BOX : L=394mm, W=292mm, H=216mm

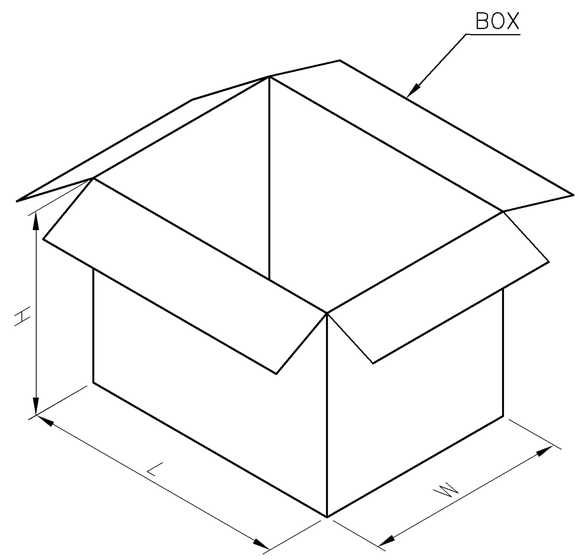

6.1 Kg	3.76 Kg	25	30	750
GROSS WEIGHT	NET WEIGHT	PCS/ TRAY	TRAY/ BOX	PCS/ BOX

THIS DRAWING IS A CONTROLLED DOCUMENT.

DIMENSIONS: mm

TOLERANCES UNLESS OTHERWISE SPECIFIED:

0 PLC	± –
1 PLC	± 0.3
2 PLC	± 0.2
3 PLC	± 0.15
4 PLC	± –
ANGLES	± 3°

MATERIAL –

FINISH –

DWN –
CHK –
APVD –
PRODUCT SPEC –
APPLICATION SPEC –
WEIGHT –

CUSTOMER DRAWING

TE Connectivity

NAME
EJECTOR ASSEMBLY
FOR COMPACT FLASH HEADER

SIZE	CAGE CODE	DRAWING NO	RESTRICTED TO
A3	00779	C-1734452	—

SCALE	SHEET	REV
—	2 OF 2	B