THIS DRAWING IS UNPUBLISHED. RELEASED FOR PUBLICATION 20
© COPYRIGHT 20 BY TYCO ELECTRONICS CORPORATION. ALL RIGHTS RESERVED.

PART NUMBER	REV	TERMINATOR	FEED TYPE	DESCRIPTION
1528718-1	B	LEADMAKER	MECH POST FEED	CUTS CARRIER
1528718-2	B	BENCH	MECH PRE FEED	CUTS CARRIER
1528718-6	B	LEADMAKER	MECH POST FEED	CONTINUOUS CARRIER
7-1528718-1	B	LEADMAKER	MECH POST FEED	-1 AND SPARE PARTS
7-1528718-2	B	BENCH	MECH PRE FEED	-2 AND SPARE PARTS
7-1528718-6	B	LEADMAKER	MECH POST FEED	-6 AND SPARE PARTS
7-1528718-7	A	-	-	SPARE PARTS KIT

CRIMP DATA MOLEX TERMINAL MOLEX CRIMP SPECS 5

TERMINAL NAME: FEMALE TERMINAL CP 1.5

CRIMP	SIZE	TYPE	RANGE
WIRE	2.21 [.087 IN]	F	>1.00-2.00mm²
INSUL	2.79 [.110 IN]	O	2.10-2.70 [.083-.106 IN]

WIRE STRIP LENGTH 4.50 [.177 IN]

APPL INSTRUCTIONS 408-8322 & 408-8490

TERMINAL APPL SPEC MOLEX DRG. - RSD-98915-001 SHT 3 6

FEED 9.20 [.362 IN]

TERMINALS APPLIED

TE TERM PN	MANUF TERM PN	-	-
1949147-1	0989151039	-	-
1949147-2	0989151219	-	-
1949147-3	64323-1039	-	-
1949147-4	64323-1219	-	-

WIRE SIZE	CRIMP HEIGHT * 5	REF SETTING *
2.00mm²	1.75 ±0.05 [.069 ±.002 IN]	B 5
1.50mm²	1.55 ±0.05 [.061 ±.002 IN]	D 1
1.40mm²	1.50 ±0.05 [.059 ±.002 IN]	D 3
-	-	-
-	-	-
-	-	-
-	-	-
-	-	-
-	-	-
-	-	-
-	-	-
-	-	-

1. RECOMMENDED SPARE PARTS.

2. GREASE RAM, CAM, CAM FOLLOWER AND FEED ROD LIGHTLY.

3. CERTAIN TERMINALS REQUIRE LUBRICATION. REFER TO THE APPLICATOR INSTRUCTION SHEET FOR MORE INFORMATION.

4. LUBRICATE DAILY PER THE APPLICATOR INSTRUCTION SHEET SUPPLIED WITH THE APPLICATOR.

5. ALL CRIMP DATA SUPPLIED BY THE TERMINAL MANUFACTURER.

6. ONLY REFERENCE FOR CRIMP HEIGHTS, DEFORMATION OF THE CRIMPING CONTACT, WIRE POSITION IN CRIMPING AREA & WIRE PREPARATION.

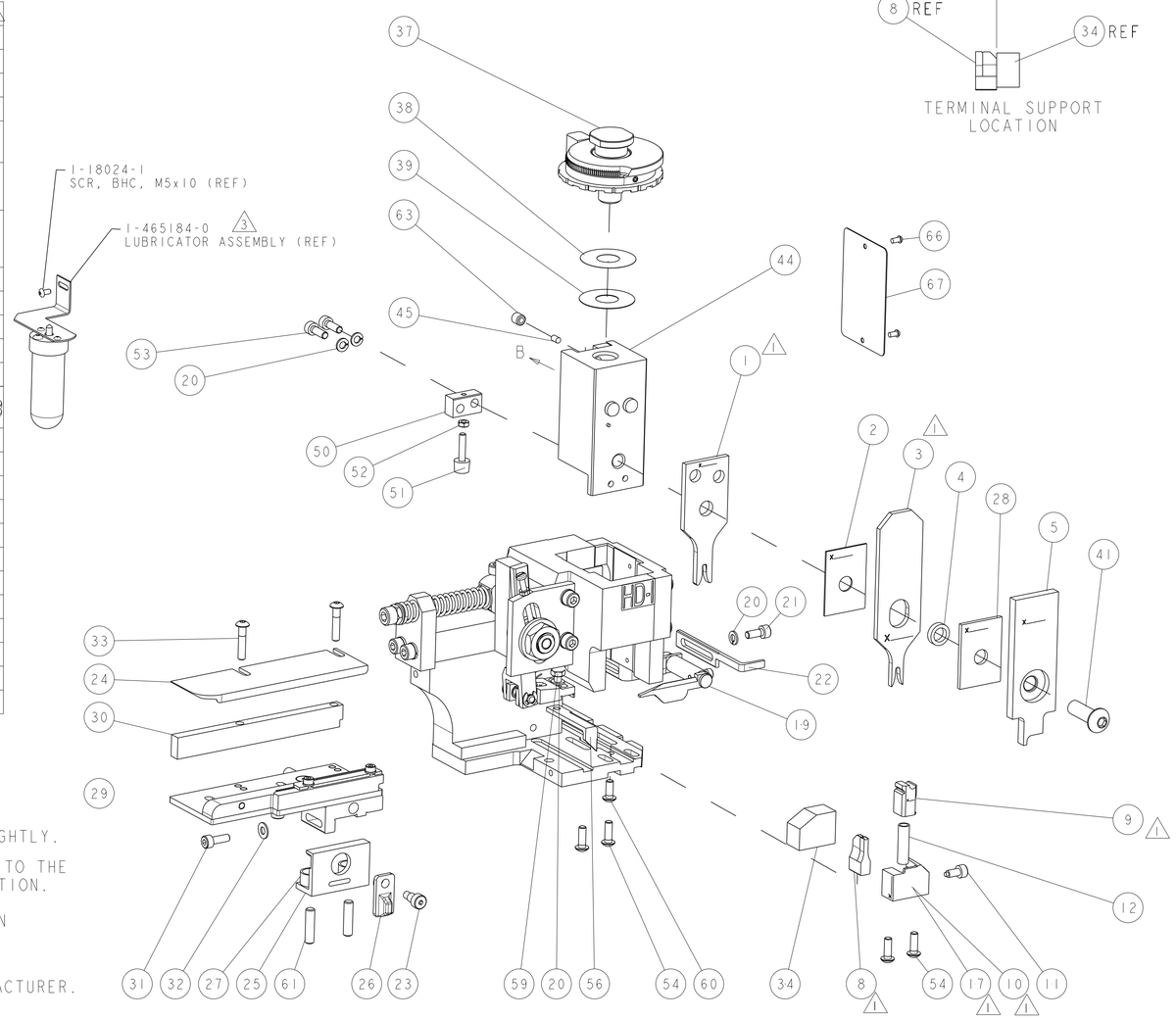

* WARNING
ON INSTALLATION, SET WIRE DISC TO LARGEST WIRE SIZE SETTING. USE OF SETTINGS BELOW MIN. REQUIRED CRIMP HEIGHT SETTING WILL CAUSE DAMAGE TO CRIMP TOOLING.

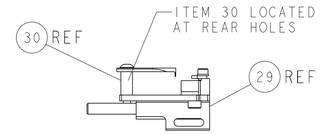

FEED TRACK POSITION GUIDE BY WIRE BARREL

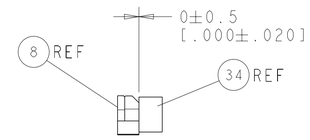

TERMINAL SUPPORT LOCATION

SET UP GAGE 458637-3

LOC	DIST
A	66

REVISIONS

P	LTR	DESCRIPTION	DATE	DWN	APVD
	A	SEE ECO-06-023362	030CT2006	LJL	MC
	B	ECR-10-009696	05MAY2010	MY	TE

ITEM NO	PART NO -77	-76	-72	-71	-6	-2	-1	DESCRIPTION
73	-	-	-	-	-	-	-	-
72	-	-	-	-	-	-	-	-
71	-	1	1	1	1	1	1	1338705-3 DOCUMENTATION PACKAGE
70	-	-	-	-	-	-	-	-
69	-	-	-	-	-	-	-	-
68	-	-	-	-	-	-	-	-
67	-	1	1	1	1	1	1	461264-5 PLATE, IDENTIFICATION
66	-	2	2	2	2	2	2	21017-2 SCREW, DRIVE
65	-	-	-	-	-	-	-	-
64	-	-	-	-	-	-	-	-
63	-	1	1	1	1	1	1	3-18031-0 SCR, SET, CUP POINT M6 X 6.0
62	-	-	-	-	-	-	-	-
61	-	2	2	2	2	2	2	2-18032-5 SCR, SET, FLT POINT M5 X 20.0
60	-	1	1	1	1	1	1	18024-7 SCR, BTN SKT HD CAP (M4 X 10.0)
59	-	1	1	1	1	1	1	5-18022-2 SCR, HEX HD CAP M4 X 8.0
58	-	-	-	-	-	-	-	-
57	-	-	-	-	-	-	-	-
56	-	1	1	1	1	1	1	1338685-1 PAWL, FEED
55	-	-	-	-	-	-	-	-
54	-	4	4	4	4	4	4	18024-8 SCR, BTN SKT HD CAP (M4 X 12.0)
53	-	2	2	2	2	2	2	1-18023-2 SCR, SKT HD CAP M4 X 12.0
52	-	1	1	1	1	1	1	18030-1 NUT, HEX, REG M3
51	-	1	1	1	1	1	1	811242-5 BUMPER, HOLD DOWN
50	-	1	1	1	1	1	1	690753-2 SPACER, TONKER
49	-	1	1	1	1	1	1	18024-3 SCR, BTN SKT HD CAP (M3 X 10.0)
48	-	-	1	-	-	1	-	1338675-1 CAM, UNIVERSAL PRE FEED
47	-	1	-	1	1	-	1	1338676-1 CAM, UNIVERSAL POST-FEED
46	-	1	1	1	1	1	1	1320999-3 APPLICATOR SUBASSEMBLY, HDI
45	-	1	1	1	1	1	1	690191-1 PLUG,NYLON
44	-	1	1	1	1	1	1	1338660-1 RAM
43	-	-	-	-	-	-	-	-
42	-	-	-	-	-	-	-	-
41	-	1	1	1	1	1	1	2-18024-6 SCR, BTN SKT HD CAP (M8 X 25.0)
40	-	-	-	-	-	-	-	-
39	-	1	1	1	1	1	1	690125-1 SHIM SUB-ASSY
38	-	1	1	1	1	1	1	469367-3 SHIM
37	-	1	1	1	1	1	1	879103-2 FINE ADJUST HEAD ASSEMBLY
36	-	-	-	-	-	-	-	-
35	-	-	-	-	-	-	-	-
34	-	1	1	1	1	1	1	1320934-6 SUPPORT, TERMINAL
33	-	2	2	2	2	2	2	1-18024-0 SCR, BTN SKT HD CAP (M4 X 20.0)
32	-	1	1	1	1	1	1	18027-2 WASHER, FLAT, REG M4
31	-	1	1	1	1	1	1	1-18023-2 SCR, SKT HD CAP M4 X 12.0
30	-	1	1	1	1	1	1	1320908-1 SPACER, STRIP GUIDE
29	-	1	1	1	1	1	1	1633073-1 STRIP GUIDE ASSEMBLY
28	-	1	1	1	1	1	1	2-455888-0 SPACER, CRIMPER
27	-	2	2	2	2	2	2	1-22284-0 SPRING, COMPRESSION
26	-	1	1	1	1	1	1	356835-1 LEVER, DRAG RELEASE
25	-	1	1	1	1	1	1	240792-1 DRAG, TERMINAL
24	-	1	1	1	1	1	1	1320928-1 PLATE, STRIP GUIDE
23	-	1	1	1	1	1	1	980371-4 SCR, SKT HD SHLDR 5.0 DIA X 6.0
22	-	1	-	1	1	-	1	690472-2 STRIPPER
21	-	1	1	1	1	1	1	1-18023-1 SCR, SKT HD CAP M4 X 10.0
20	-	4	4	4	4	4	4	18025-2 WASHER, SPRG LOCK, REG M4
19	-	-	1	-	-	1	-	1424364-1 STRIPPER/ WIRE STOP ASSY
18	-	-	-	-	-	-	-	-
17	-	1	-	-	1	-	-	1338684-1 SHEAR HOLDER, FRONT
16	-	-	-	-	-	-	-	-
15	-	-	-	-	-	-	-	-
14	-	-	-	-	-	-	-	-
13	-	-	-	-	-	-	-	-
12	-	1	1	1	1	1	1	3-22280-3 SPRING, COMPRESSION
11	-	1	1	1	1	1	1	356885-4 STOP, SHEAR
10	-	-	1	1	-	1	1	1320921-1 SHEAR HOLDER, FRONT, CUT
9	-	1	1	1	1	1	1	462006-1 FLOATING SHEAR, FRONT
8	1	2	2	2	1	1	1	2-1633138-0 ANVIL, COMBINATION
7	-	-	-	-	-	-	-	-
6	-	-	-	-	-	-	-	-
5	-	1	1	1	1	1	1	3-455889-6 DEPRESSOR, SHEAR
4	-	1	1	1	1	1	1	238011-2 BLOCK, CRIMPER SPACER
3	1	2	2	2	1	1	1	456135-7 CRIMPER, INSULATION O PREMIUM
2	-	1	1	1	1	1	1	455888-7 SPACER, CRIMPER
1	1	2	2	2	1	1	1	7-568176-4 CRIMPER, WIRE

VIEW B ROTATED 180°

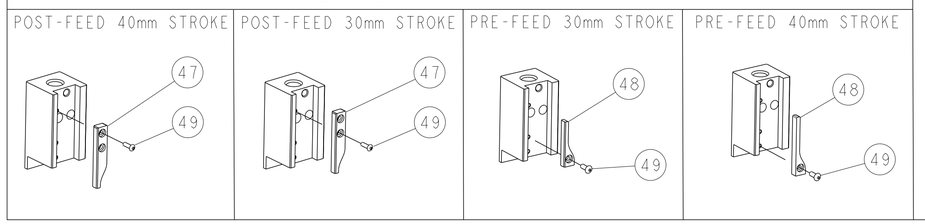

ITEM NO	PART NO -77	-76	-72	-71	-6	-2	-1	DESCRIPTION
84	-	-	-	-	-	-	-	-
83	-	-	-	-	-	-	-	-
82	-	-	-	-	-	-	-	-
81	-	-	-	-	-	-	-	-
80	-	-	-	-	-	-	-	-
79	-	-	-	-	-	-	-	-
78	-	-	-	-	-	-	-	-
77	-	-	-	-	-	-	-	-
76	-	-	-	-	-	-	-	-
75	-	-	-	-	-	-	-	-
74	-	-	-	-	-	-	-	-

THIS DRAWING IS A CONTROLLED DOCUMENT FOR TYCO ELECTRONICS CORPORATION IT IS SUBJECT TO CHANGE WITHOUT NOTICE. CONTACT THE ORGANIZATION SHOULD BE CONTACTED FOR THE LATEST REVISION.

DIMENSIONS: mm [IN]

TOLERANCES UNLESS OTHERWISE SPECIFIED:
0 PLC ±-
1 PLC ±-
2 PLC ±-
3 PLC ±-
4 PLC ±-
ANGLES ±-

MATERIAL - FINISH - -

DWN 05SEP2006 L LOFTHOUSE
CHK -
APVD 05SEP2006 M CLIFFORD
PRODUCT SPEC -
APPLICATION SPEC See Table
WEIGHT -

tyco Electronics
Tyco Electronics
Harrisburg, PA 17105-3608

NAME FINE ADJUST SIDE FEED HDI APPLICATOR -

SIZE	CAGE CODE	DRAWING NO	RESTRICTED TO
A1	00779	C-1528718	-

CUSTOMER ACCESSIBLE PRODUCTION DRAWING SCALE 3:5 SHEET 1 OF 1 REV B

AMP 4805 REV 31MAR2000

Pro/ENGINEER DRAWING

Mouser Electronics

Authorized Distributor

Click to View Pricing, Inventory, Delivery & Lifecycle Information:

TE Connectivity:

1528718-2