REVISIONS			
REV	DESCRIPTION	DATE	APPROVED
01_1	REVISED PER ECN 95-0183-1	4/28/95	M.Y.

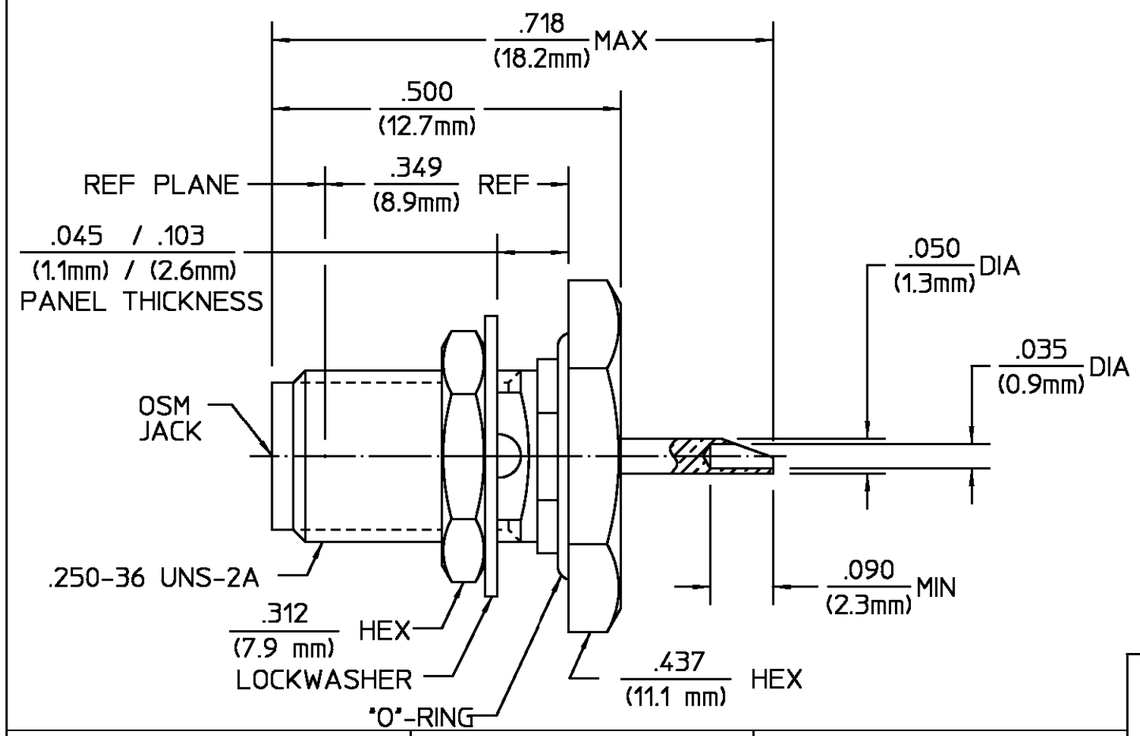

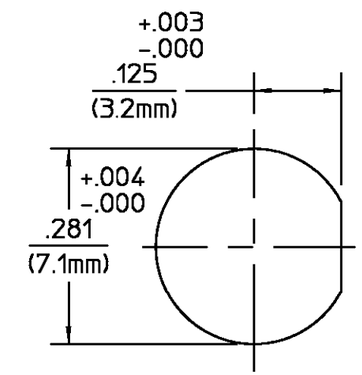

RECOMMENDED MOUNTING HOLE

ELECTRICAL	
Nominal Impedance (Ohms)	50
Frequency Range (GHz)	Not Rated
Volt Rating (VRMS MAX)	
@ Sea Level	335
VSWR	N/A
Insertion Loss (dB MAX)	N/A
RF Leakage (dB MIN)	N/A
Corona, 70,000 Ft (VRMS MIN)	250
Dielectric Withstanding Voltage	
(VRMS MIN) @ Sea Level	1,000
Contact Resistance (Milliohms MAX)	
Center Contact	3.0
Outer Contact	2.0
Cable to Housing	N/A
RF High Potential @ Sea Level	
(VRMS MIN @ 5 MHz)	670
I.R.(Megohms MIN)	5,000

MECHANICAL	
Interface Dimensions MIL-STD-348A,	
Fig.	310.2
Recommended Mating	
Torque	7-10 in-lbs
Mating Characteristics:	
Insertion (MAX Lbs)	3.0
Withdrawal (MIN Oz)	1.0
Force to Engage and	
Disengage (In-Lbs MAX)	2.0
Center Contact Captivation	
Axial (Lbs MIN)	6.0
Radial (In-Oz MIN)	4.0
Cable Retention	
Axial Force (Lbs)	N/A
Torque (In-Oz)	N/A
Weight (Grams)	TBD

ENVIRONMENTAL
Temperature Rating -65°C to +105°C
Vibration MIL-STD-1344, Method 2005, Condition IV.
Shock MIL-STD-1344, Method 2004, Condition G.
Thermal Shock MIL-STD-1344, Method 1003, Condition A, Except High Temp +85°C.
Humidity MIL-STD-1344, Method 1002, Type II
Corrosion - MIL-STD-1344, Method 1001, Condition B

COMPONENT	MATERIAL	FINISH
HOUSING MOUNTING NUT LOCKWASHER	STAINLESS STEEL PER ASTM-A484 AND ASTM-A582, TYPE 303	PASSIVATE PER ASTM-A380
DIELECTRIC	TFE FLUOROCARBON PER ASTM-D-1457	N/A
CENTER CONTACT	BERYLLIUM COPPER PER ASTM B 196, ALLOY C17300, CONDITION H	GOLD PLATE PER MIL-G-45204 OVER COPPER PLATE PER MIL-C-14550
"O" - RING	SILICONE RUBBER PER ZZ-R-765	N/A

UNLESS OTHERWISE SPECIFIED DIMENSIONS ARE IN INCHES
TOLERANCE ON
FRAC. ± 1/64 DEC. ±.005 ANGLES ± 1°

DRAWN BY M.Y. DATE 12/1/92
CHECKED BY
APP'D BY 12/3/92

AMP

AMP Incorporated
140 Fourth Avenue
Waltham, MA 02451-7599

These drawings and specifications are the property of M/A-COM Incorporated and shall not be reproduced or copied or used in whole or in part as the basis for the manufacture or sale of item(s) without written permission.

USE ASS'Y PROCEDURE

NO. A.P. N/A

TITLE
OSM BULKHEAD FEEDTHRU JACK RECEPTACLE SOLDER PORT TERMINAL

SIZE	CODE IDENT NO.		REV
B	26805	2056-8011-92	01_1
SCALE 5 : 1			SHEET 1 OF 1

CUSTOMER DRAWING

AMP PART # 1053118-1
SHEET 1 OF 1 REV A

Mouser Electronics

Authorized Distributor

Click to View Pricing, Inventory, Delivery & Lifecycle Information:

TE Connectivity:

2056-8011-92