THIS DRAWING IS UNPUBLISHED. RELEASED FOR PUBLICATION -,- .
© COPYRIGHT - By - ALL RIGHTS RESERVED.

1. AMP MOLDED ON THIS SURFACE.
2. PART NUMBER AND DATE CODE MARKED ON THIS SURFACE.
3. NYLON, GLASS FILLED, FLAME RETARDANT, BLACK.
4. 0.76um [.000030] MIN GOLD FOR A LENGTH OF 2.54 [.100] MIN FROM MATING END, 2.54um [.000100] MIN TIN-LEAD FOR A LENGTH OF 9.70 [.382] MIN FROM OPPOSITE END, BOTH OVER 1.27um [.000050] MIN NICKEL.
5. 0.76um [.000030] MIN GOLD FOR A LENGTH OF 2.54 [.100] MIN FROM MATING END, 2.54um [.000100] MIN TIN FOR A LENGTH OF 9.70 [.382] MIN FROM OPPOSITE END, BOTH OVER 1.27um [.000050] MIN NICKEL.
6. OBSOLETE PARTS: OBSOLETE CIS STREAMLINING PER D.RENAUD/D.SINISI

REVISIONS

P	LTR	DESCRIPTION	DATE	DWN	APVD
	H	REVISED PER ECO-06-3414	2/22/06	SS	SH
	H1	REVISED PER ECO-09-021510	11SEP09	KK	AEG
	J	REVISED PER ECO-17-004657	05APR2017	RS	MZ

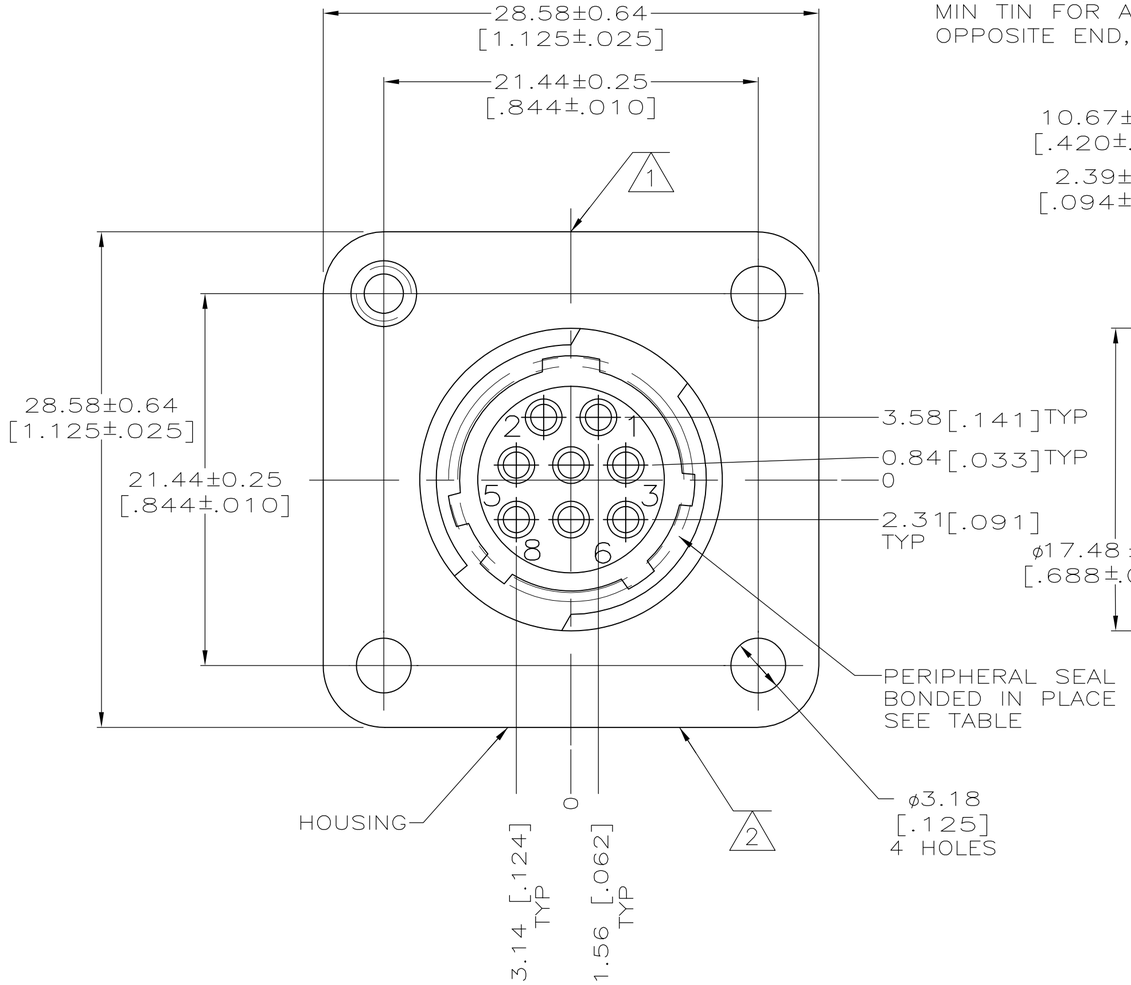

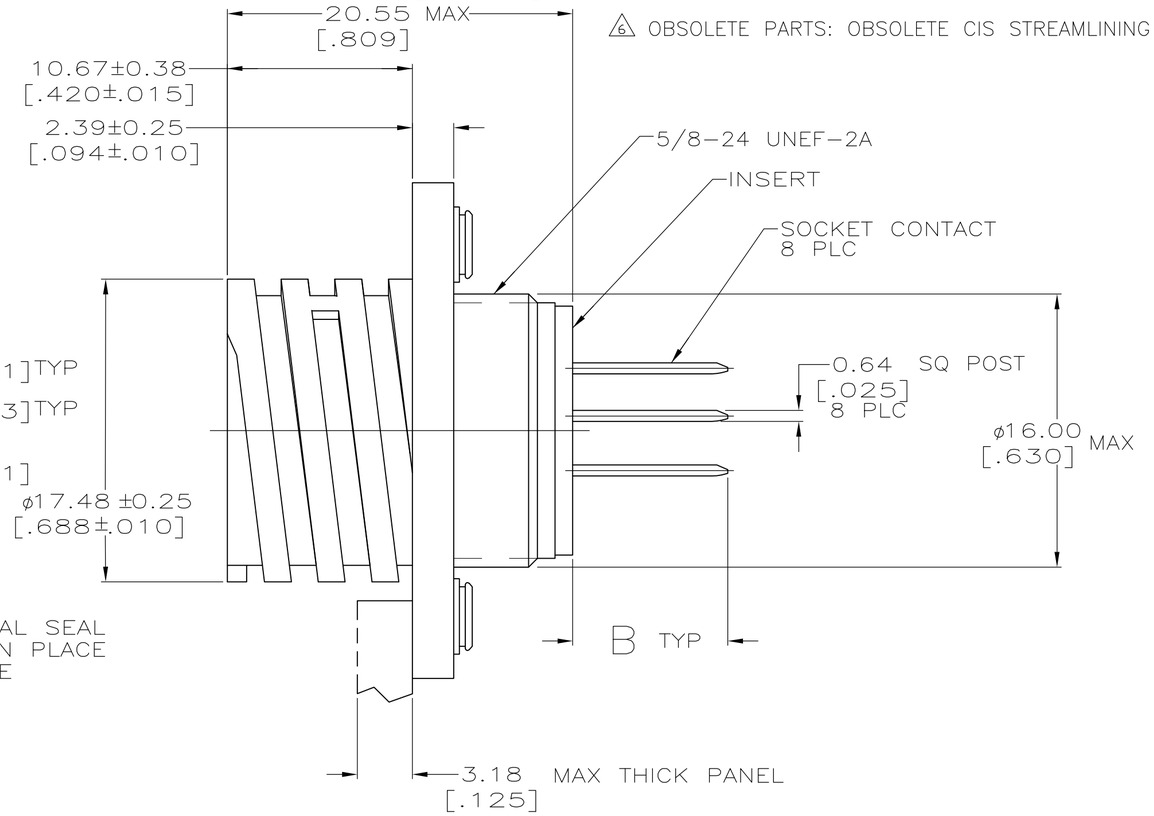

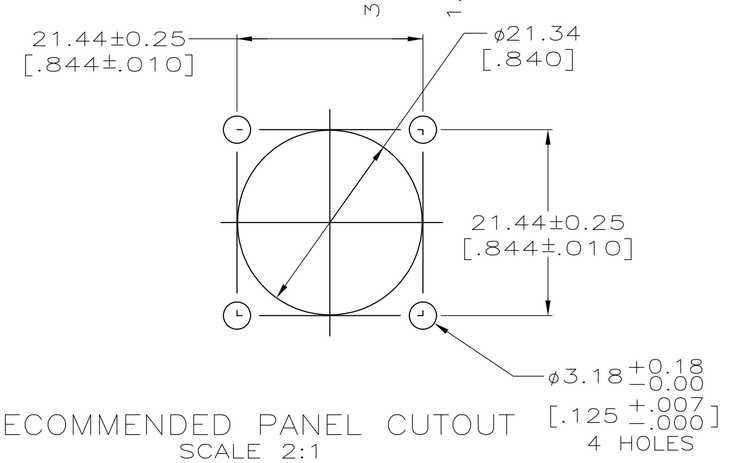

RECOMMENDED PANEL CUTOUT
SCALE 2:1

	CONTACT FINISH	PERIPHERAL SEAL	THREADED INSERT	DIM B	PART NUMBER
	5	NO	NO	8.94±0.76[.352±.030]	1-208657-1
	5	NO	YES	14.58±0.76[.574±.030]	1-208657-0
6 OBSOLETE	~~5~~	~~NO~~	~~NO~~	~~12.17±0.76[.479±.030]~~	~~208657-9~~
	4	NO	NO	12.17±0.76[.479±.030]	208657-8
OBSOLETE	~~4~~	~~YES~~	~~YES~~	~~14.58±0.76[.574±.030]~~	~~208657-7~~
OBSOLETE	~~4~~	~~NO~~	~~NO~~	~~8.94±0.76[.352±.030]~~	~~208657-6~~
	4	NO	YES	14.58±0.76[.574±.030]	208657-5
6 OBSOLETE	~~4~~	~~NO~~	~~YES~~	~~-~~	~~208657-4~~
OBSOLETE	~~4~~	~~NO~~	~~NO~~	~~-~~	~~208657-3~~
OBSOLETE	~~4~~	~~NO~~	~~NO~~	~~8.94±0.76[.352±.030]~~	~~208657-2~~
	4	NO	NO	8.94±0.76[.352±.030]	208657-1

THIS DRAWING IS A CONTROLLED DOCUMENT.

DIMENSIONS: mm

TOLERANCES UNLESS OTHERWISE SPECIFIED:
0 PLC ± -
1 PLC ± -
2 PLC ± 0.13 [.005]
3 PLC ± -
4 PLC ± -
ANGLES ± -

MATERIAL
4-40 THREADED INSERTS: BRASS
HOUSING AND INSERT: 3
SOCKET CONTACTS: PHOSPHOR BRONZE

FINISH -

DWN L. SIPE 05/16/90
CHK J. McCLINTON 5/30/90
APVD M. KAPEZYNSKI 5/30/90
PRODUCT SPEC 108-10024
APPLICATION SPEC -
WEIGHT -

TE Connectivity

NAME POSTED RECEPTACLE ASSEMBLY, ARRANGEMENT 11-8, TYPE 20 DF CONTACTS, CPC

SIZE	CAGE CODE	DRAWING NO	RESTRICTED TO
A2	00779	C-208657	-

CUSTOMER DRAWING | SCALE 4:1 | SHEET 1 OF 1 | REV J

208657

1471-9 (1/15)

Mouser Electronics

Authorized Distributor

Click to View Pricing, Inventory, Delivery & Lifecycle Information:

TE Connectivity:

208657-8