THIS DRAWING IS UNPUBLISHED. RELEASED FOR PUBLICATION 20
© COPYRIGHT 20 BY - ALL RIGHTS RESERVED.

| LOC | DIST |
|---|---|
| FX | 00 |

REVISIONS

| P | LTR | DESCRIPTION | DATE | DWN | APVD |
|---|---|---|---|---|---|
| | P | REVISED PER ECO-11-000262 | 06JAN2011 | DLD | WTW |
| | R | REVISED PER ECO-11-006070 | 28MAR2011 | DLD | WTW |
| | S | REVISED PER ECO-12-006350 | 03APR2012 | DLD | WTW |

## KEYING OPTIONS
SCALE 2:1

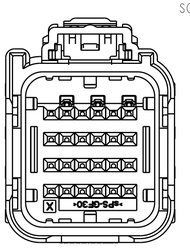
OPTION "A"

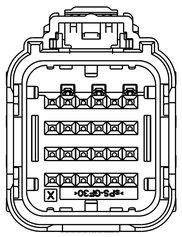
OPTION "B"

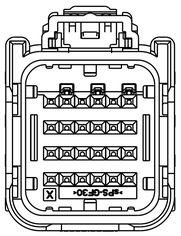
OPTION "C"

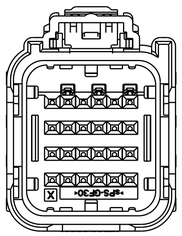
OPTION "D"

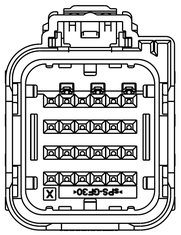
OPTION "E"

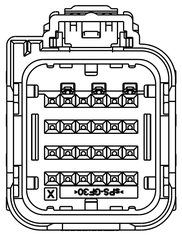
OPTION "F"

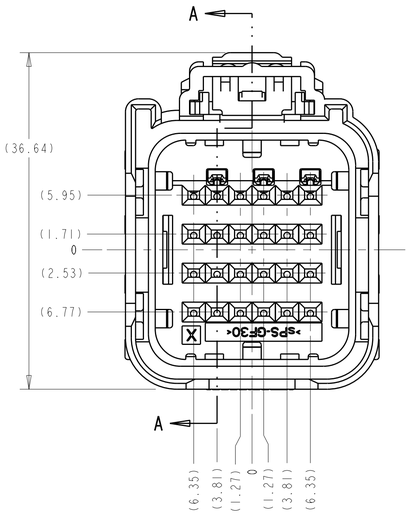


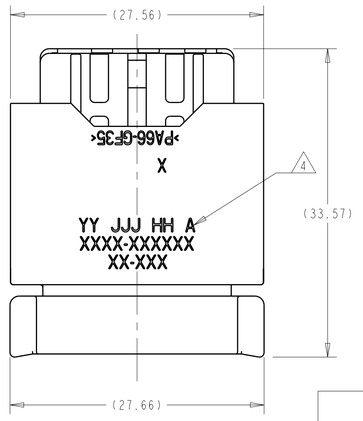


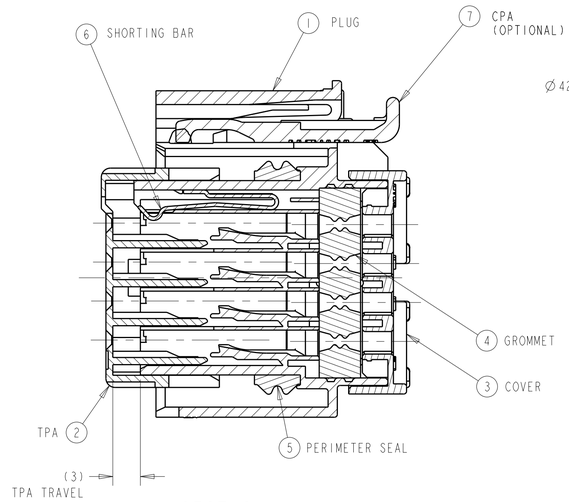


SECTION A-A
SHOWN WITH TPA IN
IT'S PRE-LOADED POSITION
(DELIVERY CONDTION)

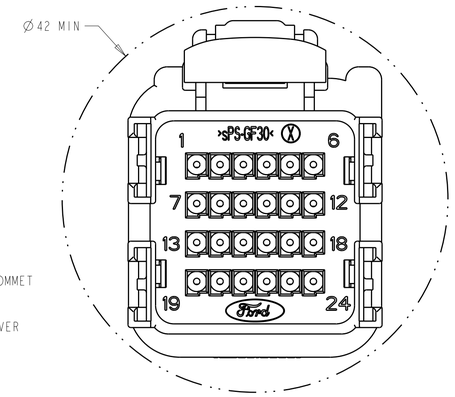


MINIMUM FEED THROUGH CONDITION
WITH 1mm CLEARANCE ALL AROUND

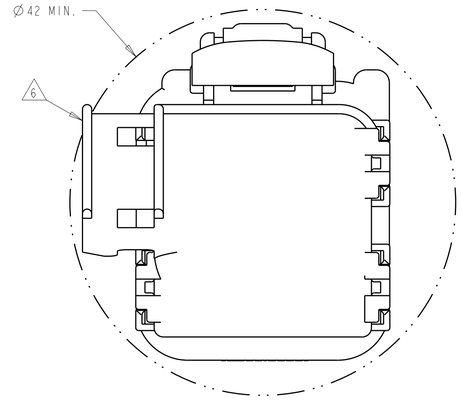


MINIMUM FEED THROUGH CONDITION
WITH 1mm CLEARANCE ALL AROUND
SHOWN WITH OPTION WIRESHIELD

1. APPLICABLE TERMINAL PART NUMBERS (SOLD SEPARATELY):
   FOR TIN APPLICATIONS: 1393367 AND 1393366.
   FOR GOLD APPLICATIONS: 1393365 AND 1393364.
   FOR TERMINATION AND REELING OPTIONS
   SEE DRAWINGS 1393367, 1393366, 1393365, AND 1393364.
2. COMPATIBLE WIRE SIZES FOR MAT SEAL DESIGN 1.19 TO 2.06 O.D.
   (22-18 AWG, 0.35-0.75 mm2)
3. TPA IS SHIPPED IN IT'S PRE-LOADED POSITION. ALL ASSEMBLIES ARE TO BE TRAY PACKAGED.
4. CUSTOMER PART NUMBER AND TRACEABILITY CODE (YY = TWO DIGIT YEAR, JJJ = JULIAN DAY, HH = TWO DIGIT MILITARY HOUR, A = ASSEMBLY PROCESS USED) ARE PRINTED IN THIS LOCATION.
5. PART ASSEMBLY WEIGHT WITHOUT TERMINALS AND WITH STANDARD PIN-OUT CONFIGURATION IS 14.39 GRAMS.
6. OPTIONAL WIRESHIELD P/N 7-1419157-8 (SOLD SEPARATELY). PLEASE CONTACT YOUR TYCO ELECTRONICS SALES REPRESENTATIVE FOR AVAILABILITY AND PRICING.

## ASSEMBLY PART NUMBERS

| 2-1924675-2 | 2-1924675-1 | 2-1924675-0 | 1-1924675-9 | 1-1924675-8 | 1-1924675-7 | 1-1924675-6 | 1-1924675-5 | 1-1924675-4 | 1-1924675-3 | 1-1924675-2 | 1-1924675-1 | 1-1924675-0 | 1924675-9 | 1924675-8 | 1924675-7 | 1924675-6 | 1924675-5 | 1924675-4 | 1924675-3 | 1924675-2 | 1924675-1 | 1-1924674-3 | 1-1924674-2 | 1-1924674-1 | 1-1924674-0 | 1924674-9 | 1924674-8 | 1924674-7 | 1924674-6 | 1924674-5 | 1924674-4 | 1924674-3 | 1924674-2 | 1924674-1 | ITEM | DESCRIPTION | MATERIAL | FINISH/COLOR |
|---|---|---|---|---|---|---|---|---|---|---|---|---|---|---|---|---|---|---|---|---|---|---|---|---|---|---|---|---|---|---|---|---|---|---|---|---|---|---|
| 1 | 1 | 1 | 1 | 1 | 1 | 1 | 1 | 1 | 1 | 1 | 1 | 1 | 1 | 1 | 1 | 1 | 1 | 1 | 1 | 1 | 1 | | | | | | | | | | | | | | 7 | CPA | PBT-GF15 | RED |
| 2 | 2 | 2 | 2 | 2 | 2 | 2 | 2 | 2 | 2 | 2 | 2 | 2 | 2 | 2 | 2 | 2 | 2 | 2 | 2 | 2 | 2 | 2 | 2 | 2 | 2 | 2 | 2 | 2 | 2 | 2 | 2 | 2 | 2 | 2 | 6 | SHORTING BAR | S.S. | SEE COMPONENT DRAWING |
| 1 | 1 | 1 | 1 | 1 | 1 | 1 | 1 | 1 | 1 | 1 | 1 | 1 | 1 | 1 | 1 | 1 | 1 | 1 | 1 | 1 | 1 | 1 | 1 | 1 | 1 | 1 | 1 | 1 | 1 | 1 | 1 | 1 | 1 | 1 | 5 | PERIMETER SEAL | SILICONE | GREEN |
| 1 | 1 | 1 | 1 | 1 | 1 | 1 | 1 | 1 | 1 | 1 | 1 | 1 | 1 | 1 | 1 | 1 | 1 | 1 | 1 | 1 | 1 | 1 | 1 | 1 | 1 | 1 | 1 | 1 | 1 | 1 | 1 | 1 | 1 | 1 | 4 | GROMMET | SILICONE | BROWN |
| 1 | 1 | 1 | 1 | 1 | 1 | 1 | 1 | 1 | 1 | 1 | 1 | 1 | 1 | 1 | 1 | 1 | 1 | 1 | 1 | 1 | 1 | 1 | 1 | 1 | 1 | 1 | 1 | 1 | 1 | 1 | 1 | 1 | 1 | 1 | 3 | COVER | PA66 35% GF | BLACK |
| 1 | 1 | 1 | 1 | 1 | 1 | 1 | 1 | 1 | 1 | 1 | 1 | 1 | 1 | 1 | 1 | 1 | 1 | 1 | 1 | 1 | 1 | 1 | 1 | 1 | 1 | 1 | 1 | 1 | 1 | 1 | 1 | 1 | 1 | 1 | 2 | TPA WITH 3 SHORTING BAR POSITIONS CONFIGURATION | sPS 30% GF | NATURAL |
| | | | | | | | | | | | | | | | | | | | | | | | | | | | | | | | | | | | 1 | PLUG WITH KEYING OPTION "F" AND 3 SHORTING BAR POSITIONS CONFIGURATION | PA66 30% GF | BLACK |
| | | | | | | | | | | | | | | | | | | | | | | | | | | | | | | | | | | | 1 | PLUG WITH KEYING OPTION "E" AND 3 SHORTING BAR POSITIONS CONFIGURATION | PA66 35% GF | BLACK |
| | | | | | | | | | | | | | | | | | | | | | | | | | | | | | | | | | | | 1 | PLUG WITH KEYING OPTION "C" AND 3 SHORTING BAR POSITIONS CONFIGURATION | PA66 35% GF | BLACK |
| | | | | | | | | | | | | | | | | | | | | | | | | | | | | | | | | | | | 1 | PLUG WITH KEYING OPTION "A" AND 3 SHORTING BAR POSITIONS CONFIGURATION | PA66 35% GF | BLACK |
| | | | | | | | | | | | | | | | | | | | | | | | | | | | | | | | | | | | 1 | PLUG WITH KEYING OPTION "D" AND 3 SHORTING BAR POSITIONS CONFIGURATION | PA66 35% GF | BLACK |
| | | | | | | | | | | | | | | | | | | | | | | | | | | | | | | | | | | | 1 | PLUG WITH KEYING OPTION "C" AND 3 SHORTING BAR POSITIONS CONFIGURATION | PA66 35% GF | NATURAL |
| | | | | | | | | | | | | | | | | | | | | | | | | | | | | | | | | | | | 1 | PLUG WITH KEYING OPTION "B" AND 3 SHORTING BAR POSITIONS CONFIGURATION | PA66 35% GF | BLACK |
| 1 | 1 | 1 | 1 | 1 | 1 | 1 | 1 | 1 | 1 | 1 | 1 | 1 | 1 | 1 | 1 | 1 | 1 | 1 | 1 | 1 | 1 | 1 | 1 | 1 | 1 | 1 | 1 | 1 | 1 | 1 | 1 | 1 | 1 | 1 | 1 | PLUG WITH KEYING OPTION "A" AND 3 SHORTING BAR POSITIONS CONFIGURATION | PA66 35% GF | GRAY |
| QUANTITY | | | | | | | | | | | | | | | | | | | | | | | | | | | | | | | | | | | ITEM | DESCRIPTION | MATERIAL | FINISH/COLOR |

## KEYING OPTION "A" SHOWN

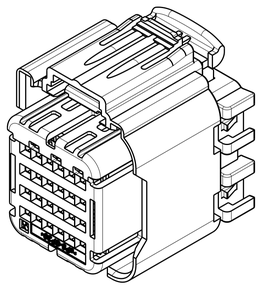
SCALE 2:1

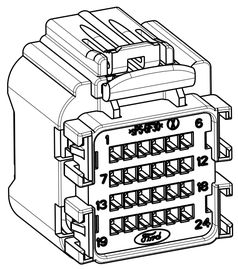

SCALE 2:1

THIS DRAWING IS A CONTROLLED DOCUMENT.

DIMENSIONS: mm

TOLERANCES UNLESS OTHERWISE SPECIFIED:
0 PLC ±-
1 PLC ±0.3
2 PLC ±0.10
3 PLC ±-
4 PLC ±-
ANGLES ±1°

MATERIAL - SEE CHART ABOVE
FINISH - -

DWN R. VESTAL 24JUL2007
CHK W. WELLINSKY 24JUL2007
APVD W. WELLINSKY 24JUL2007
PRODUCT SPEC - -
APPLICATION SPEC - -
WEIGHT SEE-NOTE 5

TE Connectivity

NAME 24 WAY ARM PLUG ASSEMBLY WITH SELECT LOAD SHORTING BARS CUSTOMER SPEC.

| SIZE | CAGE CODE | DRAWING NO | RESTRICTED TO |
|---|---|---|---|
| A1 | 00779 | C-1924674 | - |

CUSTOMER DRAWING

| SCALE | SHEET | OF | REV |
|---|---|---|---|
| 3:1 | 1 | 5 | S |

THIS DRAWING IS UNPUBLISHED. RELEASED FOR PUBLICATION 20
© COPYRIGHT 20 BY - ALL RIGHTS RESERVED.

| LOC | DIST |
|---|---|
| FX | 00 |

REVISIONS

| P | LTR | DESCRIPTION | DATE | DWN | APVD |
|---|---|---|---|---|---|
| | - | SEE SHEET 1 | - | - | - |

ASSEMBLY PART NUMBERS

| QUANTITY 2098376-1 | 1924686-1 | 1924685-1 | 1924684-1 | 1924683-1 | 1924682-1 | ITEM | DESCRIPTION | MATERIAL | FINISH/COLOR |
|---|---|---|---|---|---|---|---|---|---|
| | | | | | | 7 | CPA | PBT-GF15 | RED |
| 1 | 1 | 1 | 1 | 1 | 1 | 6 | SHORTING BAR | S.S. | SEE COMPONENT DRAWING |
| 1 | 1 | 1 | 1 | 1 | 1 | 5 | PERIMETER SEAL | SILICONE | GREEN |
| 1 | 1 | 1 | 1 | 1 | 1 | 4 | GROMMET | SILICONE | BROWN |
| 1 | 1 | 1 | 1 | 1 | 1 | 3 | COVER | PA66 35% GF | BLACK |
| 1 | 1 | 1 | 1 | 1 | 1 | 2 | TPA WITH 3 SHORTING BAR POSITIONS CONFIGURATION | sPS 30% GF | NATURAL |
| 1 | | | | | | 1 | PLUG WITH KEYING OPTION "F" AND 3 SHORTING BAR POSITIONS CONFIGURATION | PA66 30% GF | BLACK |
| | 1 | | | | | 1 | PLUG WITH KEYING OPTION "E" AND 3 SHORTING BAR POSITIONS CONFIGURATION | PA66 35% GF | BLACK |
| | | | 1 | | | 1 | PLUG WITH KEYING OPTION "C" AND 3 SHORTING BAR POSITIONS CONFIGURATION | PA66 35% GF | BLACK |
| | | | | | 1 | 1 | PLUG WITH KEYING OPTION "A" AND 3 SHORTING BAR POSITIONS CONFIGURATION | PA66 35% GF | BLACK |
| | | 1 | | | | 1 | PLUG WITH KEYING OPTION "D" AND 3 SHORTING BAR POSITIONS CONFIGURATION | PA66 35% GF | BLACK |
| | | | | | | 1 | PLUG WITH KEYING OPTION "C" AND 3 SHORTING BAR POSITIONS CONFIGURATION | PA66 35% GF | NATURAL |
| | | | | 1 | | 1 | PLUG WITH KEYING OPTION "B" AND 3 SHORTING BAR POSITIONS CONFIGURATION | PA66 35% GF | BLACK |
| | | | | | | 1 | PLUG WITH KEYING OPTION "A" AND 3 SHORTING BAR POSITIONS CONFIGURATION | PA66 35% GF | GRAY |

THIS DRAWING IS A CONTROLLED DOCUMENT.

DIMENSIONS: mm

TOLERANCES UNLESS OTHERWISE SPECIFIED:
0 PLC ±-
1 PLC ±0.3
2 PLC ±0.10
3 PLC ±-
4 PLC ±-
ANGLES ±1°

MATERIAL - SEE CHART ABOVE
FINISH - -

DWN R. VESTAL 24JUL2007
CHK W. WELLINSKY 24JUL2007
APVD W. WELLINSKY 24JUL2007
PRODUCT SPEC -
APPLICATION SPEC -
WEIGHT -

TE Connectivity

NAME 24 WAY ARM PLUG ASSEMBLY WITH SELECT LOAD SHORTING BARS CUSTOMER SPEC.

SIZE A1 | CAGE CODE 00779 | DRAWING NO C-1924674 | RESTRICTED TO -

CUSTOMER DRAWING | SCALE 3:1 | SHEET 2 OF 5 | REV S

4805 (3/11)

THIS DRAWING IS UNPUBLISHED. RELEASED FOR PUBLICATION 20
© COPYRIGHT 20 BY - ALL RIGHTS RESERVED.

| LOC | DIST |
|---|---|
| FX | 00 |

REVISIONS

| P | LTR | DESCRIPTION | DATE | DWN | APVD |
|---|---|---|---|---|---|
| | - | SEE SHEET 1 | - | - | - |

# PIN-OUT CHART

| | | | | | | | | | | | | | | | | | | | | | | | | | | | | | |
|---|---|---|---|---|---|---|---|---|---|---|---|---|---|---|---|---|---|---|---|---|---|---|---|---|---|---|---|---|---|
| | 3 / 4 | 1 / 2 | 1 | 2 | | | 5 | 6 | 7 | 8 | 9 | 10 | 11 | 12 | | 14 | 15 | 16 | 17 | 18 | | | 21 | | 23 | 24 | N | 1-1924674-3 | KEY "A" |
| | 3 / 4 | 1 / 2 | | | | | 5 | 6 | 7 | 8 | 9 | 10 | 11 | 12 | | 14 | 15 | 16 | 17 | 18 | | | 21 | | 23 | 24 | N | 1-1924674-2 | KEY "A" |
| | 3 / 4 | 1 / 2 | | | | | 5 | 6 | | | | | 11 | 12 | | 14 | 15 | 16 | 17 | 18 | 19 | 20 | 21 | | 23 | 24 | N | 1-1924674-1 | KEY "A" |
| | 3 / 4 | 1 / 2 | | | | | 5 | 6 | | | | | 11 | 12 | | 14 | 15 | 16 | 17 | 18 | | 20 | 21 | | 23 | 24 | N | 1-1924674-0 | KEY "A" |
| | 3 / 4 | 1 / 2 | | | | | 5 | 6 | 7 | 8 | 9 | 10 | 11 | 12 | | 14 | 15 | 16 | 17 | 18 | | | 21 | | 23 | 24 | N | 1924674-9 | KEY "A" |
| | 3 / 4 | 1 / 2 | | | | | 5 | 6 | | | | | 11 | 12 | | | 15 | 16 | 17 | 18 | 19 | 20 | 21 | | 23 | 24 | N | 1924674-8 | KEY "A" |
| | 3 / 4 | 1 / 2 | | | | | 5 | 6 | | | | | | | | 14 | 15 | 16 | 17 | 18 | 19 | 20 | 21 | | 23 | 24 | N | 1924674-7 | KEY "A" |
| | 3 / 4 | 1 / 2 | | | | | 5 | 6 | | | | | | | | 14 | 15 | 16 | 17 | 18 | | 20 | 21 | | 23 | 24 | N | 1924674-6 | KEY "A" |
| | 3 / 4 | 1 / 2 | | | | | 5 | 6 | | | | | | | | | 15 | 16 | 17 | 18 | | 20 | 21 | | 23 | 24 | N | 1924674-5 | KEY "A" |
| | 3 / 4 | 1 / 2 | | | | | 5 | 6 | | | | | 11 | 12 | | | 15 | 16 | 17 | 18 | | 20 | 21 | | 23 | 24 | N | 1924674-4 | KEY "A" |
| | 3 / 4 | 1 / 2 | | | | | 5 | 6 | | | | | 11 | 12 | | | 15 | 16 | 17 | 18 | | | 21 | 22 | 23 | | N | 1924674-3 | KEY "A" |
| | 3 / 4 | 1 / 2 | | | | | 5 | 6 | | | | | 11 | 12 | | | 15 | 16 | | 18 | | | 21 | 22 | 23 | | N | 1924674-2 | KEY "A" |
| | 3 / 4 | 1 / 2 | | | | | | | | | | | | | | | | | | | | | | | | | N | 1924674-1 | KEY "A" |
| 5 / 6 | 3 / 4 | 1 / 2 | 1 | 2 | 3 | 4 | 5 | 6 | 7 | 8 | 9 | 10 | 11 | 12 | 13 | 14 | 15 | 16 | 17 | 18 | 19 | 20 | 21 | 22 | 23 | 24 | CPA | ASSEMBLY PART NUMBER | PLUG KEYING OPTION |
| SHORTING BAR POSITION | | | TERMINAL HOLE POSITION | | | | | | | | | | | | | | | | | | | | | | | | | | |

| | |
|---|---|
| CAVITIES W/ A NUMERIC SYMBOL INDICATE SHORTING BAR LOADED | CAVITIES WITH A NUMERIC SYMBOL INDICATE CLOSED TERMINAL HOLE POSITIONS |
| BLANK CAVITIES INDICATE NO SHORTING BAR LOADED | BLANK CAVITIES INDICATE OPEN TERMINAL HOLE POSITIONS |

THIS DRAWING IS A CONTROLLED DOCUMENT.

DIMENSIONS: mm

TOLERANCES UNLESS OTHERWISE SPECIFIED:
0 PLC ±-
1 PLC ±0.3
2 PLC ±0.10
3 PLC ±-
4 PLC ±-
ANGLES ±3°

MATERIAL: SEE CHART ABOVE
FINISH: - -

DWN R. VESTAL 24JUL2007
CHK W. WELLINSKY 24JUL2007
APVD W. WELLINSKY 24JUL2007
PRODUCT SPEC -
APPLICATION SPEC -
WEIGHT -

TE Connectivity

NAME: 24 WAY ARM PLUG ASSEMBLY WITH SELECT LOAD SHORTING BARS CUSTOMER SPEC.

| SIZE | CAGE CODE | DRAWING NO | RESTRICTED TO |
|---|---|---|---|
| A1 | 00779 | C-1924674 | - |

CUSTOMER DRAWING | SCALE 3:1 | SHEET 3 OF 5 | REV S

THIS DRAWING IS UNPUBLISHED. RELEASED FOR PUBLICATION 20
© COPYRIGHT 20 BY - ALL RIGHTS RESERVED.

| LOC | DIST |
|---|---|
| FX | 00 |

REVISIONS

| P | LTR | DESCRIPTION | DATE | DWN | APVD |
|---|---|---|---|---|---|
| | - | SEE SHEET 1 | - | - | - |

# PIN-OUT CHART

| | | | | | | | | | | | | | | | | | | | | | | | | | | | | | | |
|---|---|---|---|---|---|---|---|---|---|---|---|---|---|---|---|---|---|---|---|---|---|---|---|---|---|---|---|---|---|---|
| | 3 / 4 | 1 / 2 | | | | | 5 | 6 | | | | | 11 | 12 | | 14 | | 16 | 17 | 18 | | | | | 23 | 24 | Y | 2-1924675-2 | KEY "A" |
| | 3 / 4 | 1 / 2 | | | | | 5 | 6 | | | | | | | | 14 | 15 | 16 | 17 | 18 | | 20 | 21 | 22 | 23 | 24 | Y | 2-1924675-1 | KEY "A" |
| | 3 / 4 | 1 / 2 | 1 | 2 | 3 | 4 | 5 | 6 | 7 | 8 | 9 | 10 | 11 | 12 | | | 15 | 16 | 17 | 18 | 19 | 20 | 21 | 22 | 23 | 24 | Y | 2-1924675-0 | KEY "A" |
| | 3 / 4 | 1 / 2 | | | | | 5 | 6 | | | | | | | | 14 | 15 | 16 | | | | | | 22 | | | Y | 1-1924675-9 | KEY "A" |
| | 3 / 4 | 1 / 2 | | | | | 5 | 6 | | | | | | | | 14 | 15 | 16 | | | | 20 | 21 | 22 | | | Y | 1-1924675-8 | KEY "A" |
| | 3 / 4 | 1 / 2 | | | | | 5 | 6 | | | | | 11 | 12 | | 14 | 15 | 16 | | | | 20 | 21 | 22 | | | Y | 1-1924675-7 | KEY "A" |
| | 3 / 4 | 1 / 2 | | | | | 5 | 6 | | | | | 11 | 12 | | 14 | 15 | 16 | | | | | | 22 | | | Y | 1-1924675-6 | KEY "A" |
| | 3 / 4 | 1 / 2 | | | | | 5 | 6 | | | | | 11 | 12 | | 14 | 15 | 16 | 17 | 18 | | | | 22 | 23 | 24 | Y | 1-1924675-5 | KEY "A" |
| | 3 / 4 | 1 / 2 | | | | | 5 | 6 | | | | | 11 | 12 | | 14 | 15 | 16 | 17 | 18 | | 20 | 21 | 22 | 23 | 24 | Y | 1-1924675-4 | KEY "A" |
| | 3 / 4 | 1 / 2 | | | | | 5 | 6 | | | | | 11 | 12 | | | 15 | 16 | 17 | 18 | | 20 | 21 | 22 | 23 | 24 | Y | 1-1924675-3 | KEY "A" |
| | 3 / 4 | 1 / 2 | | | | | | | 7 | 8 | 9 | 10 | 11 | 12 | | | | | 17 | 18 | | | 21 | | 23 | | Y | 1-1924675-2 | KEY "A" |
| | 3 / 4 | 1 / 2 | | | | | 5 | 6 | | | | | 11 | 12 | | 14 | 15 | 16 | 17 | 18 | 19 | 20 | 21 | | 23 | 24 | Y | 1-1924675-1 | KEY "A" |
| | 3 / 4 | 1 / 2 | | | | | 5 | 6 | | | | | 11 | 12 | | 14 | 15 | 16 | 17 | 18 | | 20 | 21 | | 23 | 24 | Y | 1-1924675-0 | KEY "A" |
| | 3 / 4 | 1 / 2 | | | | | 5 | 6 | 7 | 8 | 9 | 10 | 11 | 12 | | 14 | 15 | 16 | 17 | 18 | | | 21 | | 23 | 24 | Y | 1924675-9 | KEY "A" |
| | 3 / 4 | 1 / 2 | | | | | 5 | 6 | | | | | 11 | 12 | | | 15 | 16 | 17 | 18 | 19 | 20 | 21 | | 23 | 24 | Y | 1924675-8 | KEY "A" |
| | 3 / 4 | 1 / 2 | | | | | 5 | 6 | | | | | | | | 14 | 15 | 16 | 17 | 18 | 19 | 20 | 21 | | 23 | 24 | Y | 1924675-7 | KEY "A" |
| | 3 / 4 | 1 / 2 | | | | | 5 | 6 | | | | | | | | 14 | 15 | 16 | 17 | 18 | | 20 | 21 | | 23 | 24 | Y | 1924675-6 | KEY "A" |
| | 3 / 4 | 1 / 2 | | | | | 5 | 6 | | | | | | | | | 15 | 16 | 17 | 18 | | 20 | 21 | | 23 | 24 | Y | 1924675-5 | KEY "A" |
| | 3 / 4 | 1 / 2 | | | | | 5 | 6 | | | | | 11 | 12 | | | 15 | 16 | 17 | 18 | | 20 | 21 | | 23 | 24 | Y | 1924675-4 | KEY "A" |
| | 3 / 4 | 1 / 2 | | | | | 5 | 6 | | | | | 11 | 12 | | | 15 | 16 | 17 | 18 | | | 21 | 22 | 23 | | Y | 1924675-3 | KEY "A" |
| | 3 / 4 | 1 / 2 | | | | | 5 | 6 | | | | | 11 | 12 | | | 15 | 16 | | 18 | | | 21 | 22 | 23 | | Y | 1924675-2 | KEY "A" |
| | 3 / 4 | 1 / 2 | | | | | | | | | | | | | | | | | | | | | | | | | Y | 1924675-1 | KEY "A" |
| 5 / 6 | 3 / 4 | 1 / 2 | 1 | 2 | 3 | 4 | 5 | 6 | 7 | 8 | 9 | 10 | 11 | 12 | 13 | 14 | 15 | 16 | 17 | 18 | 19 | 20 | 21 | 22 | 23 | 24 | CPA | ASSEMBLY PART NUMBER | PLUG KEYING OPTION |
| SHORTING BAR POSITION | | | TERMINAL HOLE POSITION | | | | | | | | | | | | | | | | | | | | | | | | | | |
| CAVITIES W/ A NUMERIC SYMBOL INDICATE SHORTING BAR LOADED | | | CAVITIES WITH A NUMERIC SYMBOL INDICATE CLOSED TERMINAL HOLE POSITIONS | | | | | | | | | | | | | | | | | | | | | | | | | | |
| BLANK CAVITIES INDICATE NO SHORTING BAR LOADED | | | BLANK CAVITIES INDICATE OPEN TERMINAL HOLE POSITIONS | | | | | | | | | | | | | | | | | | | | | | | | | | |

THIS DRAWING IS A CONTROLLED DOCUMENT.

DIMENSIONS: mm

TOLERANCES UNLESS OTHERWISE SPECIFIED:
0 PLC ±-
1 PLC ±0.3
2 PLC ±0.10
3 PLC ±-
4 PLC ±-
ANGLES ±3°

MATERIAL: SEE CHART ABOVE

FINISH: - -

| | | |
|---|---|---|
| DWN | R. VESTAL | 24JUL2007 |
| CHK | W. WELLINSKY | 24JUL2007 |
| APVD | W. WELLINSKY | 24JUL2007 |

PRODUCT SPEC: -

APPLICATION SPEC: -

WEIGHT: -

TE Connectivity

NAME: 24 WAY ARM PLUG ASSEMBLY WITH SELECT LOAD SHORTING BARS CUSTOMER SPEC.

| SIZE | CAGE CODE | DRAWING NO | RESTRICTED TO |
|---|---|---|---|
| A1 | 00779 | C-1924674 | - |

CUSTOMER DRAWING | SCALE 3:1 | SHEET 4 OF 5 | REV S

4805 (3/11)

THIS DRAWING IS UNPUBLISHED. RELEASED FOR PUBLICATION 20
© COPYRIGHT 20 BY - ALL RIGHTS RESERVED.

| LOC | DIST |
|---|---|
| FX | 00 |

REVISIONS

| P | LTR | DESCRIPTION | DATE | DWN | APVD |
|---|---|---|---|---|---|
| | - | SEE SHEET 1 | - | - | - |

## PIN-OUT CHART

| 5 / 6 | 3 / 4 | 1 / 2 | 1 | 2 | 3 | 4 | 5 | 6 | 7 | 8 | 9 | 10 | 11 | 12 | 13 | 14 | 15 | 16 | 17 | 18 | 19 | 20 | 21 | 22 | 23 | 24 | CPA | ASSEMBLY PART NUMBER | PLUG KEYING OPTION |
|---|---|---|---|---|---|---|---|---|---|---|---|---|---|---|---|---|---|---|---|---|---|---|---|---|---|---|---|---|---|
| | | 1 / 2 | | | | | | | | | | | | | | | | | | | | | | | | | N | 2098376-1 | KEY "F" |
| | | 1 / 2 | | | | | | | | | | | | | | | | | | | | | | | | | N | 1924686-1 | KEY "E" |
| | | 1 / 2 | | | | | | | | | | | | | | | | | | | | | | | | | N | 1924685-1 | KEY "D" |
| | | 1 / 2 | | | | | | | | | | | | | | | | | | | | | | | | | N | 1924684-1 | KEY "C" |
| | | 1 / 2 | | | | | | | | | | | | | | | | | | | | | | | | | N | 1924683-1 | KEY "B" |
| | | 1 / 2 | | | | | | | | | | | | | | | | | | | | | | | | | N | 1924682-1 | KEY "A" |
| SHORTING BAR POSITION | | | TERMINAL HOLE POSITION | | | | | | | | | | | | | | | | | | | | | | | | | | |
| CAVITIES W/ A NUMERIC SYMBOL INDICATE SHORTING BAR LOADED | | | CAVITIES WITH A NUMERIC SYMBOL INDICATE CLOSED TERMINAL HOLE POSITIONS | | | | | | | | | | | | | | | | | | | | | | | | | | |
| BLANK CAVITIES INDICATE NO SHORTING BAR LOADED | | | BLANK CAVITIES INDICATE OPEN TERMINAL HOLE POSITIONS | | | | | | | | | | | | | | | | | | | | | | | | | | |

THIS DRAWING IS A CONTROLLED DOCUMENT.

DIMENSIONS: mm

TOLERANCES UNLESS OTHERWISE SPECIFIED:
0 PLC ±-
1 PLC ±0.3
2 PLC ±0.10
3 PLC ±-
4 PLC ±-
ANGLES ±1°

MATERIAL - SEE CHART ABOVE
FINISH - -

DWN R. VESTAL 24JUL2007
CHK W. WELLINSKY 24JUL2007
APVD W. WELLINSKY 24JUL2007
PRODUCT SPEC -
APPLICATION SPEC -
WEIGHT -

TE Connectivity

NAME 24 WAY ARM PLUG ASSEMBLY WITH SELECT LOAD SHORTING BARS CUSTOMER SPEC.

| SIZE | CAGE CODE | DRAWING NO | RESTRICTED TO |
|---|---|---|---|
| A1 | 00779 | C-1924674 | - |

CUSTOMER DRAWING

| SCALE | SHEET | OF | REV |
|---|---|---|---|
| 3:1 | 5 | 5 | S |

4805 (3/11)

# Mouser Electronics

Authorized Distributor

Click to View Pricing, Inventory, Delivery & Lifecycle Information:

TE Connectivity:

1924683-1