Type CDLC Carboncap High-Power Board-Mount Ultracapacitor

4 Pin Radial Type

Part Numbering System

CDLC	351	E	2R7	T11
Type	**Capacitance (F)**	**Tolerance (%)**	**Voltage (V)**	**Configuration**
CDLC - Carbon Double Layer Cell	**351** = 350	**E** = -0% / +20%	**2R7** = 2.7	**T11** = 4 pin radial

Outline Drawing and Dimensions

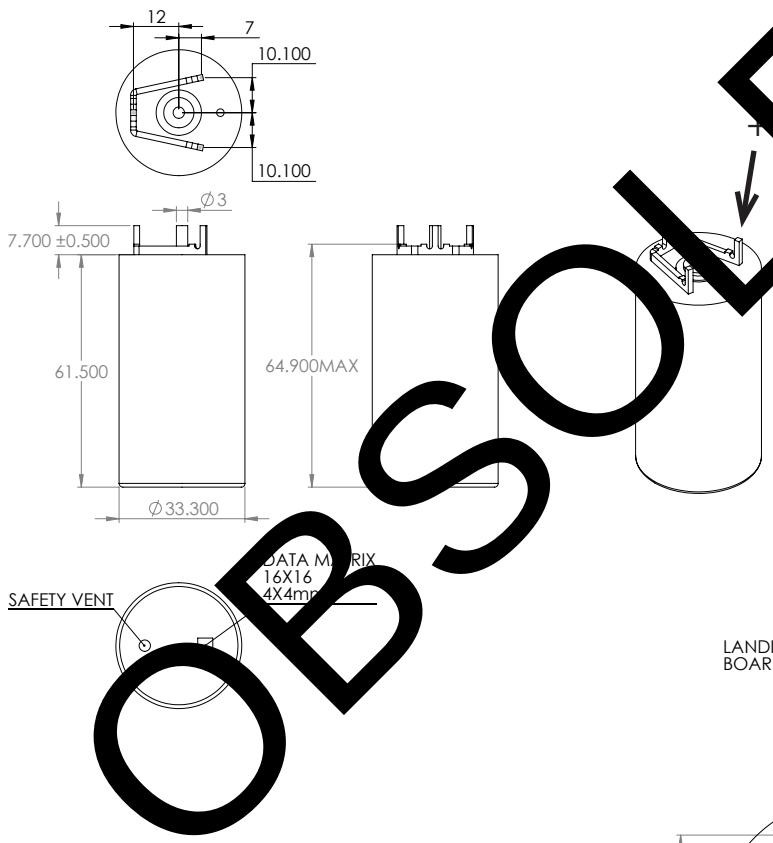

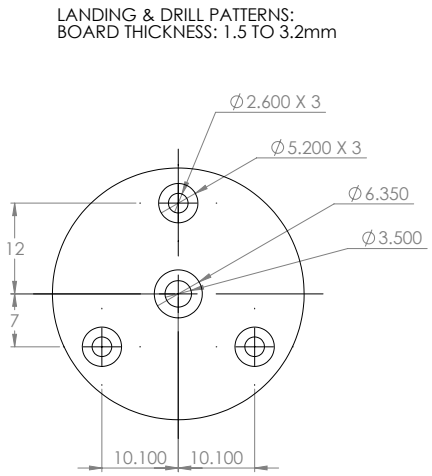

Do not reverse polarity.
Certified to UL810a, File # MH48530.

OBSOLETE