PRODUCT NUMBER

10097213–T52–XXXLF

- PLATING — 2.0–6.0µm FULL MATTE TIN, 1.27µm NICKEL MINIMUM UNDERPLATING
- POSITIONS PER ROW — 02 TO 25
- PACKAGING, NOTE 5
- LEAD FREE, RoHS COMPATIBLE, NOTE 6

TOP VIEW

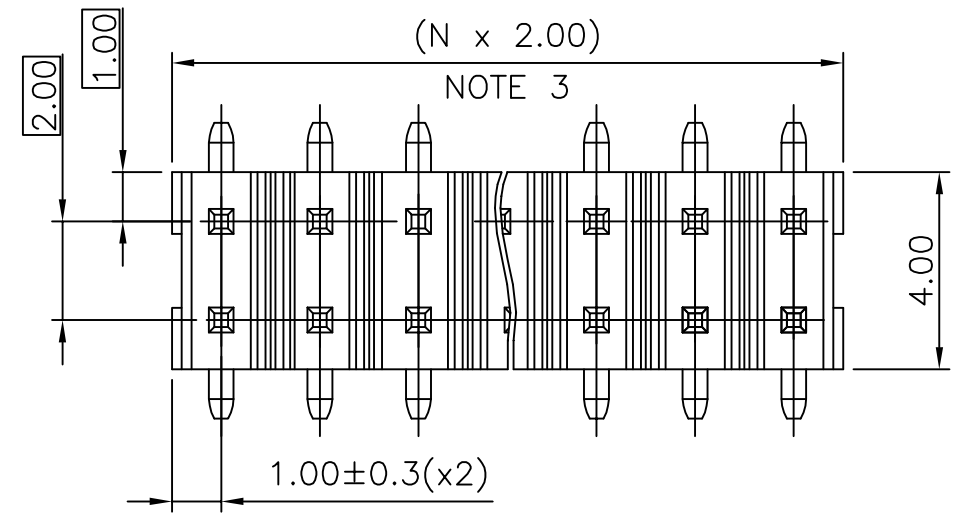

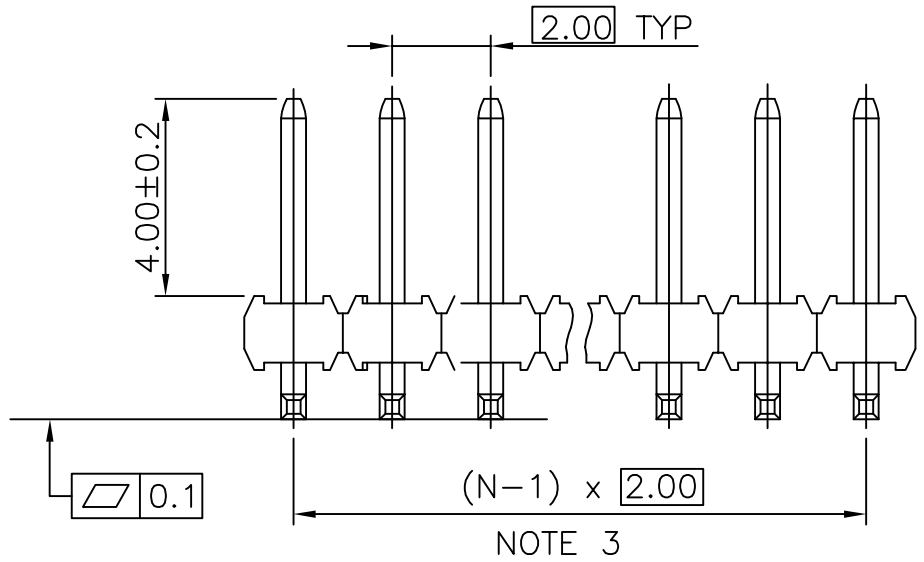

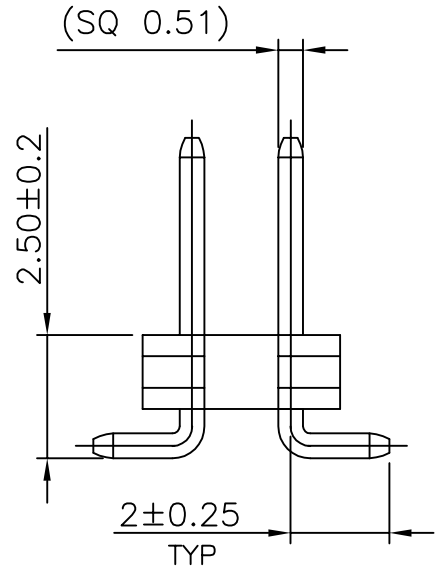

NOTES:

1. MATERIAL HOUSING: HIGH TEMP. THERMOPLASTIC UL 94V–0, COLOR BLACK
2. MATERIAL TERMINAL: COPPER ALLOY
3. TO DETERMINE DIMENSIONS:
   N = NUMBER OF POSITIONS PER ROW.
4. 7N MIN. PIN RETENTION IN EITHER DIRECTION.
5. PACKAGING:
   = PLASTIC BOX.
   A = TAPE AND REEL WITH PICK UP CAP
   SEE TA 884 FOR PRODUCT AVAILABILITY.
   U = TUBE WITHOUT CAP FROM 08POS UP TO 50POS
6. RoHS COMPATIBLE PRODUCT SPECIFICATIONS
   a – PLATING:
   – "LF" MEANS THE PRODUCT IS LEAD–FREE, 2µm MINIMUM MATTE TIN OVER 1.27µm MINIMUM NICKEL UNDERPLATE.
   b – MANUFACTURING PROCESS COMPATIBILITY
   – THE HOUSING WILL WITHSTAND EXPOSURE TO 260°C PEAK TEMPERATURE FOR 30 SECONDES IN A CONVECTION, INFRA–RED OR VAPOR PHASE REFLOW OVEN.
   c – LABELLING:
   – MEETS PACKAGING SPECS AS PER GS–14–920
   d – LEGAL STATEMENT : SEE GS–47–0004

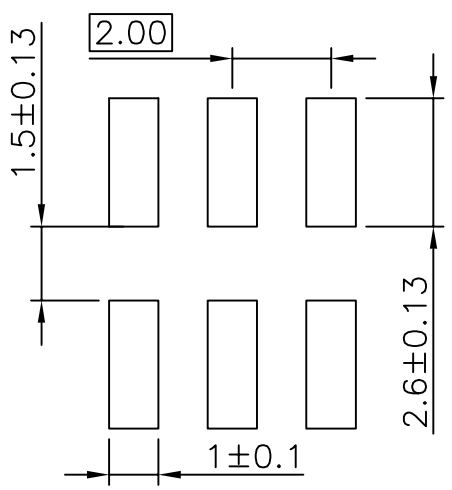

RECOMMENDED PAD LAYOUT

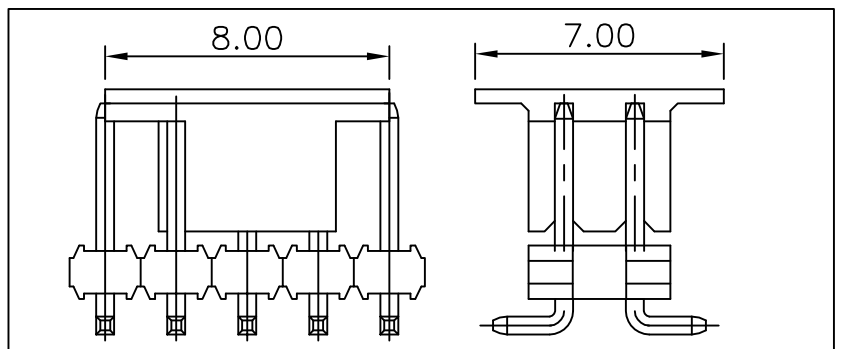

CAP DIMS FOR 2x3 POS UP TO 2x25 POS

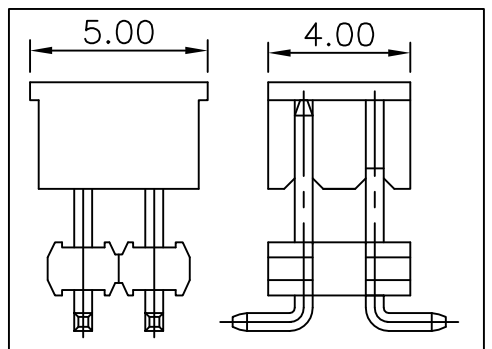

CAP DIMS FOR 2x2 POS

ltr	ecn no	dr	date
A	F10–0029	LMU	10.04.09
B	B–19188	LMU	14.10.24

dr	L.MULIN	09.02.05
engr	J.COMPAGNON	09.02.05
chr	JCO	10.04.09
appd	JCO	10.04.09

mat'l. code

surface ISO 1302

tolerance ISO 406 ISO 1101

tolerances unless otherwise specified: angles; linear .X ±0.3, .XX ±0.13, .XXX ±0.05

projection

mm

scale 1:1

product family: MINITEK

title: UNSH HEADER 2.00 mm SMT FULL TIN

dwg no: 10097213 — sheet 1 of 1 — size A3

type: CUSTOMER Drawing

sheet index — revision sheet

FCIconnect.com
Copyright FCI
form: A3
Printed: May 25, 2022
STATUS:Released
PDS: Rev :B