THIS DRAWING IS UNPUBLISHED. RELEASED FOR PUBLICATION -,- .
© COPYRIGHT - By - ALL RIGHTS RESERVED.

LOC	DIST
AD	00

REVISIONS

P	LTR	DESCRIPTION	DATE	DWN	APVD
	K2	REVISED PER ECO-11-004820	11MAR11	RK	HMR

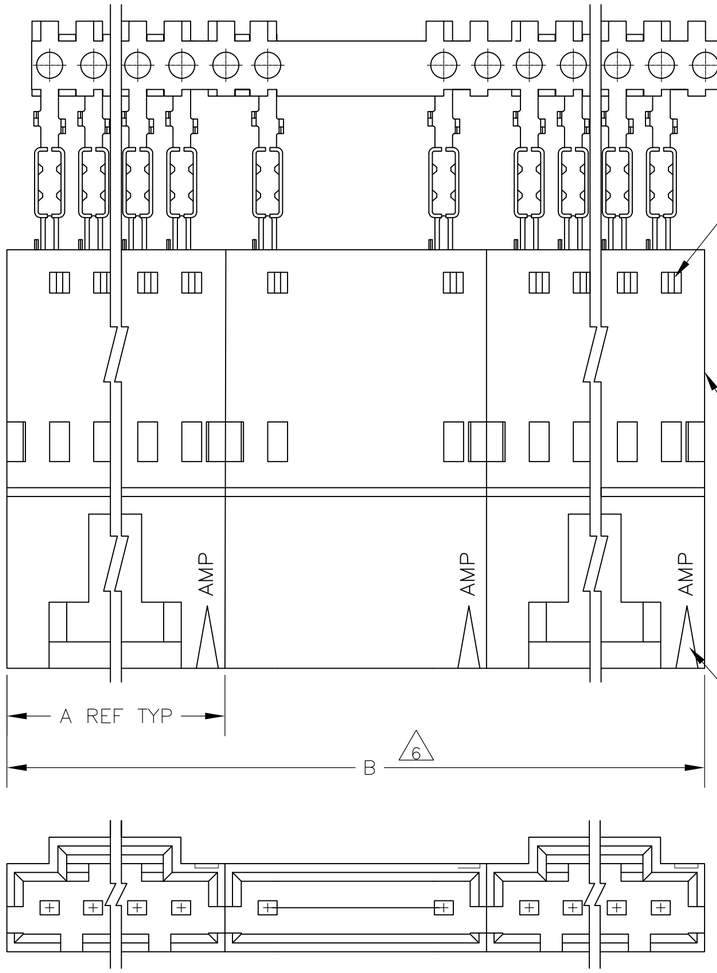

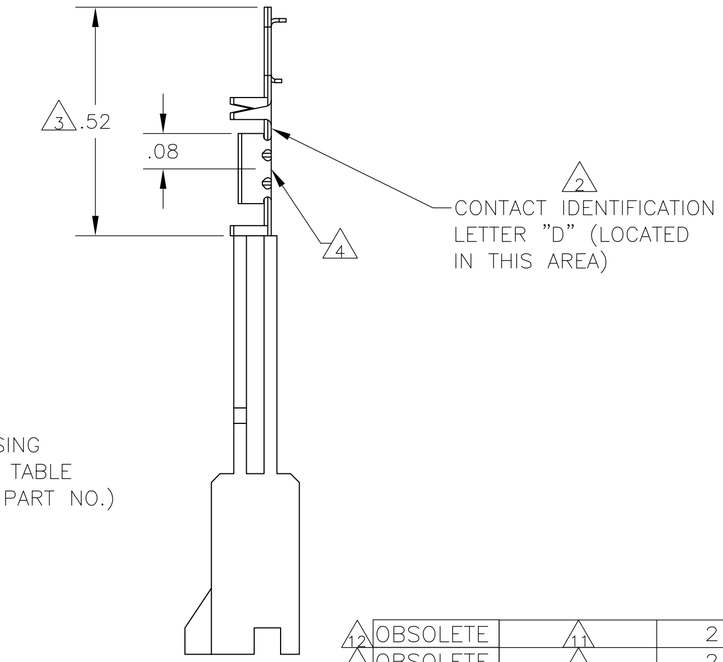

1. CONTACTS ARE LATCHED INTO THE PRELOAD WINDOWS
2. USE WITH #22–#26 AWG WIRE SIZE, .054/.030 INSULATION DIAMETER, .015 MAXIMUM INSULATION THICKNESS
3. THE DIMENSION APPLIES WITH THE FORWARD PRELOAD STOP IN CONTACT WITH THE HOUSING SURFACE
4. POINT OF MEASUREMENT FOR PLATING THICKNESS
5. FOR INDIVIDUAL ASSEMBLIES SEE PART NUMBER 103661
6. ASSEMBLIES ARE JOINED BY THE CARRIER STRIP. ORDER QUANTITY REFLECTS TOTAL NUMBER OF INDIVIDUAL ASSEMBLIES REQUIRED. SEE TABLE FOR NUMBER OF ASSEMBLIES PER STRIP.
7. MATERIAL– HOUSING: FLAME RETARDANT THERMOPLASTIC, COLOR: BLACK
   PINS: PHOS. BRONZE
8. FINISH– PINS: .000100–.000200 BRIGHT TIN–LEAD OVER .000050 NICKEL.
9. FINISH– PINS: .000100–.000200 BRIGHT TIN OVER .000050 NICKEL.
10. PRELIMINARY PART – NOT REALEASED FOR PRODUCTION.
11. FINISH– PINS: .000100–.000200 MATTE TIN OVER .000050 NICKEL.
12. OBSOLETE PARTS: OBSOLETE CIS STREAMLINING PER D.RENAUD/D.SINISI

PLATING	6	B	A	HOUSING PART NUMBER	NO OF POSN	ASSEMBLY PART NUMBER ON STRIP
12 OBSOLETE	11	2	2.59	1.295	1–103653–1	12	6–103944–1
12 OBSOLETE	11	2	2.39	1.195	1–103653–0	11	6–103944–0
	11	2	2.19	1.095	103653–9	10	5–103944–9
	11	2	1.99	.995	103653–8	9	5–103944–8
	11	2	1.79	.895	103653–7	8	5–103944–7
	11	3	2.39	.795	103653–6	7	5–103944–6
	11	2	1.39	.695	103653–5	6	5–103944–5
	11	4	2.38	.595	103653–4	5	5–103944–4
	11	4	1.98	.495	103653–3	4	5–103944–3
	11	5	1.98	.395	103653–2	3	5–103944–2
	11	8	2.36	.295	103653–1	2	5–103944–1
10	9	3	2.39	.795	103653–6	7	1–103944–3
10	9	4	1.98	.495	103653–3	4	1–103944–2
	8	2	2.59	1.295	1–103653–1	12	1–103944–1
12 OBSOLETE	8	2	2.39	1.195	1–103653–0	11	1–103944–0
	8	2	2.19	1.095	103653–9	10	103944–9
	8	2	1.99	.995	103653–8	9	103944–8
	8	2	1.79	.895	103653–7	8	103944–7
	8	3	2.39	.795	103653–6	7	103944–6
	8	2	1.39	.695	103653–5	6	103944–5
	8	4	2.38	.595	103653–4	5	103944–4
	8	4	1.98	.495	103653–3	4	103944–3
	8	5	1.98	.395	103653–2	3	103944–2
	8	8	2.36	.295	103653–1	2	103944–1

THIS DRAWING IS A CONTROLLED DOCUMENT.

DIMENSIONS: INCHES

TOLERANCES UNLESS OTHERWISE SPECIFIED:
0 PLC ± –
1 PLC ± –
2 PLC ± –
3 PLC ± –
4 PLC ± –
ANGLES ± –

MATERIAL 7

FINISH SEE TABLE

DWN R.BROWN 26JUL00
CHK K.WRIGHT 26JUL00
APVD K.WRIGHT 26JUL00
PRODUCT SPEC 108–25034
APPLICATION SPEC 114–25026
WEIGHT –

TE Connectivity

NAME SHROUDED PIN ASSY, AMPMODU MTE, SINGLE ROW, .100 CL, POLARIZED, W/ LATCH WINDOWS, FOR NO 22–NO 26 AWG WIRE SIZE, STRIP FORM

SIZE A2 | CAGE CODE 00779 | DRAWING NO C–103944 | RESTRICTED TO –

CUSTOMER DRAWING | SCALE 4:1 | SHEET 1 OF 1 | REV K2

103944

1471–9 (3/11)

Mouser Electronics

Authorized Distributor

Click to View Pricing, Inventory, Delivery & Lifecycle Information:

TE Connectivity:

103944-2