Universal current transducer - MCR-SL-CUC-100-U - 2308108

Please be informed that the data shown in this PDF Document is generated from our Online Catalog. Please find the complete data in the user's documentation. Our General Terms of Use for Downloads are valid
(http://phoenixcontact.com/download)

Universal current transducer, for measuring DC, AC, and distorted currents, 0 ... 100 A input current, 0 ... 10 V output

Your advantages

- Variable mounting on DIN rail and mounting plate
- Compact dimensions also enable distributed use
- Simple connection technology thanks to COMBICON plug-in connection terminal blocks
- Universal current measurement, no shunt required
- 3-way isolation

RoHS

Key Commercial Data

Packing unit	1 pc
GTIN	4 046356 569736
GTIN	4046356569736

Technical data

Dimensions

Width	90 mm
Height	33.8 mm
Depth	85 mm

Ambient conditions

Ambient temperature (operation)	-40 °C ... 65 °C
Ambient temperature (storage/transport)	-40 °C ... 85 °C

Input data

Input current range	0 A ... 100 A
Overload capacity	6 x I_{IN}
Frequency measuring range	20 Hz ... 6000 Hz (0 Hz)

Universal current transducer - MCR-SL-CUC-100-U - 2308108

Technical data

Input data

Connection method	Cable design: 32 mm diameter

Output data

Output name	Voltage output
Voltage output signal	0 V ... 10 V
Load/output load voltage output	≥ 10 kΩ

Switching output

Output name	No switching output

Power supply

Nominal supply voltage	24 V DC
Supply voltage range	20 V DC ... 30 V DC
Max. current consumption	30 mA

Connection data

Conductor cross section solid min.	0.25 mm²
Conductor cross section solid max.	2.5 mm²
Conductor cross section AWG min.	24
Conductor cross section AWG max.	12
Conductor cross section flexible min.	0.2 mm²
Conductor cross section flexible max.	2.5 mm²
Stripping length	10 mm

General

Maximum transmission error	<± 1 % (of final value)
Temperature coefficient, typical	0.02 %/K (0 ... 60 °C)
	0.04 %/K (-40 °C ... 65 °C)
Linearity error	<± 1 % (From the range end value)
Step response (10-90%)	150 ms
Overvoltage category	III
Degree of pollution	2
Rated insulation voltage	300 V AC
Color	green
Housing material	Frianyl B63 V0 GV30
Conformance	CE-compliant
UL, USA/Canada	UL/C-UL listed UL 508

Standards and Regulations

Conformance	CE-compliant
UL, USA/Canada	UL/C-UL listed UL 508

Environmental Product Compliance

China RoHS	Environmentally Friendly Use Period = 25;

Universal current transducer - MCR-SL-CUC-100-U - 2308108

Technical data

Environmental Product Compliance

	For details about hazardous substances go to tab “Downloads”, Category “Manufacturer's declaration”

Drawings

Dimensional drawing

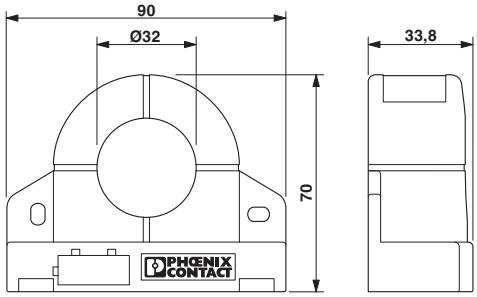

Circuit diagram

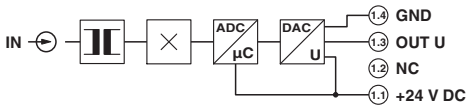

Schematic diagram

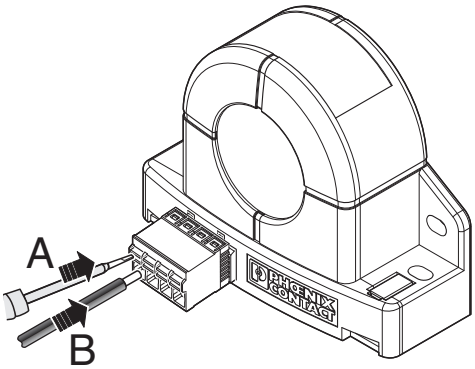

Approvals

Approvals

Approvals

UL Listed / cUL Listed / EAC / cULus Listed

Ex Approvals

Universal current transducer - MCR-SL-CUC-100-U - 2308108

Approvals

Approval details

UL Listed		http://database.ul.com/cgi-bin/XYV/template/LISEXT/1FRAME/index.htm	FILE E 123528
cUL Listed		http://database.ul.com/cgi-bin/XYV/template/LISEXT/1FRAME/index.htm	FILE E 123528
EAC			RU C-DE.A*30.B.01082
cULus Listed			

Phoenix Contact 2019 © - all rights reserved
http://www.phoenixcontact.com

PHOENIX CONTACT GmbH & Co. KG
Flachsmarktstr. 8
32825 Blomberg
Germany
Tel. +49 5235 300
Fax +49 5235 3 41200
http://www.phoenixcontact.com