THIS DRAWING IS UNPUBLISHED. RELEASED FOR PUBLICATION -,- .
© COPYRIGHT - BY TYCO ELECTRONICS CORPORATION. ALL RIGHTS RESERVED.

LOC	DIST
AD	00

REVISIONS

P	LTR	DESCRIPTION	DATE	DWN	APVD
	F2	REV PER ECO-10-001916	02FEB2010	JY	SY
	G	ECR-10-018652	10SEP10	JS	MQW
	H	ECO-12-003005	22FEB2012	SY	MQW
	J	ECR-12-010544	05DEC12	SY	AC

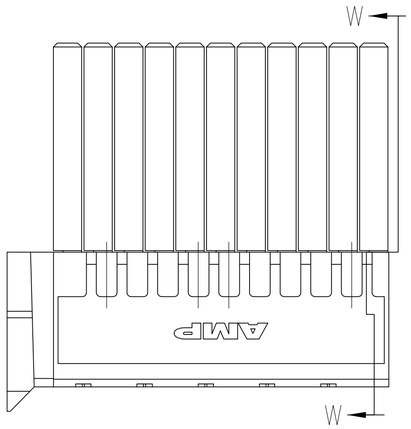

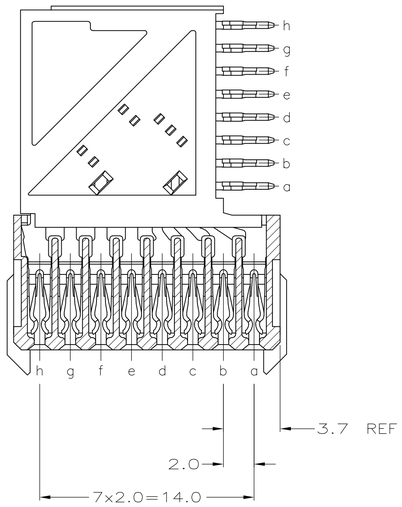

SECTION W–W

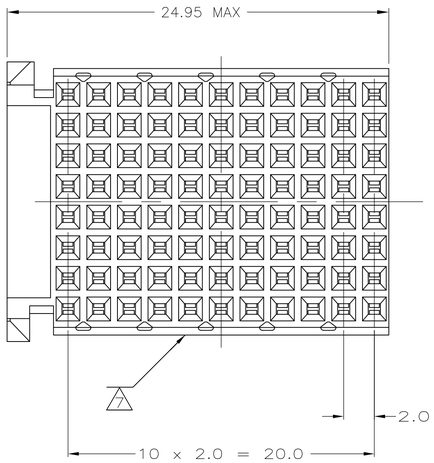

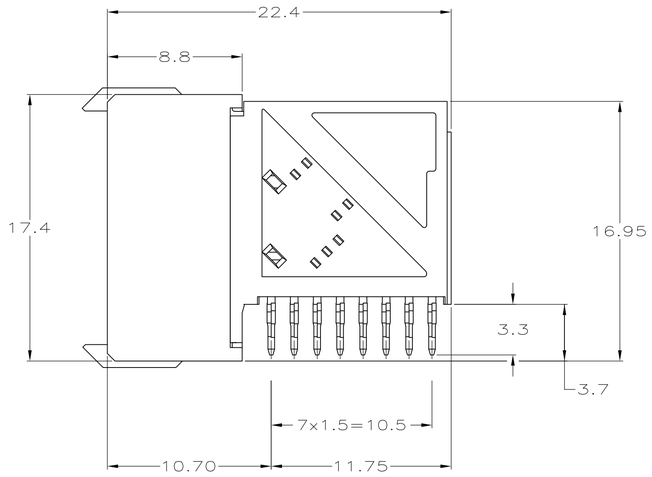

1. MATERIAL:
   CONTACT: PHOSPHOR BRONZE.
   HOUSING: GLASS–FILLED POLYESTER.
2. GENERAL PLATING SPECIFICATION: UNDERPLATING (ENTIRE CONTACT): 1.27µm MIN NICKEL AND ACTION PIN: 0.5µm MIN TIN/LEAD. FOR PLATING OF MATING SURFACES SEE APPLICABLE SPECIFICATION REFERENCE FOR EACH DASH NUMBER.
3. CONFORMS TO ALL TESTING ACCORDING TO IEC 61076–4–101 PERFORMANCE LEVEL 2.
4. CONNECTOR TESTED AND QUALIFIED AGAINST TELCORDIA GR–1217–CORE QUALITY LEVEL 3, CENTRAL OFFICE APPLICATIONS.
5. PLATED THROUGH HOLES AT 2x1.5mm GRID. 88 TOTAL HOLES.
6. CONTACT AREA LUBRICATED WITH BELLCORE APPROVED LUBRICANT. TECHNICAL REFERENCE: GR–1217–CORE, ISSUE 1, NOVEMBER 1991.
7. CONNECTOR PRINTED WITH PART NUMBER AND DATE CODE THIS SIDE. ADDITIONAL CHARACTERS OR MARKINGS, AS WELL AS THE LOCATION OF THE MARKINGS, MAY BE ADDED FOR TRACEABILITY BASED UPON MANUFACTURERS DISCRETION.
8. OBSOLETE PARTS: OBSOLETE CIS STREAMLINING PER D.RENAUD/D.SINISI
9. 0.76µm MIN GOLD PLATING AT MATING SURFACES.

PCB HOLE DIMENSIONS		
DRILLED HOLE	⌀0.7	±0.025 mm
FIN. HOLE	⌀0.55 TO 0.65	mm
Cu–thks	⌀0.025 TO 0.050	mm
SnPb–thks	⌀0.004 TO 0.010	mm

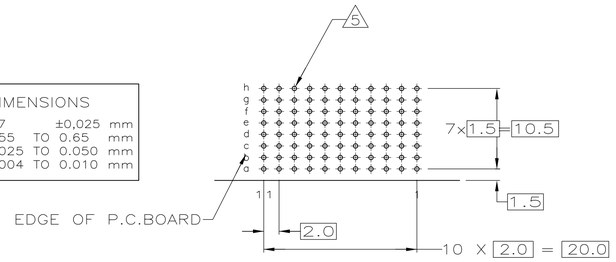

RECOMMENDED PCB HOLE LAYOUT
COMPONENT SIDE
SCALE 2.5:1

		FINISH	PART NUMBER
		2 3 9	3–646446–0
8	OBSOLETE	2 4 6	~~646446–9~~
	OBSOLETE	2 3	~~646446–1~~

THIS DRAWING IS A CONTROLLED DOCUMENT.

DIMENSIONS: mm

TOLERANCES UNLESS OTHERWISE SPECIFIED:
0 PLC ± –
1 PLC ± 0.1
2 PLC ± 0.05 ±0.2
3 PLC ± –
4 PLC ± –
ANGLES ± –

MATERIAL 1

FINISH SEE TABLE

DWN B.CARBO 06DEC05
CHK G.SKIPPER 06DEC05
APVD G.SKIPPER 06DEC05
PRODUCT SPEC –
APPLICATION SPEC –
WEIGHT –

Tyco Electronics
Tyco Electronics Corporation
Harrisburg, PA 17105–3608

NAME R/A RECEPTACLE ASSY, 88 POSN, TTR 8 ROW, TYPE F, Z–PACK 2mm HM –

SIZE	CAGE CODE	DRAWING NO	RESTRICTED TO
A1	00779	C–646446	–

CUSTOMER DRAWING | SCALE 5:1 | SHEET 1 OF 1 | REV J

Mouser Electronics

Authorized Distributor

Click to View Pricing, Inventory, Delivery & Lifecycle Information:

TE Connectivity:

3-646446-0