(1:1)

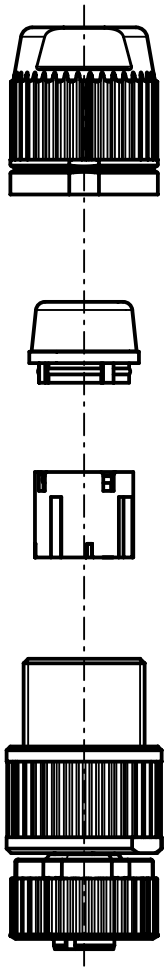

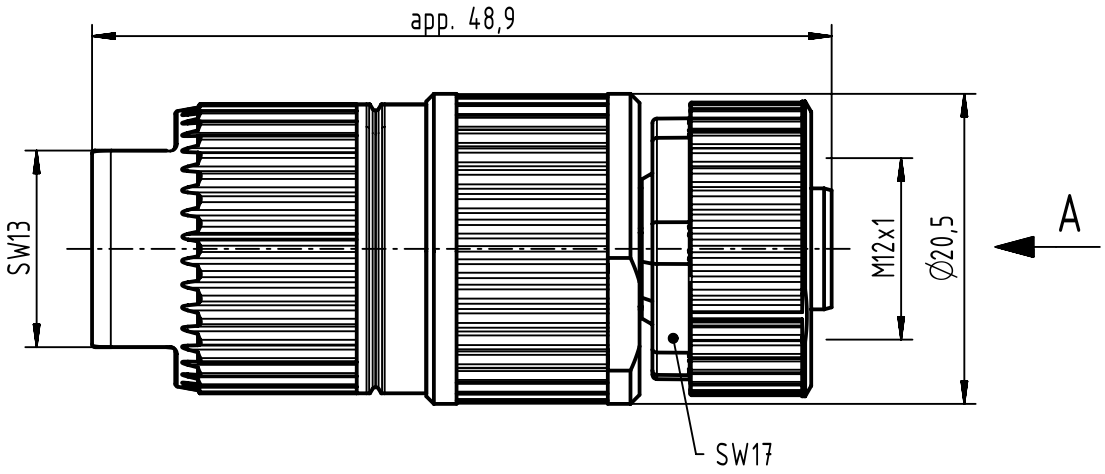

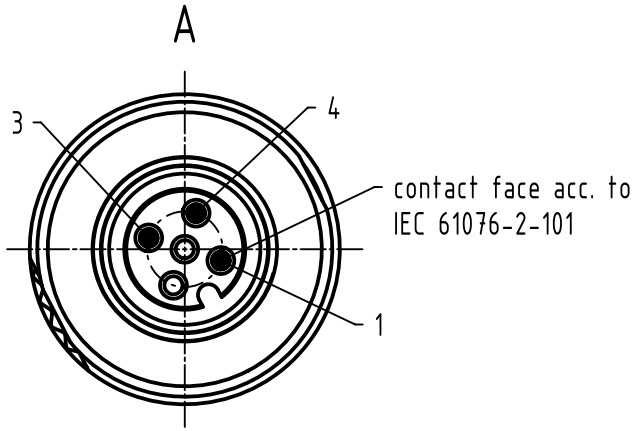

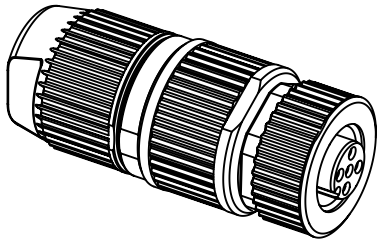

conducter cross section	0,34 - 0,75mm² AWG22-AWG18
cable outside diameter	6,0 - 8,0mm

All Dimensions in mm
Original Size DIN A4

Scale 2:1

Free size tol.

Ref.

Sub. TB 21032122306 / 500000095997 / 2015-11-13

All rights reserved

Department EC PD - DE

HARTING Electronics GmbH
D-32339 Espelkamp

Created by	Inspected by	Standardisation	Date	State
HELLMANN	EISFELD	HOFFMANN	2016-02-25	Final Release

Title HARTING M12-L 3-pole A-coded female

Doc-Key / ECM-Nr. 100190993/UGD/002/D 500000100313

Type TB

Number 21032122306

Rev. D

Page 1/1

A4