THIS DRAWING IS UNPUBLISHED. RELEASED FOR PUBLICATION -,- .
© COPYRIGHT - BY TYCO ELECTRONICS CORPORATION. ALL RIGHTS RESERVED.

LOC	DIST
GP	00

REVISIONS

P	LTR	DESCRIPTION	DATE	DWN	APVD
	L	REVISED PER ECO-09-024765	12JAN2010	CR	SB

1. HOUSING: BLACK POLYESTER, UL 94V-0 RATED
   CONTACTS: BRASS
   SHELLS: CARBON STEEL
   SCREWLOCK: ZINC
   INSERT: BRASS
2. GOLD FLASH FOR LENGTH OF 3.81 [.150] MIN FROM MATING END, 2.54μm [.000100] MIN TIN OR TIN-LEAD FOR A LENGTH OF DIMENSION A FROM OPPOSITE END, BOTH OVER 1.27μm [.000050] MIN NICKEL.
3. GOLD PLATED FOR LENGTH OF 3.81 [.150] MIN FROM MATING END, 0.76μm [.000030] MIN GOLD IN MATED AREA, 2.54μm [.000100] MIN TIN OR TIN-LEAD FOR A LENGTH OF DIMENSION A FROM OPPOSITE END, BOTH OVER 1.27μm [.000050] MIN NICKEL.
   -OR-
   GOLD FLASH OVER PALLADIUM NICKEL FOR A LENGTH OF 3.81 [.150] MIN FROM MATING END, 0.76μm [.000030] MIN PALLADIUM NICKEL IN MATED AREA, 2.54μm [.000100] MIN TIN OR TIN-LEAD FOR A LENGTH OF DIMENSION A FROM OPPOSITE END, BOTH OVER 1.27μm [.000050] MIN NICKEL.
4. SHELLS: 5.08μm [.000200] MIN TIN OVER 2.54μm [.000100] MIN COPPER
   CONTACTS: SEE TABLE
5. DATUMS AND BASIC DIMENSIONS ESTABLISHED BY CUSTOMERS.
6. 2.79[.110] MAX IN SHELL TAB CLINCH AREAS.

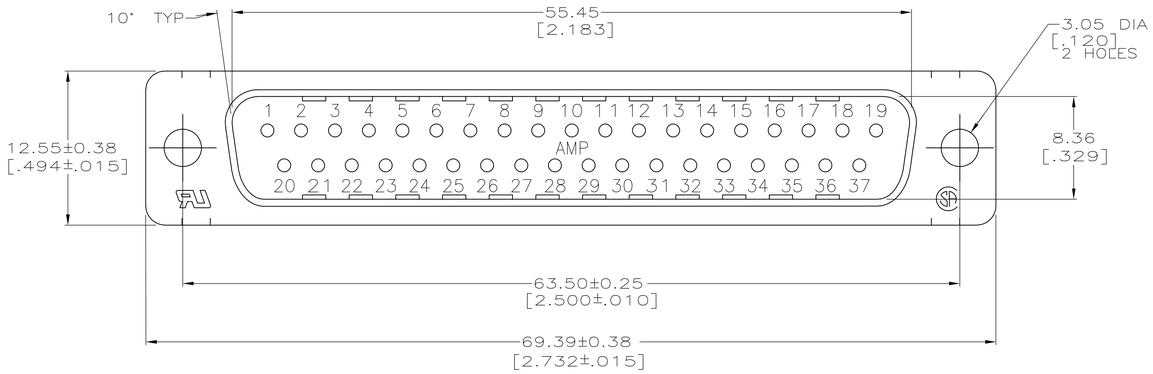

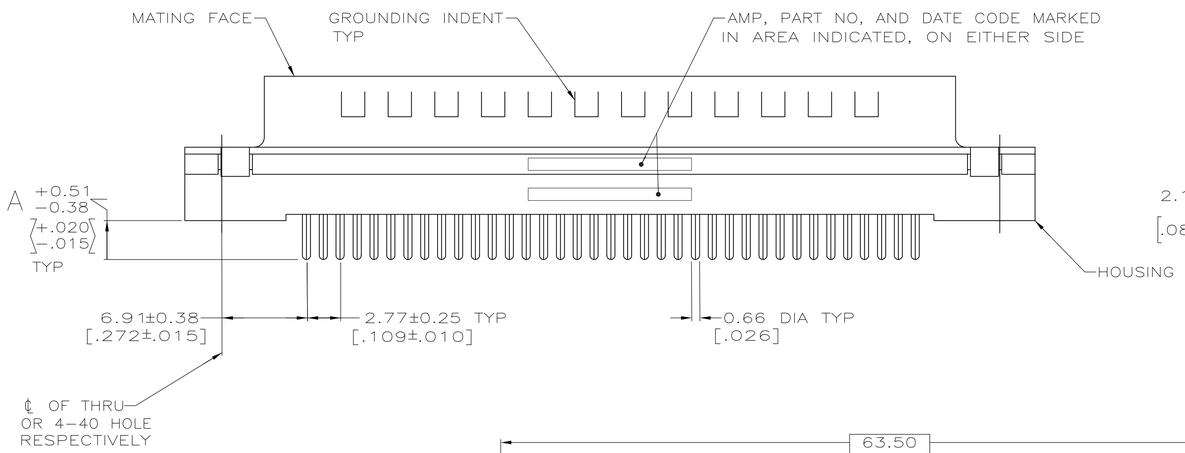

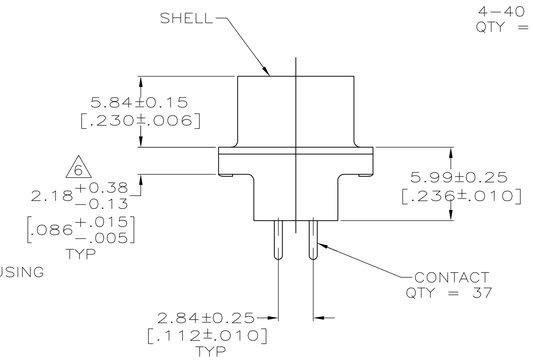

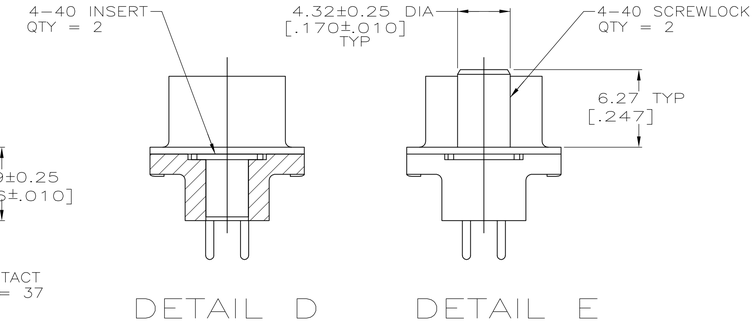

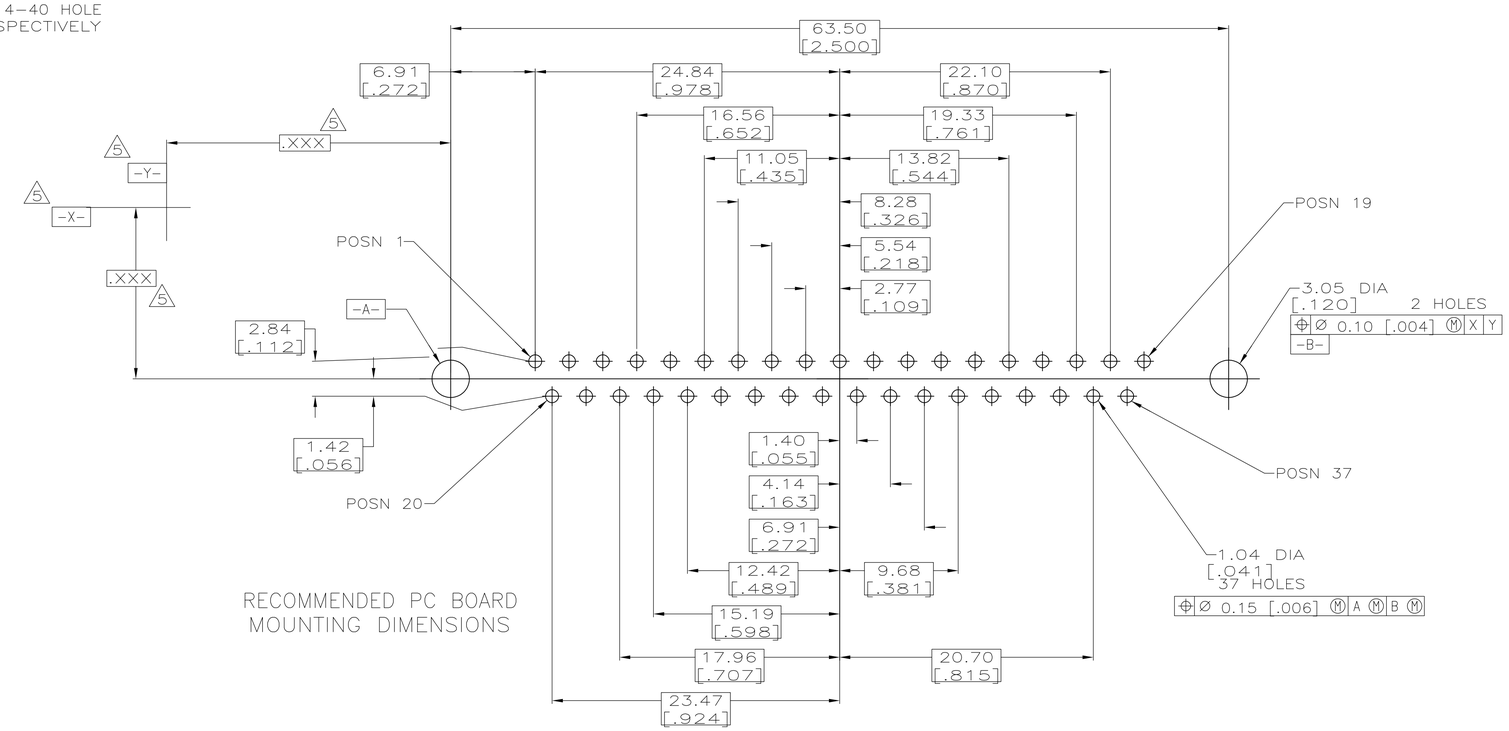

RECOMMENDED PC BOARD
MOUNTING DIMENSIONS

	DIM A	MOUNTING HARDWARE	CONTACT FINISH	PART NUMBER
OBSOLETE	6.35 [.250]	4-40 SCREWLOCK (DETAIL E)	3	1-747375-8
OBSOLETE	6.35 [.250]	4-40 SCREWLOCK (DETAIL E)	2	1-747375-7
OBSOLETE	4.32 [.170]	4-40 SCREWLOCK (DETAIL E)	3	1-747375-6
OBSOLETE	4.32 [.170]	4-40 SCREWLOCK (DETAIL E)	2	1-747375-5
OBSOLETE	3.18 [.125]	4-40 SCREWLOCK (DETAIL E)	3	1-747375-4
SUPSD BY 747375-8	3.18 [.125]	4-40 SCREWLOCK (DETAIL E)	2	1-747375-3
OBSOLETE	6.35 [.250]	4-40 INSERT (DETAIL D)	3	1-747375-2
OBSOLETE	6.35 [.250]	4-40 INSERT (DETAIL D)	2	1-747375-1
SUPSD BY 747375-8	4.32 [.170]	4-40 INSERT (DETAIL D)	3	1-747375-0
OBSOLETE	4.32 [.170]	4-40 INSERT (DETAIL D)	2	747375-9
	3.18 [.125]	4-40 INSERT (DETAIL D)	3	747375-8
SUPSD BY 747375-8	3.18 [.125]	4-40 INSERT (DETAIL D)	2	747375-7
OBSOLETE	6.35 [.250]	–	3	747375-6
OBSOLETE	6.35 [.250]	–	2	747375-5
OBSOLETE	4.32 [.170]	–	3	747375-4
OBSOLETE	4.32 [.170]	–	2	747375-3
	3.18 [.125]	–	3	747375-2
OBSOLETE	3.18 [.125]	–	2	747375-1

THIS DRAWING IS A CONTROLLED DOCUMENT.

DIMENSIONS: mm [INCHES]

TOLERANCES UNLESS OTHERWISE SPECIFIED:
0 PLC ± –
1 PLC ± –
2 PLC ± 0.13 [.005]
3 PLC ± –
4 PLC ± –
ANGLES ± 2°

MATERIAL 1
FINISH 4

DWN J. McCLINTON 12/01/89
CHK R. STONE 02/01/90
APVD C. ROHDE 2-02-90
PRODUCT SPEC 108-40025
APPLICATION SPEC 114-40023
WEIGHT –
CUSTOMER DRAWING

Tyco Electronics
Tyco Electronics Corporation
Harrisburg, PA 17105-3608

NAME
PLUG ASSEMBLY, SIZE 4, 37 POSITION, VERTICAL, FRONT METAL SHELL, AMPLIMITE® HD-20

SIZE	CAGE CODE	DRAWING NO	RESTRICTED TO
A1	00779	C-747375	–

SCALE 4:1 SHEET 1 OF 1 REV L

Mouser Electronics

Authorized Distributor

Click to View Pricing, Inventory, Delivery & Lifecycle Information:

TE Connectivity:

747375-2