THIS DRAWING IS UNPUBLISHED. RELEASED FOR PUBLICATION 20
© COPYRIGHT 20 - ALL RIGHTS RESERVED.

LOC	DIST
CM	00

REVISIONS

P	LTR	DESCRIPTION	DATE	DWN	APVD
	R1	REVISED PER ECR-15-007038	05NOV2015	NK	PQ

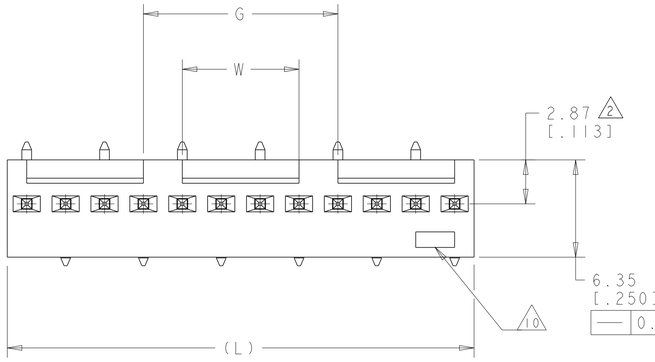

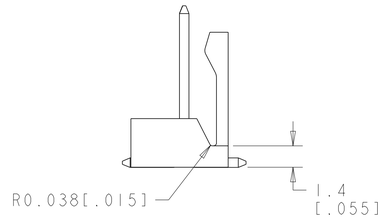

TYPICAL END VIEW
FOR -2 THRU -7

0.2 [.008]
ALL POSTS

0.25 [.010] M A
ALL POSTS

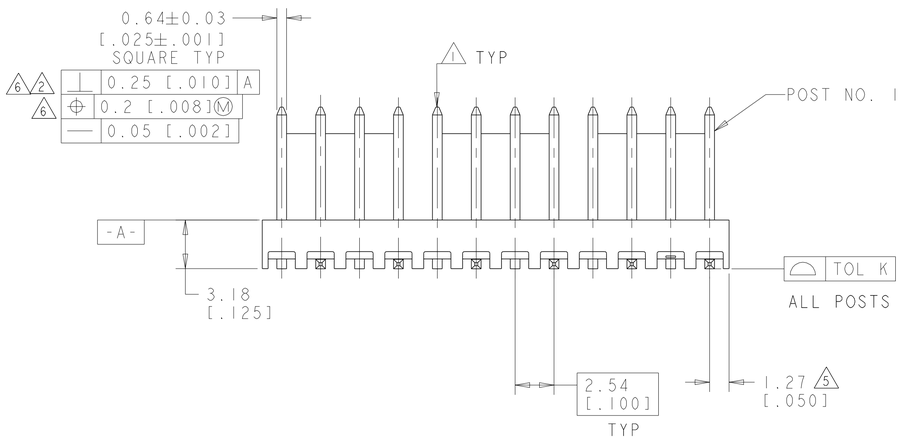

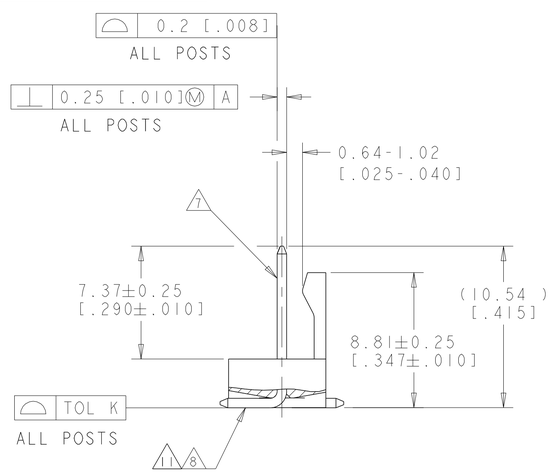

1. POST WITHSTAND 13 NEWTONS (3 LBS) MIN AXIAL FORCE IN DIRECTION SHOWN WITHOUT DISLODGING.
2. MEASURED AT -A-.
3. PARTS COMPLY WITH SOLDERABILITY SPEC 109-11-2.
4. MATERIAL:
   HOUSING: NYLON, 4/6, HIGH TEMP, BLACK..
   POST - COPPER ALLOY (SEE TABLE FOR PLATING).
5. COORDINATE DIMENSION APPLIES FROM CENTER OF ACTUAL FEATURE.
6. POSTS TO BE MEASURED WHEN STRIP HELD FLAT.
7. PLATING: GOLD PLATE AREA, 0.00038 [.000015] GOLD OR 0.00008 [.000003] MIN GOLD FLASH OVER 0.00030 [.000012] PALLADIUM NICKEL, PER TE CONNECTIVITY'S DISCRETION, ALL SIDES, OVER NICKEL UNDERPLATE, 0.00127 [.000050] MIN, ALL SIDES AND ENTIRE LENGTH OF POST.
8. MATTE TIN PLATE AREA, 0.00381-0.00889 [.000150-.000350] THICK, ALL FOUR SIDES, 3.56 [.140] MIN.
9. DIMENSIONS IN BRACKETS ARE IN INCHES.
10. TE LOGO,UL,AND CSA TRADEMARKS TO APPEAR ON THIS SURFACE.
11. MATTE TIN PLATE AREA, 0.00381-0.00889 [.000150-.000350] THICK, ALL FOUR SIDES, 3.56 [.140] MIN.
12. OBSOLETE PARTS: OBSOLETE CIS STREAMLINING PER D.RENAUD/D.SINISI

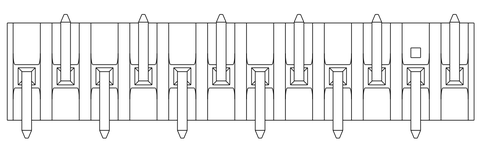

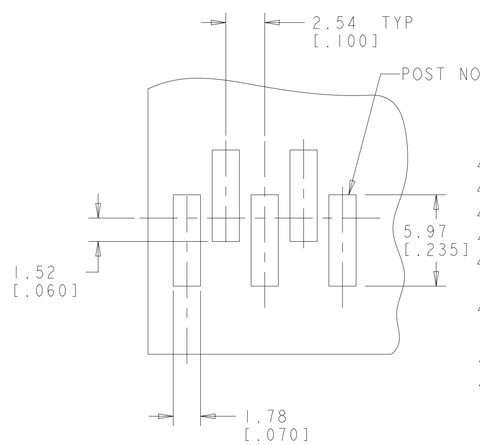

RECOMMENDED MOUNTING HOLE PATTERN
FOR USE WITH 0.25 [.010] THICK STENCIL

		0.15 [.006]	7.62 [.300]	12.70 [.500]	30.48 [1.200]	12	4-647167-2
		0.15 [.006]	-	10.16 [.400]	27.94 [1.100]	11	4-647167-1
		0.15 [.006]	-	7.62 [.300]	25.40 [1.000]	10	4-647167-0
		0.15 [.006]	-	5.08 [.200]	22.86 [.900]	9	3-647167-9
		0.15 [.006]	-	2.54 [.100]	20.32 [.800]	8	3-647167-8
	7 11	0.15 [.006]	-	-	17.78 [.700]	7	3-647167-7
		0.15 [.006]	-	-	15.24 [.600]	6	3-647167-6
		0.15 [.006]	-	-	12.70 [.500]	5	3-647167-5
		0.15 [.006]	-	-	10.16 [.400]	4	3-647167-4
		0.15 [.006]	-	-	7.62 [.300]	3	3-647167-3
		0.15 [.006]	-	-	5.08 [.200]	2	3-647167-2
OBSOLETE		0.15 [.006]	7.62 [.300]	12.70 [.500]	30.48 [1.200]	12	~~1-647167-2~~
12 SUP 4-647167-1		0.15 [.006]	-	10.16 [.400]	27.94 [1.100]	11	1-647167-1
12 SUP 4-647167-0		0.15 [.006]	-	7.62 [.300]	25.40 [1.000]	10	1-647167-0
12 SUP 3-647167-9		0.15 [.006]	-	5.08 [.200]	22.86 [.900]	9	647167-9
12 SUP 3-647167-8		0.15 [.006]	-	2.54 [.100]	20.32 [.800]	8	647167-8
12 SUP 3-647167-7	7 8	0.15 [.006]	-	-	17.78 [.700]	7	647167-7
OBSOLETE		0.15 [.006]	-	-	15.24 [.600]	6	~~647167-6~~
12 SUP 3-647167-5		0.15 [.006]	-	-	12.70 [.500]	5	647167-5
OBSOLETE		0.15 [.006]	-	-	10.16 [.400]	4	~~647167-4~~
12 SUP 3-647167-3		0.15 [.006]	-	-	7.62 [.300]	3	647167-3
12 SUP 3-647167-2		0.15 [.006]	-	-	5.08 [.200]	2	647167-2
POST FINISH		TOL K	W	G	L	NO OF POSN	PART NO

THIS DRAWING IS A CONTROLLED DOCUMENT.

DIMENSIONS: mm[INCHES]

TOLERANCES UNLESS OTHERWISE SPECIFIED:
0 PLC ±-
1 PLC ±-
2 PLC ±0.13[.005]
3 PLC ±-
4 PLC ±-
ANGLES ±0° 30'

MATERIAL - 4
FINISH - 4

DWN 14-NOV-2001 K. WHITAKER
CHK 14-NOV-2001 D. BOSSI
APVD 14-NOV-2001 D. BOSSI
PRODUCT SPEC -
APPLICATION SPEC -
WEIGHT -

TE Connectivity

NAME MTA-100 HEADER ASSEMBLY,SURFACE MOUNT, FRICTION LOCK,.025 SQUARE STRAIGHT POST, .000015 GOLD

SIZE	CAGE CODE	DRAWING NO	RESTRICTED TO
A1	00779	C-647167	-

CUSTOMER DRAWING | SCALE 5:1 | SHEET 1 OF 1 | REV R1

4805 (3/11)

Mouser Electronics

Authorized Distributor

Click to View Pricing, Inventory, Delivery & Lifecycle Information:

TE Connectivity:

3-647167-2