CKT	A	B	SLOTS LOCATION
02	4.93 / .194	2.54±0.05 / .100±.002	NONE
03	7.47 / .294	5.08 ±0.10 / .200 ±.004	NONE
04	10.01 / .394	7.62 ±0.13 / .300 ±.005	NONE
05	12.55 / .494	10.16±0.13 / .400 ±.005	NONE
06	15.09 / .594	12.70±0.13 / .500 ±.005	4, 5
07	17.63 / .694	15.24±0.13 / .600 ±.005	4, 5
08	20.17 / .794	17.78±0.15 / .700 ±.006	4, 5
09	22.71 / .894	20.32 ±0.15 / .800 ±.006	4, 5
10	25.25 / .994	22.86±0.15 / .900 ±.006	4, 5
11	27.79 / 1.094	25.40 ±0.18 / 1.000 ±.007	4, 5 8, 9
12	30.33 / 1.194	27.94 ±0.18 / 1.100 ±.007	4, 5 8, 9
13	32.87 / 1.294	30.48±0.18 / 1.200±.007	4, 5 8, 9
14	35.41 / 1.394	33.02±0.18 / 1.300±.007	4, 5 8, 9
15	37.95 / 1.494	35.56±0.20 / 1.400±.008	4, 5 12, 13
16	40.49 / 1.594	38.10±0.20 / 1.500±.008	4, 5 12, 13
17	43.03 / 1.694	40.64 ±0.20 / 1.600 ±.008	4, 5 12, 13
18	45.57 / 1.794	43.18±0.20 / 1.700±.008	4, 5 12, 13
19	48.11 / 1.894	45.72±0.23 / 1.800±.009	4, 5 16, 17
20	50.65 / 1.994	48.26±0.23 / 1.900±.009	4, 5 16, 17
21	53.19 / 2.094	50.80 ±0.23 / 2.000 ±.009	4, 5 16, 17
22	55.73 / 2.194	53.34±0.23 / 2.100±.009	4, 5 16, 17
23	58.27 / 2.294	55.88 ±0.23 / 2.200 ±.009	4, 5 20, 21
24	60.81 / 2.394	58.42 ±0.25 / 2.300 ±.010	4, 5 20, 21
25	63.35 / 2.494	60.96 ±0.25 / 2.400 ±.010	4, 5 20, 21
26	65.89 / 2.594	63.50 ±0.25 / 2.500 ±.010	4, 5 20, 21
27	68.43 / 2.694	66.04 ±0.25 / 2.600 ±.010	4, 5 24, 25
28	70.97 / 2.794	68.58±0.25 / 2.700±.010	4, 5 24, 25

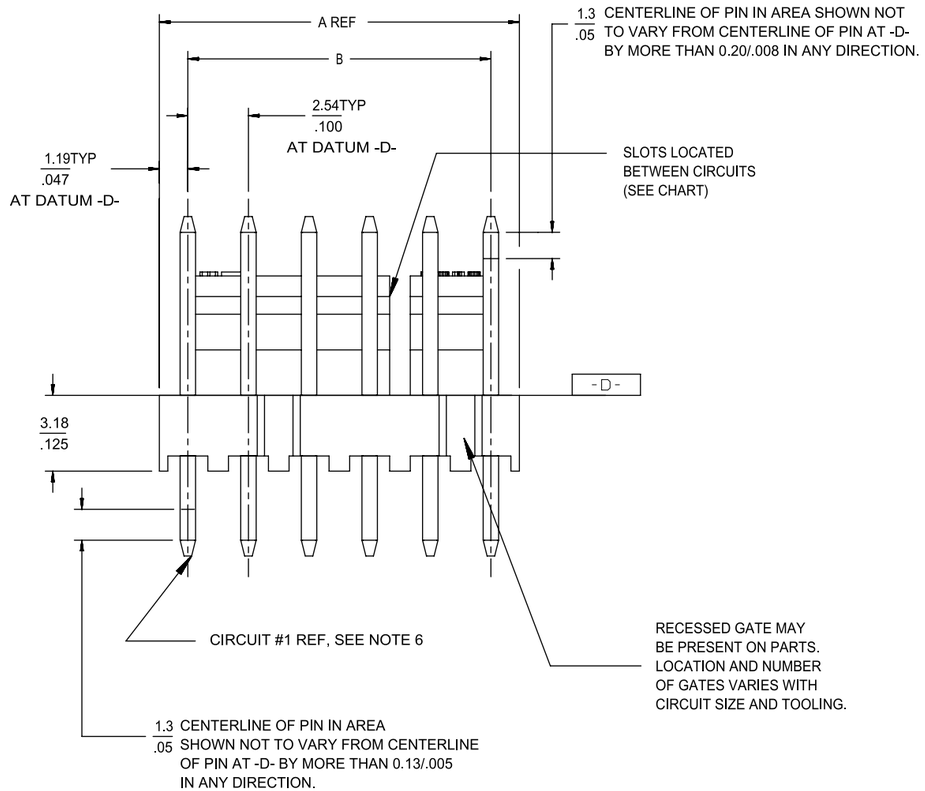

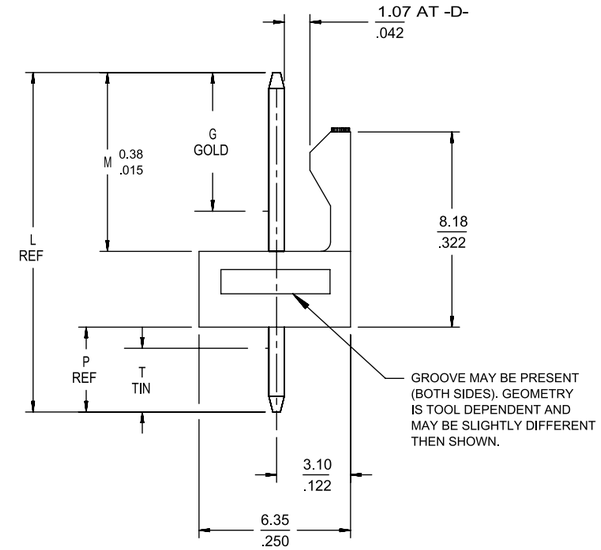

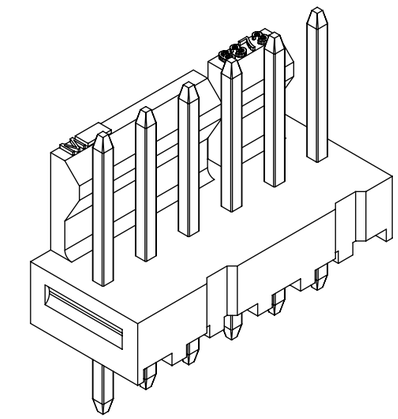

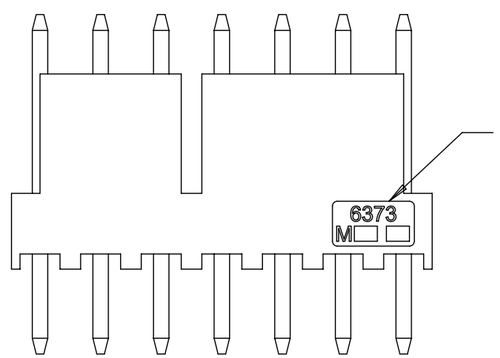

ALTERNATE ENGRAVING LOCATION (7-12 CKT PARTS ONLY). LOCATION IS DEPENDENT ON TOOLING.

NOTES:
1. MATERIAL: NYLON, UL 94V-0, COLOR - WHITE.
2. FINISH:
   (197) = OVERALL REFLOWED MATTE TIN: 0.00152/.000060 MIN OVER 0.00127/.000050 MIN NICKEL.
   (154) = OVERALL TIN: 0.00254/.000100 MIN OVER 0.00127/.000050 MIN NICKEL.
   (222) = OVERALL MATTE TIN: 0.00254/.000100 MIN OVER 0.00127/.000050 MIN NICKEL.
   (225) = SELECT GOLD: 0.00005/.000002 MIN, SELECT MATTE TIN: 0.00254/.000100, BOTH OVER 0.00127/.000050 MIN NICKEL.
   (228) = SELECT GOLD: 0.00076/.000030 MIN, SELECT MATTE TIN: 0.00254/.000100, BOTH OVER 0.00127/.000050 MIN NICKEL.
   (231) = SELECT GOLD: 0.00127/.000050 MIN, SELECT MATTE TIN: 0.00254/.000100, BOTH OVER 0.00127/.000050 MIN NICKEL.
   (241) = SELECT GOLD: 0.00051/.000020 MIN, SELECT MATTE TIN: 0.00254/.000100, BOTH OVER 0.00127/.000050 MIN NICKEL.
3. PRODUCT SPECIFICATION AND PROCESS PARAMETERS: PS-10-07.
4. PACKAGING INFORMATION: SEE LEGEND.
5. PARTS ARE STACKABLE END TO END ON 2.54/.100 CENTERS.
6. CIRCUIT ONE DESIGNATION IS USED TO DEFINE VOID LOCATION. CIRCUIT ONE MAY OR MAY NOT LINE UP WITH CIRCUIT ONE ON THE MATING HOUSING.
7. PIN PUSHOUT FORCE: 2 LBS MIN.
8. FOR PIN DIMENSIONS, SEE APPLICABLE DRAWING.
9. THIS PART CONFORMS TO CLASS B REQUIREMENTS OF COSMETIC SPECIFICATION PS-45499-002.

A-6373-N * *** * - *

NO OF CKTS:
OPTIONS: SEE CHART
FINISH: SEE CHART
PACKAGING:
BLANK = BULK PACK
A = TUBE PACK
B = TAPE AND REEL PACK
VOIDED CKT: SEE CHART

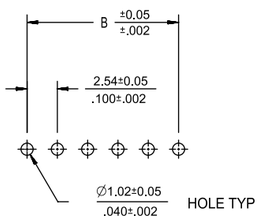

PCB LAYOUT: COMPONENT SIDE
TYPICAL PCB THICKNESS: 1.57/.062

2-*	BD6
1	BD8
SHT	REV

QUALITY SYMBOLS	
FA	= 0
FC	= 0
FP	= 0
▼	= 0
C	= 0
☒	= 0
■	= 0
C	= 0

THIS DRAWING CONTAINS INFORMATION THAT IS PROPRIETARY TO MOLEX ELECTRONIC TECHNOLOGIES, LLC AND SHOULD NOT BE USED WITHOUT WRITTEN PERMISSION

ADDED NEW P/N'S 2018/02/19
EC NO: 602687 2018/08/13
DRWN: SS06 CHK'D: ISHWARG 2018/08/13
APPR: ISHWARG

BD8 REV

GENERAL TOLERANCES (UNLESS SPECIFIED)

	MM	INCH
4 PLACES	±	±
3 PLACES	±	± 0.01
2 PLACES	± 0.25	± 0.015
1 PLACES	± 0.38	±
0 PLACES	±	±
ANGULAR TOL ± 0.5		

DRAFT WHERE APPLICABLE MUST REMAIN WITHIN DIMENSIONS

DIMENSION UNITS: MM/IN
SCALE: 4:1
DRWN BY: SAMIEC DATE: 2004/03/31
CHK'D BY: SAMIEC DATE: 2004/03/31
APPR BY: FSMITH DATE: 2010/12/03
DRAWING SIZE: B
THIRD ANGLE PROJECTION

molex®

KK 100 HEADER ASSEMBLY
FRICTION LOCK SOLID BODY

PRODUCT CUSTOMER DRAWING

SERIES	MATERIAL NUMBER	CUSTOMER
6373	SEE CHART	GENERAL MARKET

DOCUMENT NUMBER	DOC TYPE	DOC PART	SHEET NUMBER
SD-6373-001	PSD	000	1 OF *

RELEASE STATUS		RELEASE DATE	

FORMAT: Eng-lega-master-4t-prod-B
REVISION: C
DATE: 2016/04/04

GROUP:	A-6373-NA222-*		
PIN NUMBER:	42663-0306 OR 2766-1(222)		
PIN LENGTH: L	.560 / (14.22)		
MATING: M	.295 / (7.49)	DIM. G	N/A
PC TAIL: P	.140 / (3.56)	DIM T	OVERALL
PACKAGING:	PK-6373-001 BULK		

CKT	MATERIAL NUMBER	ENG NUMBER	CKT	MATERIAL NUMBER	ENG NUMBER	VOID CKT	CKT	MATERIAL NUMBER	ENG NUMBER	VOID CKT	CKT	MATERIAL NUMBER	ENG NUMBER	VOID CKT
2	22-23-2021	A-6373-02A222	9	22-04-5094	A-6373-09A222-4	4	11	22-04-5117	A-6373-11A222-7	7	07	22-04-5076	A-6373-07A222-2	2
3	22-23-2031	A-6373-03A222	9	22-04-5096	A-6373-09A222-6	6	06	22-04-5063	A-6373-06A222-3	3	07	22-04-5077	A-6373-07A222-6	6
4	22-23-2041	A-6373-04A222	11	22-04-5114	A-6373-11A222-4	4	10	22-04-5101	A-6373-10A222-1	1	06	22-04-5069	A-6373-06A222-54	4, 5
5	22-23-2051	A-6373-05A222	11	22-04-5118	A-6373-11A222-8	8	10	22-04-5102	A-6373-10A222-2	2	25	22-04-5252	A-6373-25A222-2	2
6	22-23-2061	A-6373-06A222	08	22-04-5083	A-6373-08A222-3	3	10	22-04-5103	A-6373-10A222-3	3	08	22-04-5086	A-6373-08A222-6	6
7	22-23-2071	A-6373-07A222	08	22-04-5082	A-6373-08A222-2	2	15	22-04-5154	A-6373-15A222-14	14	08	22-04-5087	A-6373-08A222-52	2,3,5,6,7
8	22-23-2081	A-6373-08A222	10	22-04-5106	A-6373-10A222-6	6	05	22-04-5052	A-6373-05A222-2	2	10	22-04-5105	A-6373-10A222-5	5
9	22-23-2091	A-6373-09A222	04	22-04-5043	A-6373-04A222-3	3	08	22-04-5084	A-6373-08A222-4	4	05	22-04-5057	A-6373-05A222-52	2, 4
10	22-23-2101	A-6373-10A222	08	22-04-5081	A-6373-08A222-51	2,4,6	06	22-04-5064	A-6373-06A222-4	4	19	22-04-5198	A-6373-19A222-8	8
11	22-23-2111	A-6373-11A222	09	22-04-5093	A-6373-09A222-3	3	03	22-04-5031	A-6373-03A222-1	1	11	22-04-5119	A-6373-11A222-51	2,4,6,8,10
12	22-23-2121	A-6373-12A222	08	22-04-5085	A-6373-08A222-5	5	05	22-04-5053	A-6373-05A222-3	3	12	22-04-5129	A-6373-12A222-11	11
13	22-23-2131	A-6373-13A222	06	22-04-5065	A-6373-06A222-5	5	11	22-04-5116	A-6373-11A222-6	6	08	22-04-5088	A-6373-08A222-53	4, 6
14	22-23-2141	A-6373-14A222	07	22-04-5072	A-6373-07A222-52	2,4,6	07	22-04-5074	A-6373-07A222-4	4	04	22-04-5044	A-6373-04A222-4	4
15	22-23-2151	A-6373-15A222	06	22-04-5062	A-6373-06A222-2	2	10	22-04-5079	A-6373-10A222-52	2,3,5,6,8,9	27	22-04-5277	A-6373-27A222-51	3,7,9,11,14, 16, 21, 23
16	22-23-2161	A-6373-16A222	07	22-04-5071	A-6373-07A222-51	2,3,5,6	04	22-04-5049	A-6373-04A222-51	2,3				
17	22-23-2171	A-6373-17A222	10	22-04-5100	A-6373-10A222-10	10	04	22-04-5048	A-6373-04A222-52	2,4	11	22-04-5115	A-6373-11A222-52	5, 6
18	22-23-2181	A-6373-18A222	10	22-04-5109	A-6373-10A222-9	9	04	22-04-5041	A-6373-04A222-1	1	24	22-23-3245	A-6373-24A222-23	23
19	22-23-2191	A-6373-19A222	10	22-04-5108	A-6373-10A222-8	8	03	22-04-5032	A-6373-03A222-2	2	11	22-23-3115	A-6373-11A222-10	10
20	22-23-2201	A-6373-20A222	05	22-04-5054	A-6373-05A222-4	4	13	22-04-5139	A-6373-13A222-9	9	15	22-23-3155	A-6373-15A222-15	15
21	22-23-2211	A-6373-21A222	03	22-04-5033	A-6373-03A222-3	3	12	22-04-5126	A-6373-12A222-6	6	08	22-04-5089	A-6373-08A222-54	2, 5
22	22-23-2221	A-6373-22A222	07	22-04-5075	A-6373-07A222-5	5	13	22-04-5131	A-6373-13A222-51	2,3,5,6,8, 9,11,12	06	22-23-2069	A-6373-06A222-55	2,3,4,5
23	22-23-2231	A-6373-23A222	07	22-04-5073	A-6373-07A222-3	3	06	22-04-5066	A-6373-06A222-52	3,5	07	22-23-2079	A-6373-07A222-53	2,3,4,5,6
24	22-23-2241	A-6373-24A222	14	22-04-5149	A-6373-14A222-9	9	05	22-04-5056	A-6373-05A222-51	1,3,5	13	22-23-1137	A-6373-13A222-53	3,6,10,12
25	22-23-2251	A-6373-25A222	15	22-04-5152	A-6373-15A222-2	2	06	22-04-5067	A-6373-06A222-53	1, 5	10	22-23-1107	A-6373-10A222-53	4,7
26	22-23-2261	A-6373-26A222	11	50-29-1594	A-6373-11A222-53	2,3,4,5,7, 8,9,10	06	22-04-5068	A-6373-06A222-6	6	18	22-23-1187	A-6373-18A222-5	5
27	22-23-2271	A-6373-27A222					02	22-04-5021	A-6373-02A222-1	1	18	22-23-1188	A-6373-18A222-7	7
28	22-23-2281	A-6373-28A222	13	22-04-5132	A-6373-13A222-52	8, 9	04	22-04-5042	A-6373-04A222-2	2	12	50-29-0096	A-6373-12A222-8	8

REV:	ECR/ECN INFORMATION:	TITLE:	SHEET No.
BD6	EC No.: **602687** DATE: **08/10/2018**	**KK 100 HEADER ASSEMBLY FRICTION LOCK SOLID BODY**	**- 2 -**

DOCUMENT NUMBER:	CREATED / REVISED BY:	CHECKED BY:	APPROVED BY:
SD - 6373 - 001	**SS06**	**SS06**	**ISHWARG**

GROUP:	A-6373-NC197-*		
PIN NUMBER:	42663-0242		
PIN LENGTH: L	.530 / (13.46)		
MATING: M	.260 / (6.60)	DIM. G	N/A
PC TAIL: P	.145 / (3.68)	DIM T	OVERALL
PACKAGING:	PK-6373-001 BULK		

CKTS	MATERIAL NUMBER	ENG NUMBER	CKTS	MATERIAL NUMBER	ENG NUMBER	VOID CKT
2	22-23-2023	A-6373-02C197				
3	22-23-2033	A-6373-03C197				
4	22-23-2043	A-6373-04C197				
5	22-23-2053	A-6373-05C197				
6	22-23-2063	A-6373-06C197				
7	22-23-2073	A-6373-07C197				
8	22-23-2083	A-6373-08C197				
9	22-23-2093	A-6373-09C197				
10	22-23-2103	A-6373-10C197				
11	22-23-2113	A-6373-11C197				
12	22-23-2123	A-6373-12C197				
13	22-23-2133	A-6373-13C197				
14	22-23-2143	A-6373-14C197				
15	22-23-2153	A-6373-15C197				
16	22-23-2163	A-6373-16C197				
17	22-23-2173	A-6373-17C197				
18	22-23-2183	A-6373-18C197				
19	22-23-2193	A-6373-19C197				
20	22-23-2203	A-6373-20C197				
21	22-23-2213	A-6373-21C197				
22	22-23-2223	A-6373-22C197				
23	22-23-2233	A-6373-23C197				
24	22-23-2243	A-6373-24C197				
25	22-23-2253	A-6373-25C197				
26	22-23-2263	A-6373-26C197				
27	22-23-2273	A-6373-27C197				
28	22-23-2283	A-6373-28C197				

GROUP:	A-6373-NV228-*		
PIN NUMBER:	42663-0243		
PIN LENGTH: L	.530 / (13.46)		
MATING: M	.295 / (7.49)	DIM. G	.140 / (3.56)
PC TAIL: P	.110 / (2.79)	DIM T	.135 / (3.43)
PACKAGING:	PK-6373-001 BULK		

CKTS	MATERIAL NUMBER	ENG NUMBER	CKTS	MATERIAL NUMBER	ENG NUMBER	VOID CKT
2	22-15-3029	A-6373-02V228				
3	22-15-3039	A-6373-03V228				
4	22-15-3049	A-6373-04V228				
5	22-15-3059	A-6373-05V228				
6	22-15-3069	A-6373-06V228				
7	22-15-3079	A-6373-07V228				
8	22-15-3089	A-6373-08V228				
9	22-15-3099	A-6373-09V228				
10	22-15-3109	A-6373-10V228				
11	22-15-3119	A-6373-11V228				
12	22-15-3129	A-6373-12V228				
13	22-15-3139	A-6373-13V228				
14	22-15-3149	A-6373-14V228				
15	22-15-3159	A-6373-15V228				
16	22-15-3169	A-6373-16V228				
17	22-15-3179	A-6373-17V228				
18	22-15-3189	A-6373-18V228				
19	22-15-3199	A-6373-19V228				
20	22-15-3209	A-6373-20V228				
21	22-15-3219	A-6373-21V228				
22	22-15-3229	A-6373-22V228				
23	22-15-3239	A-6373-23V228				
24	22-15-3249	A-6373-24V228				
25	22-15-3259	A-6373-25V228				
26	22-15-3269	A-6373-26V228				
27	22-15-3279	A-6373-27V228				
28	22-15-3289	A-6373-28V228				

REV:	ECR/ECN INFORMATION:	TITLE:	SHEET No.
BD6	EC No.: **602687** DATE: **08/10/2018**	**KK 100 HEADER ASSEMBLY FRICTION LOCK SOLID BODY**	**- 3 -**

DOCUMENT NUMBER:	CREATED / REVISED BY:	CHECKED BY:	APPROVED BY:
SD - 6373 - 001	**SS06**	**SS06**	**ISHWARG**

GROUP:	A-6373-NE197-*		
PIN NUMBER:	42663-0682		
PIN LENGTH: L	.750 / (19.05)		
MATING: M	.260 / (6.60)	DIM. G	N/A
PC TAIL: P	.365 / (9.27)	DIM T	OVERALL
PACKAGING:	PK-6373-001 BULK		

CKTS	MATERIAL NUMBER	ENG NUMBER	CKTS	MATERIAL NUMBER	ENG NUMBER	VOID CKT
2	22-23-2025	A-6373-02E197				
3		A-6373-03E197				
4		A-6373-04E197				
5	22-23-2055	A-6373-05E197				
6	22-23-2065	A-6373-06E197				
7		A-6373-07E197				
8		A-6373-08E197				
9		A-6373-09E197				
10	22-23-2105	A-6373-10E197				
11		A-6373-11E197				
12		A-6373-12E197				
13		A-6373-13E197				
14		A-6373-14E197				
15	22-23-2155	A-6373-15E197				
16		A-6373-16E197				
17		A-6373-17E197				
18		A-6373-18E197				
19		A-6373-19E197				
20		A-6373-20E197				
21		A-6373-21E197				
22		A-6373-22E197				
23		A-6373-23E197				
24		A-6373-24E197				
25		A-6373-25E197				
26		A-6373-26E197				
27		A-6373-27E197				
28		A-6373-28E197				

GROUP:	A-6373-NY241-*		
PIN NUMBER:	42663-0443		
PIN LENGTH: L	.630 / (16.00)		
MATING: M	.318 / (8.08)	DIM. G	.140 / (3.56)
PC TAIL: P	.187 / (4.75)	DIM T	.135 / (3.43)
PACKAGING:	PK-6373-001 BULK		

CKTS	MATERIAL NUMBER	ENG NUMBER	CKTS	MATERIAL NUMBER	ENG NUMBER	VOID CKT
2	22-11-2026	A-6373-02Y241				
3	22-11-2036	A-6373-03Y241				
4	22-11-2046	A-6373-04Y241				
5	22-11-2056	A-6373-05Y241				
6	22-11-2066	A-6373-06Y241				
7	22-11-2076	A-6373-07Y241				
8	22-11-2086	A-6373-08Y241				
9	22-11-2096	A-6373-09Y241				
10	22-11-2106	A-6373-10Y241				
11	22-11-2116	A-6373-11Y241				
12	22-11-2126	A-6373-12Y241				
13	22-11-2136	A-6373-13Y241				
14	22-11-2146	A-6373-14Y241				
15	22-11-2156	A-6373-15Y241				
16	22-11-2166	A-6373-16Y241				
17	22-11-2176	A-6373-17Y241				
18	22-11-2186	A-6373-18Y241				
19	22-11-2196	A-6373-19Y241				
20	22-11-2206	A-6373-20Y241				
21	22-11-2216	A-6373-21Y241				
22	22-11-2226	A-6373-22Y241				
23	22-11-2236	A-6373-23Y241				
24	22-11-2246	A-6373-24Y241				
25	22-11-2256	A-6373-25Y241				
26	22-11-2266	A-6373-26Y241				
27	22-11-2276	A-6373-27Y241				
28	22-11-2286	A-6373-28Y241				

REV:	ECR/ECN INFORMATION:	TITLE:	SHEET No.
BD6	EC No.: **602687** DATE: **08/10/2018**	**KK 100 HEADER ASSEMBLY FRICTION LOCK SOLID BODY**	**- 4 -**

DOCUMENT NUMBER:	CREATED / REVISED BY:	CHECKED BY:	APPROVED BY:
SD - 6373 - 001	**SS06**	**SS06**	**ISHWARG**

GROUP:	A-6373-NA241-*		
PIN NUMBER:	42663-0305		
PIN LENGTH: L	.560 / (14.22)		
MATING: M	.295 / (7.49)	DIM. G	.140 / (3.56)
PC TAIL: P	.140 / (3.56)	DIM T	.135 / (3.43)
PACKAGING:	PK-6373-001 BULK		

CKTS	MATERIAL NUMBER	ENG NUMBER	CKTS	MATERIAL NUMBER	ENG NUMBER	VOID CKT
2	22-11-2022	A-6373-02A241	04	22-04-6044	A-6373-04A241-2	2
3	22-11-2032	A-6373-03A241	04	22-11-2043	A-6373-04A241-3	3
4	22-11-2042	A-6373-04A241	03	22-11-2037	A-6373-03A241-2	2
5	22-11-2052	A-6373-05A241	24	22-11-2247	A-6373-24A241-5	5
6	22-11-2062	A-6373-06A241	24	22-11-2248	A-6373-24A241-17	17
7	22-11-2072	A-6373-07A241	08	22-11-2087	A-6373-08A241-5	5
8	22-11-2082	A-6373-08A241	06	22-04-6064	A-6373-06A241-5	5
9	22-11-2092	A-6373-09A241	06	22-04-6065	A-6373-06A241-4	4
10	22-11-2102	A-6373-10A241	07	22-04-6074	A-6373-07A241-1	1
11	22-11-2112	A-6373-11A241	12	22-04-6124	A-6373-12A241-11	11
12	22-11-2122	A-6373-12A241	20	22-04-6204	A-6373-20A241-19	19
13	22-11-2132	A-6373-13A241	10	22-04-6104	A-6373-10A241-2	2
14	22-11-2142	A-6373-14A241	08	22-04-6084	A-6373-08A241-6	6
15	22-11-2152	A-6373-15A241	09	22-04-6094	A-6373-09A241-4	4
16	22-11-2162	A-6373-16A241	24	22-04-6244	A-6373-24A241-23	23
17	22-11-2172	A-6373-17A241	05	22-04-6054	A-6373-05A241-4	4
18	22-11-2182	A-6373-18A241	11	26-01-3192	A-6373-11A241-5	5
19	22-11-2192	A-6373-19A241	10	26-01-3194	A-6373-10A241-3	3
20	22-11-2202	A-6373-20A241	07	46999-0649	A-6373-07A241-51	2,4,6
21	22-11-2212	A-6373-21A241	05	46999-0654	A-6373-05A241-2	2
22	22-11-2222	A-6373-22A241				
23	22-11-2232	A-6373-23A241				
24	22-11-2242	A-6373-24A241				
25	22-11-2252	A-6373-25A241				
26	22-11-2262	A-6373-26A241				
27	22-11-2272	A-6373-27A241				
28	22-11-2282	A-6373-28A241				

GROUP:	A-6373-NA222-* (continued)		
PIN NUMBER:	42663-0306 OR 2766-1(222)		
PIN LENGTH: L	.560 / (14.22)		
MATING: M	.295 / (7.49)	DIM. G	N/A
PC TAIL: P	.140 / (3.56)	DIM T	OVERALL
PACKAGING:	PK-6373-001 BULK		

CKTS	MATERIAL NUMBER	ENG NUMBER	CKTS	MATERIAL NUMBER	ENG NUMBER	VOID CKT
			13	50-29-1611	A-6373-13A222-54	2,3,4,6,7, 8,10,11,12
			16	22-23-1189	A-6373-16A222-2	2
			10	22-04-5107	A-6373-10A222-7	7
			16	22-23-2165	A-6373-16A222-15	15
			10	22-04-5110	A-6373-10A222-4	4
			09	50-29-1766	A-6373-09A222-8	8
			09	50-29-1769	A-6373-09A222-2	2
			14	46999-0607	A-6373-14A222-51	2,3,4,7,8,9, 11,12,13
			18	46999-0663	A-6373-18A222-12	12
			18	46999-0664	A-6373-18A222-14	14
			18	46999-0691	A-6373-18A222-9	9

REV:	ECR/ECN INFORMATION:	TITLE:	SHEET No.
BD6	EC No.: **602687** DATE: **08/10/2018**	**KK 100 HEADER ASSEMBLY FRICTION LOCK SOLID BODY**	**- 5 -**

DOCUMENT NUMBER:	CREATED / REVISED BY:	CHECKED BY:	APPROVED BY:
SD - 6373 - 001	**SS06**	**SS06**	**ISHWARG**

GROUP:	A-6373-NAB197-*		
PIN NUMBER:	42663-0582		
PIN LENGTH: L	.700 / (17.78)		
MATING: M	.286 / (7.26)	DIM. G	N/A
PC TAIL: P	.289 / (7.34)	DIM T	OVERALL
PACKAGING:	PK-6373-001 BULK		

CKTS	MATERIAL NUMBER	ENG NUMBER	CKTS	MATERIAL NUMBER	ENG NUMBER	VOID CKT
2		A-6373-02AB197				
3	50-29-0052	A-6373-03AB197				
4	50-29-0053	A-6373-04AB197				
5		A-6373-05AB197				
6		A-6373-06AB197				
7		A-6373-07AB197				
8	50-29-0057	A-6373-08AB197				
9		A-6373-09AB197				
10	50-29-0058	A-6373-10AB197				
11		A-6373-11AB197				
12		A-6373-12AB197				
13		A-6373-13AB197				
14		A-6373-14AB197				
15		A-6373-15AB197				
16		A-6373-16AB197				
17		A-6373-17AB197				
18		A-6373-18AB197				
19		A-6373-19AB197				
20		A-6373-20AB197				
21		A-6373-21AB197				
22		A-6373-22AB197				
23		A-6373-23AB197				
24		A-6373-24AB197				
25		A-6373-25AB197				
26		A-6373-26AB197				
27		A-6373-27AB197				
28		A-6373-28AB197				

GROUP:	A-6373-NA231-*		
PIN NUMBER:	42663-0307		
PIN LENGTH: L	.560 / (14.22)		
MATING: M	.295 / (7.49)	DIM. G	.140 / (3.56)
PC TAIL: P	.140 / (3.56)	DIM T	.135 / (3.43)
PACKAGING:	PK-6373-001 BULK		

CKTS	MATERIAL NUMBER	ENG NUMBER	CKTS	MATERIAL NUMBER	ENG NUMBER	VOID CKT
2	22-04-5022	A-6373-02A231				
3	46999-0800	A-6373-03A231				
4	46999-0801	A-6373-04A231				
5		A-6373-05A231				
6		A-6373-06A231				
7		A-6373-07A231				
8		A-6373-08A231				
9		A-6373-09A231				
10		A-6373-10A231				
11		A-6373-11A231				
12		A-6373-12A231				
13		A-6373-13A231				
14		A-6373-14A231				
15		A-6373-15A231				
16		A-6373-16A231				
17		A-6373-17A231				
18		A-6373-18A231				
19		A-6373-19A231				
20		A-6373-20A231				
21		A-6373-21A231				
22		A-6373-22A231				
23		A-6373-23A231				
24		A-6373-24A231				
25		A-6373-25A231				
26		A-6373-26A231				
27		A-6373-27A231				
28		A-6373-28A231				

REV:	ECR/ECN INFORMATION:	TITLE:	SHEET No.
BD6	EC No.: **602687** DATE: **08/10/2018**	**KK 100 HEADER ASSEMBLY FRICTION LOCK SOLID BODY**	**- 6 -**

DOCUMENT NUMBER:	CREATED / REVISED BY:	CHECKED BY:	APPROVED BY:
SD - 6373 - 001	**SS06**	**SS06**	**ISHWARG**

GROUP:	A-6373-NAH241-*		
PIN NUMBER:	42663-0305		
PIN LENGTH: L	.560 / (14.22)		
MATING: M	.260 / (6.60)	DIM. G	.140 / (3.56)
PC TAIL: P	.175 / (4.45)	DIM T	.135 / (3.43)
PACKAGING:	PK-6373-001 BULK		

CKTS	MATERIAL NUMBER	ENG NUMBER	CKTS	MATERIAL NUMBER	ENG NUMBER	VOID CKT
2	22-23-6024	A-6373-02AH241				
3	22-23-6034	A-6373-03AH241				
4	22-23-6044	A-6373-04AH241				
5	22-23-6054	A-6373-05AH241				
6	22-23-6064	A-6373-06AH241				
7	22-23-6074	A-6373-07AH241				
8	22-23-6084	A-6373-08AH241				
9	22-23-6094	A-6373-09AH241				
10	22-23-6104	A-6373-10AH241				
11	22-23-6114	A-6373-11AH241				
12	22-23-6124	A-6373-12AH241				
13	22-23-6134	A-6373-13AH241				
14	22-23-6144	A-6373-14AH241				
15	22-23-6154	A-6373-15AH241				
16	22-23-6164	A-6373-16AH241				
17	22-23-6174	A-6373-17AH241				
18	22-23-6184	A-6373-18AH241				
19	22-23-6194	A-6373-19AH241				
20	22-23-6204	A-6373-20AH241				
21	22-23-6214	A-6373-21AH241				
22	22-23-6224	A-6373-22AH241				
23	22-23-6234	A-6373-23AH241				
24	22-23-6244	A-6373-24AH241				
25	22-23-6254	A-6373-25AH241				
26	22-23-6264	A-6373-26AH241				
27	22-23-6274	A-6373-27AH241				
28	22-23-6284	A-6373-28AH241				

GROUP:	A-6373-NA228-*		
PIN NUMBER:	42663-0304		
PIN LENGTH: L	.560 / (14.22)		
MATING: M	.295 / (7.49)	DIM. G	.140 / (3.56)
PC TAIL: P	.140 / (3.56)	DIM T	.135 / (3.43)
PACKAGING:	PK-6373-001 BULK		

CKTS	MATERIAL NUMBER	ENG NUMBER	CKTS	MATERIAL NUMBER	ENG NUMBER	VOID CKT
2	22-11-2028	A-6373-02A228	09	22-11-2095	A-6373-09A228-3	3
3	22-11-2038	A-6373-03A228	09	22-11-2097	A-6373-09A228-5	5
4	22-11-2048	A-6373-04A228	05	22-11-2055	A-6373-05A228-3	3
5	22-11-2058	A-6373-05A228	11	22-11-2117	A-6373-11A228-5	5
6	22-11-2068	A-6373-06A228				
7	22-11-2078	A-6373-07A228				
8	22-11-2088	A-6373-08A228				
9	22-11-2098	A-6373-09A228				
10	22-11-2108	A-6373-10A228				
11	22-11-2118	A-6373-11A228				
12	22-11-2128	A-6373-12A228				
13	22-11-2138	A-6373-13A228				
14	22-11-2148	A-6373-14A228				
15		A-6373-15A228				
16		A-6373-16A228				
17	22-11-2178	A-6373-17A228				
18	46999-0605	A-6373-18A228				
19		A-6373-19A228				
20		A-6373-20A228				
21		A-6373-21A228				
22	22-11-2228	A-6373-22A228				
23		A-6373-23A228				
24		A-6373-24A228				
25		A-6373-25A228				
26		A-6373-26A228				
27		A-6373-27A228				
28		A-6373-28A228				

REV:	ECR/ECN INFORMATION:	TITLE:	SHEET No.
BD6	EC No.: **602687** DATE: **08/10/2018**	**KK 100 HEADER ASSEMBLY FRICTION LOCK SOLID BODY**	**- 7 -**

DOCUMENT NUMBER:	CREATED / REVISED BY:	CHECKED BY:	APPROVED BY:
SD - 6373 - 001	**SS06**	**SS06**	**ISHWARG**

GROUP:	A-6373-NAD197-*		
PIN NUMBER:	42663-0302		
PIN LENGTH: L	.560 / (14.22)		
MATING: M	.295 / (7.49)	DIM. G	N/A
PC TAIL: P	.140 / (3.56)	DIM T	OVERALL
PACKAGING:	PK-6373-001 BULK		

CKTS	MATERIAL NUMBER	ENG NUMBER	CKTS	MATERIAL NUMBER	ENG NUMBER	VOID CKT
2	22-23-2028	A-6373-02AD197				
3	22-23-2038	A-6373-03AD197				
4	22-23-2048	A-6373-04AD197				
5	22-23-2058	A-6373-05AD197				
6	22-23-2068	A-6373-06AD197				
7	22-23-2078	A-6373-07AD197				
8	22-23-2088	A-6373-08AD197				
9	22-23-2098	A-6373-09AD197				
10	22-23-2108	A-6373-10AD197				
11	22-23-2118	A-6373-11AD197				
12	22-23-2128	A-6373-12AD197				
13	22-23-2138	A-6373-13AD197				
14	22-23-2148	A-6373-14AD197				
15	22-23-2158	A-6373-15AD197				
16	22-23-2168	A-6373-16AD197				
17	22-23-2178	A-6373-17AD197				
18	22-23-2188	A-6373-18AD197				
19	22-23-2198	A-6373-19AD197				
20	22-23-2208	A-6373-20AD197				
21	22-23-2218	A-6373-21AD197				
22	22-23-2228	A-6373-22AD197				
23	22-23-2238	A-6373-23AD197				
24	22-23-2248	A-6373-24AD197				
25	22-23-2258	A-6373-25AD197				
26	22-23-2268	A-6373-26AD197				
27	22-23-2278	A-6373-27AD197				
28	22-23-2288	A-6373-28AD197				

GROUP:	
PIN NUMBER:	
PIN LENGTH: L	
MATING: M	
PC TAIL: P	
PACKAGING:	

CKTS	MATERIAL NUMBER	ENG NUMBER	CKTS	MATERIAL NUMBER	ENG NUMBER	VOID CKT
2						
3						
4						
5						
6						
7						
8						
9						
10						
11						
12						
13						
14						
15						
16						
17						
18						
19						
20						
21						
22						
23						
24						
25						
26						
27						
28						

REV:	ECR/ECN INFORMATION:	TITLE:	SHEET No.
BD6	EC No.: **602687** DATE: **08/10/2018**	**KK 100 HEADER ASSEMBLY FRICTION LOCK SOLID BODY**	**- 8 -**

DOCUMENT NUMBER:	CREATED / REVISED BY:	CHECKED BY:	APPROVED BY:
SD - 6373 - 001	**SS06**	**SS06**	**ISHWARG**

TEMPLATE FILENAME: PRODUCT_SPEC[SIZE_A](V.1).DOC

GROUP:	A-6373-NA197-*		
PIN NUMBER:	42663-0302		
PIN LENGTH L	.560 / (14.22)		
MATING: M	.295 / (7.49)	DIM. G	N/A
PC TAIL: P	.140 / (3.56)	DIM T	OVERALL
PACKAGING:	PK-6373-001 BULK		

CKTS	MATERIAL NUMBER	ENG NUMBER	CKTS	MATERIAL NUMBER	ENG NUMBER	VOID CKT
2	22-23-2027	A-6373-02A197	5	22-04-6053	A-6373-05A197-3	3
3	22-23-2037	A-6373-03A197				
4	22-23-2047	A-6373-04A197				
5	22-23-2057	A-6373-05A197				
6	22-23-2067	A-6373-06A197				
7	22-23-2077	A-6373-07A197				
8	22-23-2087	A-6373-08A197				
9	22-23-2097	A-6373-09A197				
10	22-23-2107	A-6373-10A197				
11	22-23-2117	A-6373-11A197				
12	22-23-2127	A-6373-12A197				
13	22-23-2137	A-6373-13A197				
14	22-23-2147	A-6373-14A197				
15	22-23-2157	A-6373-15A197				
16	22-23-2167	A-6373-16A197				
17	22-23-2177	A-6373-17A197				
18	22-23-2187	A-6373-18A197				
19	22-23-2197	A-6373-19A197				
20	22-23-2207	A-6373-20A197				
21	22-23-2217	A-6373-21A197				
22	22-23-2227	A-6373-22A197				
23	22-23-2237	A-6373-23A197				
24	22-23-2247	A-6373-24A197				
25	22-23-2257	A-6373-25A197				
26	22-23-2267	A-6373-26A197				
27	22-23-2277	A-6373-27A197				
28	22-23-2287	A-6373-28A197				

GROUP:	A-6373-NA197A-*		
PIN NUMBER:	42663-0302		
PIN LENGTH: L	.560 / (14.22)		
MATING: M	.295 / (7.49)	DIM. G	N/A
PC TAIL: P	.140 / (3.56)	DIM T	OVERALL
PACKAGING:	PK-44743-001 TUBE PACK		

CKTS	MATERIAL NUMBER	ENG NUMBER	CKTS	MATERIAL NUMBER	ENG NUMBER	VOID CKT
2	22-23-6021	A-6373-02A197A	10	22-23-6106	A-6373-10A197A-2	2
3	22-23-6031	A-6373-03A197A				
4	22-23-6041	A-6373-04A197A				
5	22-23-6051	A-6373-05A197A				
6	22-23-6061	A-6373-06A197A				
7	22-23-6071	A-6373-07A197A				
8	22-23-6081	A-6373-08A197A				
9	22-23-6091	A-6373-09A197A				
10	22-23-6101	A-6373-10A197A				
11	22-23-6111	A-6373-11A197A				
12	22-23-6121	A-6373-12A197A				
13	22-23-6131	A-6373-13A197A				
14	22-23-6141	A-6373-14A197A				
15	22-23-6151	A-6373-15A197A				
16	22-23-6161	A-6373-16A197A				
17	22-23-6171	A-6373-17A197A				
18	22-23-6181	A-6373-18A197A				
19	22-23-6191	A-6373-19A197A				
20	22-23-6201	A-6373-20A197A				
21	22-23-6211	A-6373-21A197A				
22	22-23-6221	A-6373-22A197A				
23	22-23-6231	A-6373-23A197A				
24	22-23-6241	A-6373-24A197A				
25	22-23-6251	A-6373-25A197A				
26	22-23-6261	A-6373-26A197A				
27	22-23-6271	A-6373-27A197A				
28	22-23-6281	A-6373-28A197A				

REV:	ECR/ECN INFORMATION:	TITLE:	SHEET No.
BD6	EC No.: **602687** DATE: **08/10/2018**	**KK 100 HEADER ASSEMBLY FRICTION LOCK SOLID BODY**	**- 9 -**

DOCUMENT NUMBER:	CREATED / REVISED BY:	CHECKED BY:	APPROVED BY:
SD - 6373 - 001	**SS06**	**SS06**	**ISHWARG**

GROUP:		A-6373-NAF197-*				
PIN NUMBER:		42663-0182				
PIN LENGTH: L		.500 / (12.70)				
MATING : M		.260 / (6.60)	DIM. G		N/A	
PC TAIL: P		.115 / (2.92)	DIM T		OVERALL	
PACKAGING:		PK-6373-001 BULK				
CKTS	MATERIAL NUMBER	ENG NUMBER	CKTS	MATERIAL NUMBER	ENG NUMBER	VOID CKT
2	22-23-2020	A-6373-02AF197				
3	22-23-2030	A-6373-03AF197				
4	22-23-2040	A-6373-04AF197				
5	22-23-2050	A-6373-05AF197				
6	22-23-2060	A-6373-06AF197				
7	22-23-2070	A-6373-07AF197				
8	22-23-2080	A-6373-08AF197				
9	22-23-2090	A-6373-09AF197				
10	22-23-2100	A-6373-10AF197				
11	22-23-2110	A-6373-11AF197				
12	22-23-2120	A-6373-12AF197				
13	22-23-2130	A-6373-13AF197				
14	22-23-2140	A-6373-14AF197				
15	22-23-2150	A-6373-15AF197				
16	22-23-2160	A-6373-16AF197				
17	22-23-2170	A-6373-17AF197				
18	22-23-2180	A-6373-18AF197				
19	22-23-2190	A-6373-19AF197				
20	22-23-2200	A-6373-20AF197				
21	22-23-2210	A-6373-21AF197				
22	22-23-2220	A-6373-22AF197				
23	22-23-2230	A-6373-23AF197				
24	22-23-2240	A-6373-24AF197				
25	22-23-2250	A-6373-25AF197				
26	22-23-2260	A-6373-26AF197				
27	22-23-2270	A-6373-27AF197				
28	22-23-2280	A-6373-28AF197				

GROUP:		A-6373-NAG197-*				
PIN NUMBER:		42663-0182				
PIN LENGTH: L		.500 / (12.70)				
MATING: M		.301 / (7.65)	DIM. G		N/A	
PC TAIL: P		.074 / (1.88)	DIM T		OVERALL	
PACKAGING:		PK-6373-001 BULK				
CKTS	MATERIAL NUMBER	ENG NUMBER	CKTS	MATERIAL NUMBER	ENG NUMBER	VOID CKT
2	22-23-2022	A-6373-02AG197				
3	22-23-2032	A-6373-03AG197				
4	22-23-2042	A-6373-04AG197				
5	22-23-2052	A-6373-05AG197				
6	22-23-2062	A-6373-06AG197				
7	22-23-2072	A-6373-07AG197				
8	22-23-2082	A-6373-08AG197				
9	22-23-2092	A-6373-09AG197				
10	22-23-2102	A-6373-10AG197				
11	22-23-2112	A-6373-11AG197				
12	22-23-2122	A-6373-12AG197				
13	22-23-2132	A-6373-13AG197				
14	22-23-2142	A-6373-14AG197				
15	22-23-2152	A-6373-15AG197				
16	22-23-2162	A-6373-16AG197				
17	22-23-2172	A-6373-17AG197				
18	22-23-2182	A-6373-18AG197				
19	22-23-2192	A-6373-19AG197				
20	22-23-2202	A-6373-20AG197				
21	22-23-2212	A-6373-21AG197				
22	22-23-2222	A-6373-22AG197				
23	22-23-2232	A-6373-23AG197				
24	22-23-2242	A-6373-24AG197				
25	22-23-2252	A-6373-25AG197				
26	22-23-2262	A-6373-26AG197				
27	22-23-2272	A-6373-27AG197				
28	22-23-2282	A-6373-28AG197				

REV:	ECR/ECN INFORMATION:	TITLE:	SHEET No.
BD6	EC No.: **602687** DATE: **08/10/2018**	**KK 100 HEADER ASSEMBLY FRICTION LOCK SOLID BODY**	**- 10 -**

DOCUMENT NUMBER:	CREATED / REVISED BY:	CHECKED BY:	APPROVED BY:
SD - 6373 - 001	**SS06**	**SS06**	**ISHWARG**

GROUP:	A-6373-NAH197-*		
PIN NUMBER:	42663-0302		
PIN LENGTH: L	.560 / (14.22)		
MATING: M	.260 / (6.60)	DIM. G	N/A
PC TAIL: P	.175 / (4.45)	DIM T	OVERALL
PACKAGING:	PK-6373-001 BULK		

CKTS	MATERIAL NUMBER	ENG NUMBER	CKTS	MATERIAL NUMBER	ENG NUMBER	VOID CKT
2	22-23-3020	A-6373-02AH197				
3	22-23-3030	A-6373-03AH197				
4	22-23-3040	A-6373-04AH197				
5	22-23-3050	A-6373-05AH197				
6	22-23-3060	A-6373-06AH197				
7	22-23-3070	A-6373-07AH197				
8	22-23-3080	A-6373-08AH197				
9	22-23-3090	A-6373-09AH197				
10	22-23-3100	A-6373-10AH197				
11	22-23-3110	A-6373-11AH197				
12	22-23-3120	A-6373-12AH197				
13	22-23-3130	A-6373-13AH197				
14	22-23-3140	A-6373-14AH197				
15	22-23-3150	A-6373-15AH197				
16	22-23-3160	A-6373-16AH197				
17	22-23-3170	A-6373-17AH197				
18	22-23-3180	A-6373-18AH197				
19	22-23-3190	A-6373-19AH197				
20	22-23-3200	A-6373-20AH197				
21	22-23-3210	A-6373-21AH197				
22	22-23-3220	A-6373-22AH197				
23	22-23-3230	A-6373-23AH197				
24	22-23-3240	A-6373-24AH197				
25	22-23-3250	A-6373-25AH197				
26	22-23-3260	A-6373-26AH197				
27	22-23-3270	A-6373-27AH197				
28	22-23-3280	A-6373-28AH197				

GROUP:	A-6373-NAJ197-*		
PIN NUMBER:	42663-0342		
PIN LENGTH: L	.580 / (14.73)		
MATING: M	.300 / (7.62)	DIM. G	N/A
PC TAIL: P	.155 / (3.94)	DIM T	OVERALL
PACKAGING:	PK-6373-001 BULK		

CKTS	MATERIAL NUMBER	ENG NUMBER	CKTS	MATERIAL NUMBER	ENG NUMBER	VOID CKT
2	22-23-3023	A-6373-02AJ197	05	22-04-6052	A-6373-05AJ197-1	1
3	22-23-3033	A-6373-03AJ197	06	22-04-6062	A-6373-06AJ197-2	2
4	22-23-3043	A-6373-04AJ197				
5	22-23-3053	A-6373-05AJ197				
6	22-23-3063	A-6373-06AJ197				
7		A-6373-07AJ197				
8	22-23-3083	A-6373-08AJ197				
9	22-23-3093	A-6373-09AJ197				
10	22-23-3103	A-6373-10AJ197				
11		A-6373-11AJ197				
12		A-6373-12AJ197				
13		A-6373-13AJ197				
14		A-6373-14AJ197				
15	22-23-3153	A-6373-15AJ197				
16	22-23-3163	A-6373-16AJ197				
17		A-6373-17AJ197				
18		A-6373-18AJ197				
19		A-6373-19AJ197				
20	22-23-3203	A-6373-20AJ197				
21		A-6373-21AJ197				
22		A-6373-22AJ197				
23		A-6373-23AJ197				
24		A-6373-24AJ197				
25		A-6373-25AJ197				
26		A-6373-26AJ197				
27		A-6373-27AJ197				
28		A-6373-28AJ197				

REV:	ECR/ECN INFORMATION:	TITLE:	SHEET No.
BD6	EC No.: **602687** DATE: **08/10/2018**	**KK 100 HEADER ASSEMBLY FRICTION LOCK SOLID BODY**	**- 11 -**

DOCUMENT NUMBER:	CREATED / REVISED BY:	CHECKED BY:	APPROVED BY:
SD - 6373 - 001	**SS06**	**SS06**	**ISHWARG**

GROUP:	A-6373-NA241A-*		
PIN NUMBER:	42663-0305		
PIN LENGTH: L	.560 / (14.22)		
MATING: M	.295 / (7.49)	DIM. G	.140 / (3.56)
PC TAIL: P	.140 / (3.56)	DIM T	.135 / (3.43)
PACKAGING:	PK-44743-001 TUBE PACK		

CKTS	MATERIAL NUMBER	ENG NUMBER	CKTS	MATERIAL NUMBER	ENG NUMBER	VOID CKT
2						
3	22-23-1035	A-6373-03A241A				
4	22-23-1045	A-6373-04A241A				
5	22-23-1055	A-6373-05A241A				
6	22-23-1065	A-6373-06A241A				
7	22-23-1075	A-6373-07A241A				
8	22-23-1085	A-6373-08A241A				
9	22-23-1095	A-6373-09A241A				
10	22-23-1105	A-6373-10A241A				
11	22-23-1115	A-6373-11A241A				
12	22-23-1125	A-6373-12A241A				
13	22-23-1135	A-6373-13A241A				
14	22-23-1145	A-6373-14A241A				
15	22-23-1155	A-6373-15A241A				
16	22-23-1165	A-6373-16A241A				
17	22-23-1175	A-6373-17A241A				
18	22-23-1185	A-6373-18A241A				
19	22-23-1195	A-6373-19A241A				
20	22-23-1205	A-6373-20A241A				
21	22-23-1211	A-6373-21A241A				
22	22-23-1222	A-6373-22A241A				
23	22-23-1233	A-6373-23A241A				
24	22-23-1244	A-6373-24A241A				
25	22-23-1255	A-6373-25A241A				
26	22-23-1266	A-6373-26A241A				
27	22-23-1277	A-6373-27A241A				
28	22-23-1288	A-6373-28A241A				

GROUP:	A-6373-NAL197-*		
PIN NUMBER:	42663-1182		
PIN LENGTH: L	1.000 / (25.40)		
MATING: M	.295 / (7.49)	DIM. G	N/A
PC TAIL: P	.580 / (14.73)	DIM T	OVERALL
PACKAGING:	PK-6373-001 BULK		

CKTS	MATERIAL NUMBER	ENG NUMBER	CKTS	MATERIAL NUMBER	ENG NUMBER	VOID CKT
2			06	22-04-6066	A-6373-06AL197-2	2
3	22-23-6032	A-6373-03AL197	06	22-04-6067	A-6373-06AL197-3	3
4	22-23-6042	A-6373-04AL197				
5	22-23-6052	A-6373-05AL197				
6	22-23-6062	A-6373-06AL197				
7	22-23-6072	A-6373-07AL197				
8	22-23-6082	A-6373-08AL197				
9	22-23-6092	A-6373-09AL197				
10	22-23-6102	A-6373-10AL197				
11	22-23-6112	A-6373-11AL197				
12	22-23-6122	A-6373-12AL197				
13	22-23-6132	A-6373-13AL197				
14	22-23-6142	A-6373-14AL197				
15	22-23-6152	A-6373-15AL197				
16	22-23-6162	A-6373-16AL197				
17	22-23-6172	A-6373-17AL197				
18	22-23-6182	A-6373-18AL197				
19	22-23-6192	A-6373-19AL197				
20	22-23-6202	A-6373-20AL197				
21	22-23-6212	A-6373-21AL197				
22	22-23-6222	A-6373-22AL197				
23	22-23-6232	A-6373-23AL197				
24	22-23-6242	A-6373-24AL197				
25	22-23-6252	A-6373-25AL197				
26	22-23-6262	A-6373-26AL197				
27	22-23-6272	A-6373-27AL197				
28	22-23-6282	A-6373-28AL197				

REV:	ECR/ECN INFORMATION:	TITLE:	SHEET No.
BD6	EC No.: **602687** DATE: **08/10/2018**	**KK 100 HEADER ASSEMBLY FRICTION LOCK SOLID BODY**	**- 12 -**

DOCUMENT NUMBER:	CREATED / REVISED BY:	CHECKED BY:	APPROVED BY:
SD - 6373 - 001	**SS06**	**SS06**	**ISHWARG**

GROUP:		A-6373-NAM197-*				
PIN NUMBER:		42663-0222				
PIN LENGTH:	L	.520 / (13.21)				
MATING: M		.305 / (7.75)	DIM. G		N/A	
PC TAIL: P		.090 / (2.29)	DIM T		OVERALL	
PACKAGING:		PK-6373-001 BULK				
CKTS	MATERIAL NUMBER	ENG NUMBER	CKTS	MATERIAL NUMBER	ENG NUMBER	VOID CKT
2	22-23-6023	A-6373-02AM197				
3	22-23-6033	A-6373-03AM197				
4	22-23-6043	A-6373-04AM197				
5	22-23-6053	A-6373-05AM197				
6	22-23-6063	A-6373-06AM197				
7	22-23-6073	A-6373-07AM197				
8	22-23-6083	A-6373-08AM197				
9	22-23-6093	A-6373-09AM197				
10	22-23-6103	A-6373-10AM197				
11	22-23-6113	A-6373-11AM197				
12	22-23-6123	A-6373-12AM197				
13	22-23-6133	A-6373-13AM197				
14	22-23-6143	A-6373-14AM197				
15	22-23-6153	A-6373-15AM197				
16	22-23-6163	A-6373-16AM197				
17	22-23-6173	A-6373-17AM197				
18	22-23-6183	A-6373-18AM197				
19	22-23-6193	A-6373-19AM197				
20	22-23-6203	A-6373-20AM197				
21	22-23-6213	A-6373-21AM197				
22	22-23-6223	A-6373-22AM197				
23	22-23-6233	A-6373-23AM197				
24	22-23-6243	A-6373-24AM197				
25	22-23-6253	A-6373-25AM197				
26	22-23-6263	A-6373-26AM197				
27	22-23-6273	A-6373-27AM197				
28	22-23-6283	A-6373-28AM197				

GROUP:		A-6373-NAM241-*				
PIN NUMBER:		42663-0223				
PIN LENGTH:	L	.520 / (13.21)				
MATING: M		.305 / (7.75)	DIM. G		.140 / (3.56)	
PC TAIL: P		.090 / (2.29)	DIM T		.135 / (3.43)	
PACKAGING:		PK-6373-001 BULK				
CKTS	MATERIAL NUMBER	ENG NUMBER	CKTS	MATERIAL NUMBER	ENG NUMBER	VOID CKT
2	22-23-6025	A-6373-02AM241				
3	22-23-6035	A-6373-03AM241				
4	22-23-6045	A-6373-04AM241				
5	22-23-6055	A-6373-05AM241				
6	22-23-6065	A-6373-06AM241				
7	22-23-6075	A-6373-07AM241				
8	22-23-6085	A-6373-08AM241				
9	22-23-6095	A-6373-09AM241				
10	22-23-6105	A-6373-10AM241				
11	22-23-6115	A-6373-11AM241				
12	22-23-6125	A-6373-12AM241				
13	22-23-6135	A-6373-13AM241				
14	22-23-6145	A-6373-14AM241				
15	22-23-6155	A-6373-15AM241				
16	22-23-6165	A-6373-16AM241				
17	22-23-6175	A-6373-17AM241				
18	22-23-6185	A-6373-18AM241				
19	22-23-6195	A-6373-19AM241				
20	22-23-6205	A-6373-20AM241				
21	22-23-6215	A-6373-21AM241				
22	22-23-6225	A-6373-22AM241				
23	22-23-6235	A-6373-23AM241				
24	22-23-6245	A-6373-24AM241				
25	22-23-6255	A-6373-25AM241				
26	22-23-6265	A-6373-26AM241				
27	22-23-6275	A-6373-27AM241				
28	22-23-6285	A-6373-28AM241				

REV:	ECR/ECN INFORMATION:	TITLE:	SHEET No.
BD6	EC No.: **602687** DATE: **08/10/2018**	**KK 100 HEADER ASSEMBLY FRICTION LOCK SOLID BODY**	**- 13 -**

DOCUMENT NUMBER:	CREATED / REVISED BY:	CHECKED BY:	APPROVED BY:
SD - 6373 - 001	**SS06**	**SS06**	**ISHWARG**

GROUP:	A-6373-NAN241-*					
PIN NUMBER:	42663-0443					
PIN LENGTH: L	.630 / (16.00)					
MATING: M	.300 / (7.62)	DIM. G	.140 / (3.56)			
PC TAIL: P	.205 / (5.21)	DIM T	.135 / (3.43)			
PACKAGING:	PK-6373-001 BULK					
CKTS	MATERIAL NUMBER	ENG NUMBER	CKTS	MATERIAL NUMBER	ENG NUMBER	VOID CKT
2		A-6373-02AN241				
3		A-6373-03AN241				
4	22-23-6047	A-6373-04AN241				
5		A-6373-05AN241				
6		A-6373-06AN241				
7		A-6373-07AN241				
8		A-6373-08AN241				
9		A-6373-09AN241				
10		A-6373-10AN241				
11		A-6373-11AN241				
12		A-6373-12AN241				
13		A-6373-13AN241				
14		A-6373-14AN241				
15		A-6373-15AN241				
16		A-6373-16AN241				
17		A-6373-17AN241				
18		A-6373-18AN241				
19		A-6373-19AN241				
20		A-6373-20AN241				
21		A-6373-21AN241				
22		A-6373-22AN241				
23		A-6373-23AN241				
24		A-6373-24AN241				
25		A-6373-25AN241				
26		A-6373-26AN241				
27		A-6373-27AN241				
28		A-6373-28AN241				

GROUP:	A-6373-NAB241-*					
PIN NUMBER:	42663-0583					
PIN LENGTH: L	.700 / (17.78)					
MATING: M	.286 / (7.26)	DIM. G	.200 / (5.08)			
PC TAIL: P	.289 / (7.34)	DIM T	.135 / (3.43)			
PACKAGING:	PK-6373-001 BULK					
CKTS	MATERIAL NUMBER	ENG NUMBER	CKTS	MATERIAL NUMBER	ENG NUMBER	VOID CKT
2	50-29-1746	A-6373-02AB241				
3		A-6373-03AB241				
4		A-6373-04AB241				
5		A-6373-05AB241				
6		A-6373-06AB241				
7		A-6373-07AB241				
8	50-29-1741	A-6373-08AB241				
9		A-6373-09AB241				
10	50-29-1742	A-6373-10AB241				
11		A-6373-11AB241				
12		A-6373-12AB241				
13		A-6373-13AB241				
14		A-6373-14AB241				
15		A-6373-15AB241				
16		A-6373-16AB241				
17		A-6373-17AB241				
18		A-6373-18AB241				
19		A-6373-19AB241				
20		A-6373-20AB241				
21		A-6373-21AB241				
22		A-6373-22AB241				
23		A-6373-23AB241				
24		A-6373-24AB241				
25		A-6373-25AB241				
26		A-6373-26AB241				
27		A-6373-27AB241				
28		A-6373-28AB241				

REV:	ECR/ECN INFORMATION:	TITLE:	SHEET No.
BD6	EC No.: **602687** DATE: **08/10/2018**	**KK 100 HEADER ASSEMBLY FRICTION LOCK SOLID BODY**	**- 14 -**

DOCUMENT NUMBER:	CREATED / REVISED BY:	CHECKED BY:	APPROVED BY:
SD - 6373 - 001	**SS06**	**SS06**	**ISHWARG**

GROUP:	A-6373-NAN197-*		
PIN NUMBER:	42663-0442		
PIN LENGTH: L	.630 / (16.00)		
MATING: M	.300 / (7.62)	DIM. G	N/A
PC TAIL: P	.205 / (5.21)	DIM T	OVERALL
PACKAGING:	PK-6373-001 BULK		

CKTS	MATERIAL NUMBER	ENG NUMBER	CKTS	MATERIAL NUMBER	ENG NUMBER	VOID CKT
2			9	50-34-8527	A-6373-09AN197-7	7
3						
4	50-36-1696	A-6373-04AN197				
5						
6						
7						
8						
9						
10						
11						
12						
13						
14						
15						
16						
17						
18						
19						
20						
21						
22						
23						
24						
25						
26						
27						
28						

GROUP:	A-6373-NA154-*		
PIN NUMBER:	42663-0309		
PIN LENGTH: L	.560 / (14.22)		
MATING: M	.295 / (7.49)	DIM. G	N/A
PC TAIL: P	.140 / (3.56)	DIM T	OVERALL
PACKAGING:	PK-6373-001 BULK		

CKTS	MATERIAL NUMBER	ENG NUMBER	CKTS	MATERIAL NUMBER	ENG NUMBER	VOID CKT
2			9	26-01-3183	A-6373-09A154-7	7
3						
4						
5						
6						
7						
8						
9						
10						
11						
12						
13						
14						
15						
16						
17						
18						
19						
20						
21						
22						
23						
24						
25						
26						
27						
28						

REV:	ECR/ECN INFORMATION:	TITLE:	SHEET No.
BD6	EC No.: **602687** DATE: **08/10/2018**	**KK 100 HEADER ASSEMBLY FRICTION LOCK SOLID BODY**	**- 15 -**

DOCUMENT NUMBER:	CREATED / REVISED BY:	CHECKED BY:	APPROVED BY:
SD - 6373 - 001	**SS06**	**SS06**	**ISHWARG**

GROUP:	A-6373-NB222-*		
PIN NUMBER:	42663-0306 OR 2766-1(222)		
PIN LENGTH: L	.560 / (14.22)		
MATING: M	.295 / (7.49)	DIM. G	N/A
PC TAIL: P	.140 / (3.56)	DIM T	OVERALL
PACKAGING:	1718561000-PK		

CKTS	MATERIAL NUMBER	ENG NUMBER	CKTS	MATERIAL NUMBER	ENG NUMBER	VOID CKT
2						
3	22-23-1031	A-6373-03B222				
4						
5						
6						
7						
8						
9						
10						
11						
12						
13						
14						
15						
16						
17						
18						
19						
20						
21						
22						
23						
24						
25						
26						
27						
28						

REV:	ECR/ECN INFORMATION:	TITLE:	SHEET No.
BD6	EC No.: **602687** DATE: **08/10/2018**	**KK 100 HEADER ASSEMBLY FRICTION LOCK SOLID BODY**	**- 16 -**

DOCUMENT NUMBER:	CREATED / REVISED BY:	CHECKED BY:	APPROVED BY:
SD - 6373 - 001	**SS06**	**SS06**	**ISHWARG**

GROUP:	A-6373-NB241-*		
PIN NUMBER:	42663-0305		
PIN LENGTH: L	.560 / (14.22)		
MATING: M	.295 / (7.49)	DIM. G	.140 / (3.56)
PC TAIL: P	.140 / (3.56)	DIM T	.135 / (3.43)
PACKAGING:	1718561000-PK		

CKTS	MATERIAL NUMBER	ENG NUMBER	CKTS	MATERIAL NUMBER	ENG NUMBER	VOID CKT
2						
3						
4	22-11-3045	A-6373-04B241				
5	22-11-3055	A-6373-05B241				
6						
7						
8						
9						
10						
11						
12						
13						
14						
15						
16						
17						
18						
19						
20						
21						
22						
23						
24						
25						
26						
27						
28						

REV:	ECR/ECN INFORMATION:	TITLE:	SHEET No.
BD6	EC No.: **602687** DATE: **08/10/2018**	**KK 100 HEADER ASSEMBLY FRICTION LOCK SOLID BODY**	**- 17 -**

DOCUMENT NUMBER:	CREATED / REVISED BY:	CHECKED BY:	APPROVED BY:
SD - 6373 - 001	**SS06**	**SS06**	**ISHWARG**

Mouser Electronics

Authorized Distributor

Click to View Pricing, Inventory, Delivery & Lifecycle Information:

Molex:

50-29-1741 50-29-1742 50-29-1746