PRODUCT NO.	
10023290–025	OBSOLETE
10023290–025LF	

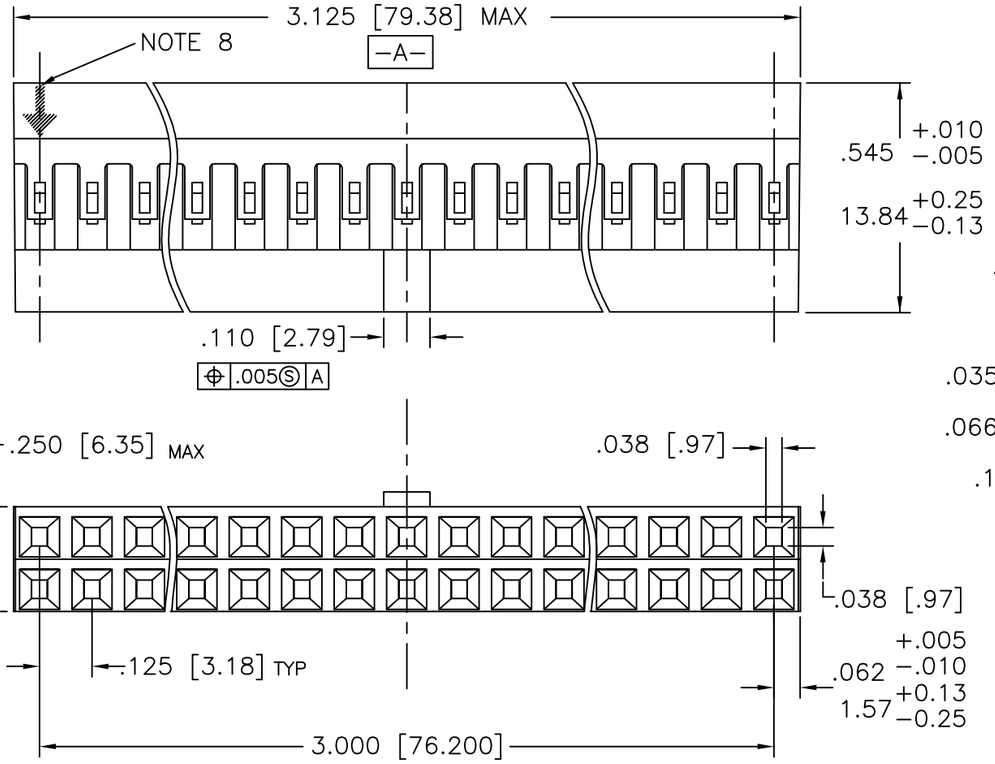

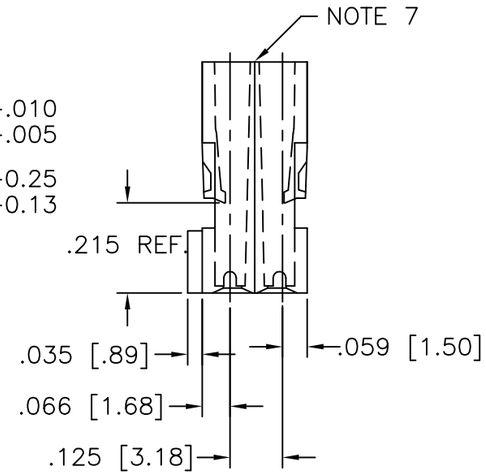

NOTES:

1. MOLDING MATERIAL–MODIFIED POLYPHENYLENE ETHER, COLOR: BLACK, MEETING UL–94V–0.
2. PIN LENGTH TO BE .210[5.33] MIN. RECOMMENDED PIN LENGTH IS .225±.015 [5.72 ±.38]
3. TO LATCH TERMINAL–PUSH AS SHOWN IN FIGURE #1, BE SURE THAT LATCH SNAPS DOWN.
4. TO REMOVE TERMINAL–PUSH TERMINAL FORWARD. LIFT LATCH WITH HANDTOOL AS SHOWN IN FIG.#2 & 3. DAMAGE TO LATCH CAN OCCUR IF LIFTED MORE THAN 25° ANGLE TO TOP OF HOUSING.
5. SEE MINI PV™ TERMINAL TA–75 FOR CORRECT CRIMP HEIGHT FOR EACH DIFFERENT WIRE SIZE. IF THIS SPECIFICATION IS NOT MET LATCHING WILL NOT BE SATISFACTORY. PRODUCT SPECIFICATION: BUS–12–067.
6. THIS HOUSING IS INTENDED FOR USE WITH FCI ELECTRONICS MINI PV™ TERMINAL AND FCI C.T.W. MALE PIN WITH 22–26 A.W.G. WIRE.
7. MOLDING IS PRIMARY MANUFACTURING METHOD, SOLVENT BONDING. IS OPTIONAL.
8. ARROW MARKED ON HOUSING INDICATES POSITION #1.
9. PRODUCT MEETS EUROPEAN UNION DIRECTIVES AND OTHER COUNTRY REGULATIONS AS DESCRIBED IN GS–22–008.
10. THIS PRODUCT IS NOT INTENDED TO BE EXPOSED TO MANUFACTURING SOLDER PROCESSES.

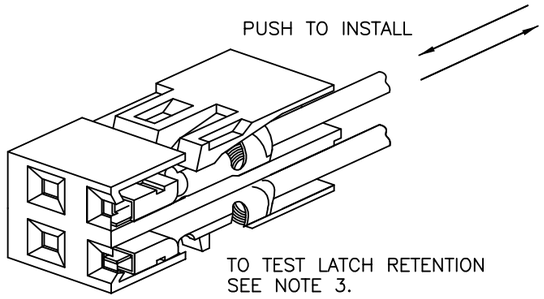

FIG 1

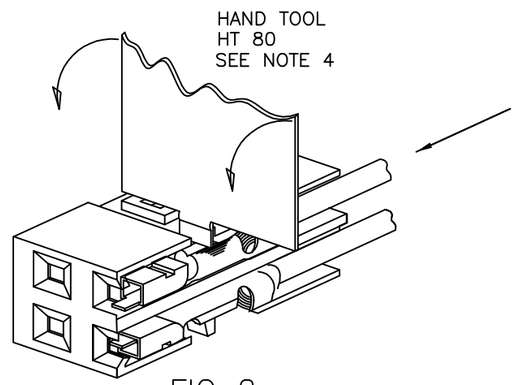

FIG 2

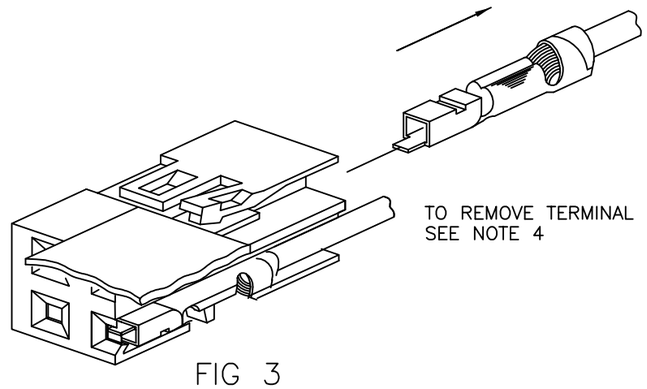

FIG 3

mat'l. code				surface	tolerance		projection	product family
SEE NOTE 1				✓				PV HOUSINGS
ltr	ecn no	dr	date	tolerances unless otherwise specified				title
A	V03–0376	HTB	2003-04-02	angles	linear	.XX±.01/.X±.3	INCH/MM	MINI LATCH HOUSING W/KEY
B	V03–0453	HTB	2003-04-22			.XXX±.005/.XX±.13		.125 [3.18] X .125 [3.18]
C	V03–1363	PJ	2004-02-21	0°±2°		.XXXX±.0020/.XXX±.05	scale 2:1	
D	V05–0718	TAB	2005-07-29	dr	L. POTTEIGER	2003-03-20		dwg no 10023290 — sheet 1 of 1 — size A3
E	V06–0407	HTB	2006-04-26	engr	H. SUNDY	2003-03-20		
F	V07–0534	HTB	2007-08-22	chr	H. SUNDY	2003-03-20		
				appd	H. SUNDY	2003-03-20		type Product Customer Drawing
sheet index	revision	F						
	sheet	1						

FCIconnect.com
Copyright FCI