DRAWING MADE IN THIRD ANGLE PROJECTION

/home/us018246

PART NUMBER	REV	FIRST USED
1385829-1	A	122500-1
1385829-2	A	565435-5
1385829-3	A	354500-1

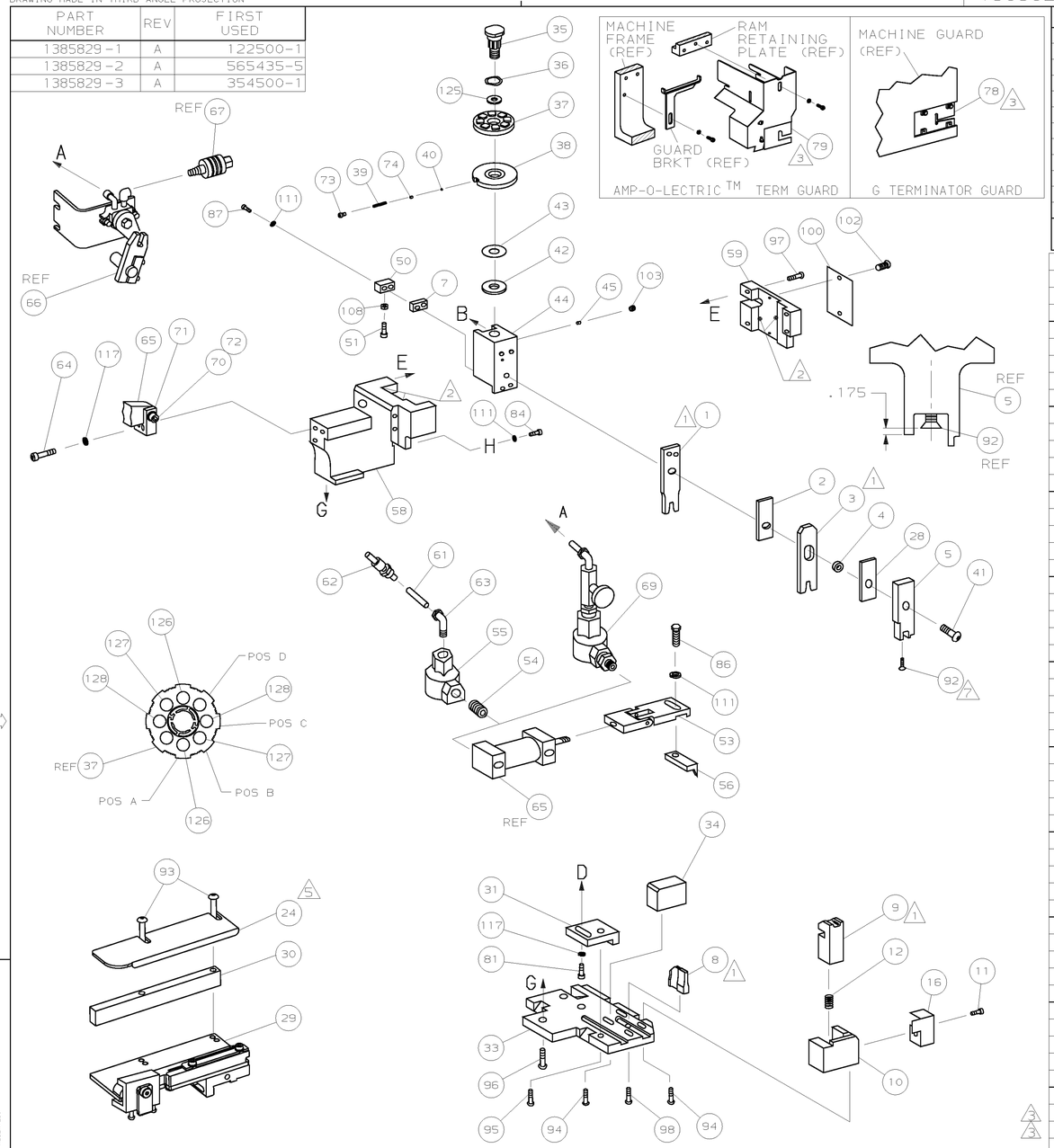

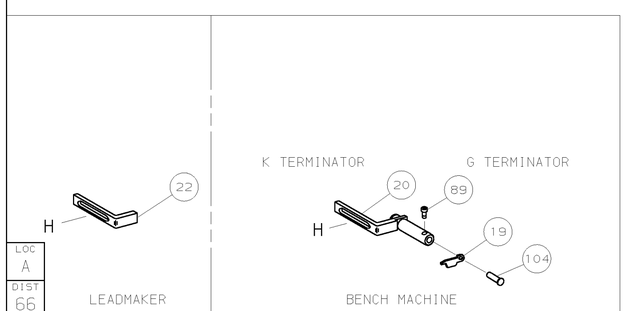

TERMINAL NAME: 6.3MM YESC SEALED FEMALE △6

AMP TERM PN	MFR TERM PN
1572594	7116-4140-02
1572595	7114-4140-02

YAZAKI TERMINAL CUSTOMER CRIMP SPECS

PAD LTR	CRIMP HEIGHT	WIRE SIZE
A	.053 ±.002 [1.35 ±0.05mm]	16
B	.051 ±.002 [1.30 ±0.05mm]	18
C	.049 ±.002 [1.25 ±0.05mm]	20
D	NOT	USED

AMP SEAL PN	MFR SEAL PN
1572596	7158-3081-50

CRIMP	SIZE	TYPE	RANGE
WIRE	.100 [2.54mm]	F	20-16
INSUL	.174 [4.41mm]	O	.055-.083

WIRE STRIP LENGTH	TERM APPL SPEC	FEED △8	APPL INSTRUCTION	SET UP GAGE	LAYOUT
.240-.257	NONE		408-8040	458637-1	L3044

-1	LEADMAKER	AIRFEED
-2	BENCH MODEL K	AIRFEED
-3	BENCH MODEL G	AIRFEED

-3	-2	-1	U/M	DWG SIZE	PART NO	DESCRIPTION	ITEM NO
							129
2	2	2	-	C	4-354779-2	PIN, WIRE DISC (.3200)C	128
2	2	2	-	C	3-354779-8	PIN, WIRE DISC (.3180)B	127
2	2	2	-	C	3-354779-6	PIN, WIRE DISC (.3170)A	126
1	1	1	-	A	986950-1	WASHER, FLAT PRECISION	125
1	1	1	-	A	217238-1	GENERAL INSTRUCTION PACKAGE	124
1	1	1	-	-	4088040	SF APPL INST 408-8040	123
							122
							121
							120
							119
							118
3	3	3	-	A	21024-5	WASHER, LOCK(#10)ADJ BLOCK	117
							116
							115
							114
							113
							112
4	4	4	-	A	21024-4	WASHER,LOCK(#8)STRIPPER	111
							110
							109
1	1	1	-	A	21018-5	NUT,HEX(NO.6)HOLDDOWN	108
							107
							106
							105
1	1	-	-	A	992031-1	PIN, CLEVIS	104
1	1	1	-	A	21009-2	SCR,SKT SET(1/4-20x.25 LW)RAM	103
2	2	2	-	A	21017-2	SCR,DRIVE(#2x.19)ID PLATE	102
							101
1	1	1	-	B	461264-1	PLATE, IDENTIFICATION	100
							99
1	1	1	-	A	22733-8	SCR,BHC(8-32x.38 LW)ANVIL	98
4	4	4	-	A	2-21002-9	SCR,BHC(10-32x.75)CAP	97
3	3	3	-	A	2-22733-8	SCR,BHC(1/4-20x.62)HSG	96
1	1	1	-	A	2-21002-7	SCR,BHC(10-32x.50)SG ADJ BLK	95
4	4	4	-	A	2-21002-2	SCR,BHC(8-32x.50)TERM H DWN	94
2	2	2	-	A	2-21002-4	SCR,BHC(8-32x.75)R STP GDE	93
1	1	1	-	A	1-21003-9	SCR,FHC(6-32x.38)DEP	92
							91
							90
1	1	-	-	A	7-21000-9	SCR,SHC(4-40x.19)STRIPPER	89
							88
2	2	2	-	A	2-21000-7	SCR,SHC(8-32x.50)DEP-HOLD	87
1	1	1	-	A	2-22603-1	SCR,HEX HD(8-32x.38)FEED FINGER	86
							85
1	1	1	-	A	2-21000-7	SCR,SHC(8-32x.50)STRIPPER	84
							83
							82
1	1	1	-	A	3-21000-4	SCR,SHC(10-32x.38)SG ADJ BL	81
							80
△3 -	1	-	-	B	462992-7	GUARD ASSY	79
△3 REF	-	-	-	B	679532-1	INSERT, GUARD	78
							77
							76
							75
1	1	1	-	A	690603-1	SPRING, ASSIST	74
1	1	1	-	A	23030-1	SCR,SHC(6-32x.25 SL)INS DISC	73
1	1	1	-	A	3-21001-5	SCR,SHC(3/8-16X1.00)AIR FEED	72
1	1	1	-	B	459610-1	MOUNT, FEED BRACKET	71

QTY REQD PER ASSY — PARTS LIST

-3	-2	-1	U/M	DWG SIZE	PART NO	DESCRIPTION	ITEM NO
1	1	1	-	A	21024-8	WASHER, LOCK 3/8	70
△4 -	1	-	-	C	692655-5	AIR FEED VALVE ASSY	69
							68
-	REF	-	-	A	24042-2	VALVE, SHUT OFF	67
△4 -	REF	-	-	C	692655-6	AIR FEED VALVE ASSY	66
△4 1	1	1	-	B	461065-1	AIR FEED ASSY (1 INCH)	65
2	2	2	-	A	3-21000-9	SCR,SHC(10-32x1.00)AIR ASSY	64
1	-	1	-	A	980285-2	ELBOW, SWIVEL 1/8 NPT - 1/4 T	63
1	-	1	-	A	23238-1	QUICK DISCONNECT	62
21.00	-	21.00	IN	A	27319-4	TUBING, POLY-FLO Ø.25	61
							60
1	1	1	-	C	454220-1	CAP, RAM	59
1	1	1	-	D	454485-1	HOUSING	58
							57
1	1	1	-	B	2-694433-6	PAWL, FEED	56
1	-	1	-	A	22374-7	VALVE, QUICK EXHAUST	55
1	-	1	-	A	22304-1	NIPPLE, HEX	54
△4 1	1	1	-	B	461062-1	FEED FINGER ASSY	53
							52
1	1	1	-	A	811242-2	BUMPER, HOLDDOWN	51
1	1	1	-	A	690753-1	SPACER, TONKER	50
							49
							48
							47
							46
1	1	1	-	A	690191-1	PLUG, NYLON	45
1	1	1	-	C	819307-9	RAM	44
1	1	1	-	A	690125-1	WASHER, LAMINATED	43
1	1	1	-	A	690124-1	WASHER, RAM	42
1	1	1	-	A	7-21002-9	BOLT, CRIMPER(5/16x1.00)	41
1	1	1	-	A	23241-6	BALL, STEEL	40
1	1	1	-	A	690170-1	SPRING, COMPRESSION	39
1	1	1	-	C	1-690142-0	DISC, INSULATION	38
1	1	1	-	D	354777-1	DISC, WIRE	37
1	1	1	-	A	22480-5	WASHER, SPRING	36
1	1	1	-	B	690212-1	POST, RAM	35
1	1	1	-	B	690786-1	SUPPORT, TERMINAL	34
1	1	1	-	D	318055-4	PLATE, BASE	33
							32
1	1	1	-	B	455689-1	BLOCK, ADJ.STRIP GUIDE	31
1	1	1	-	B	1320908-2	SPACER, STRIP GUIDE	30
1	1	1	-	C	1633091-7	STRIP GUIDE ASSEMBLY	29
1	1	1	-	C	455888-8	SPACER, FRONT SHEAR DEP	28
							27
							26
							25
△5 1	1	1	-	D	1320928-3	GUIDE, STRIP (REAR)	24
							23
-	-	1	-	B	690472-2	STRIPPER	22
							21
1	1	-	-	A	679218-1	STRIPPER WIRE STOP ASSY	20
1	1	-	-	B	458949-1	STRIPPER	19
							18
							17
1	1	1	-	B	318563-1	GUARD, CHIP, FRONT	16
							15
							14
							13
1	1	1	-	A	4-22280-8	SPRING, SHEAR	12
1	1	1	-	B	1-21000-9	SCR,SHC(8-32x.38)SHEAR STOP	11
1	1	1	-	C	2-690459-2	HOLDER, SHEAR (FRONT)	10
△1 1	1	1	-	C	318059-4	SHEAR, FLOAT (FRONT)	9
△1 1	1	1	-	C	3-662188-9	ANVIL	8
1	1	1	-	C	4-240641-2	SPACER, DEPRESSOR (REAR)	7
							6
1	1	1	-	C	122399-4	DEPRESSOR, SHEAR (FRONT)	5
1	1	1	-	B	238011-2	SPACER, BLOCK CRIMPER	4
△1 1	1	1	-	C	1-318712-0	CRIMPER, INSULATION	3
1	1	1	-	C	2-455888-7	SPACER, CRIMPER	2
△1 1	1	1	-	C	2-456407-0	CRIMPER, WIRE	1

QTY REQD PER ASSY — PARTS LIST

REVISION OF EACH ASSY NO (WHEN BLANK, USE DWG REVISION)

△1 RECOMMENDED SPARE PARTS.
△2 GREASE LIGHTLY.
△3 GUARD MUST BE IN PLACE WHEN OPERATING APPLICATOR IN A BENCH MACHINE.
△4 SEE DRAWING FOR COMPONENTS
△5 REAR STRIP GUIDE TO GUIDE ON INSULATION BARREL.
△6 THIS APPLICATOR APPLIES TERMINAL WITH A SEAL.
△7 APPLY TORQ-SEAL IN ALLEN SOCKET TO FILL HOLE AFTER FLAT HD HAS BEEN ADJUSTED TO CORRECT HEIGHT AT QUALIFICATION. APPLY PN 1-23419-5 LOC-TITE TO THREADS.
△8 ADJUST FEED BETWEEN PIN AND SOCKET.

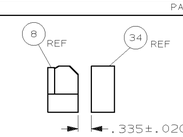

ITEM 34 LOCATION

P	F	LTR	REVISION RECORD	APP	DATE
		A	REVISED	BH	OCT04

DIMENSIONS IN INCHES. DO NOT SCALE PRINT. TOLERANCES UNLESS OTHERWISE SPECIFIED: 2 PLC DEC ±.25 3 PLC DEC ±- 4 PLC DEC ±- ANGLES ± - SURF TEXTURE, √ REMOVE BURRS, BREAK SHARP EDGES R.015 MAX

MATL – | HT TR – | FIN –

DR B.HIGMAN 27SEP04 | APP T.ELBIN 27SEP04 | CHK B.HIGMAN 27SEP04 | REL – –

AMP — Tyco Electronics, Harrisburg, PA 17105-3608

NAME SIDE FEED HDM APPLICATOR | MACHINE REF MINI APPL

SCALE – | D | DWG NO 1385829 | SHEET 1 OF 1 | REV A

CAGE CODE 00779 — CUSTOMER AND ASSEMBLY DRAWING — RESTRICTED TO –

THIS DRAWING IS A CONTROLLED DOCUMENT.
THIS DRAWING IS UNPUBLISHED. © COPYRIGHT 20 BY AMP INCORPORATED. ALL RIGHTS RESERVED. RELEASED FOR PUBLICATION .20

LOC A | DIST 66

Mouser Electronics

Authorized Distributor

Click to View Pricing, Inventory, Delivery & Lifecycle Information:

TE Connectivity:

1385829-2