THIS DRAWING IS UNPUBLISHED. RELEASED FOR PUBLICATION 20
© COPYRIGHT 20 BY TE ALL RIGHTS RESERVED.

PART NUMBER	REV	FIRST USED	POWER UNIT	FEED TYPE	DESCRIPTION
1855476-1	B	122500-1	LEADMAKER	AIR FEED	CUTS CARRIER
1855476-2	B	565435-5	BENCH MODEL K	AIR FEED	CUTS CARRIER
1855476-3	B	354500-1	BENCH MODEL G	AIR FEED	CUTS CARRIER
1855476-6	B	122500-1	LEADMAKER	AIR FEED	CONTINUOUS CARRIER
7-1855476-7	A	-	-	-	SPARE PARTS

1. RECOMMENDED SPARE PARTS
2. GREASE LIGHTLY
3. GUARD MUST BE IN PLACE WHEN OPERATING APPLICATOR IN A BENCH MACHINE
4. THE INSULATION RANGE LISTED IS FOR THE TERMINAL. THE INSULATION RANGE FOR THE SEAL IS Ø1.4-2.3mm.
5. ADJUST FEED TO SELECTED TERMINAL

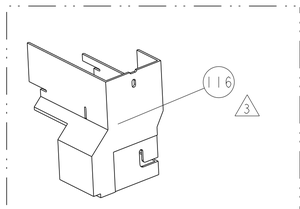

AMP-O-LECTRIC TERM GUARD

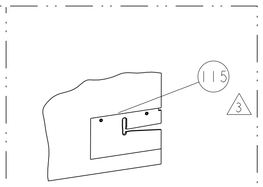

G TERMINATOR GUARD

TERMINAL NAME: 6.3mm YESC SEALED TERMINAL

TE PN	YAZAKI	FEED	YAZAKI TERMINAL - YAZAKI CRIMP SPECS		
5 1572594	7116-4140-02	22.0			
5 1572595	7114-4140-02	17.7	CRIMP HEIGHT	WIRE SIZE	REF SETTING
-	-		1.50mm+.05/-.05[.059+.002/-.002]	1mm2	B6
-	-		1.40mm+.05/-.05[.055+.002/-.002]	0.75mm2	C8
-	-		1.30mm+.05/-.05[.051+.002/-.002]	0.5mm2	D8
-	-			-	-
-	-	CRIMP	SIZE	TYPE	RANGE
SEAL PN	-				
1572596	7158-3081-50	WIRE	2.54mm [.100]	F	0.5-1mm2
-	-	INSUL	3.00mm [.118]	O	Ø4.00 MAX 4
WIRE STRIP LENGTH 5.00-5.50	TERM APPL SPEC NONE		APPLICATOR INSTRUCTIONS 408-8040		SET UP GAGE 458637-1

LOC	DIST
A	66

REVISIONS

P	LTR	DESCRIPTION	DATE	DWN	APVD
	A	RELEASED	06APR2009	RK	TE
	B	ECR-11-014437	12JUL2011	MY	GB

* WARNING
ON INSTALLATION, SET WIRE DISC TO LARGEST WIRE SIZE SETTING. USE OF SETTINGS BELOW MIN. REQUIRED CRIMP HEIGHT SETTING WILL CAUSE DAMAGE TO CRIMP TOOLING.

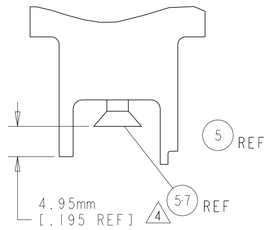

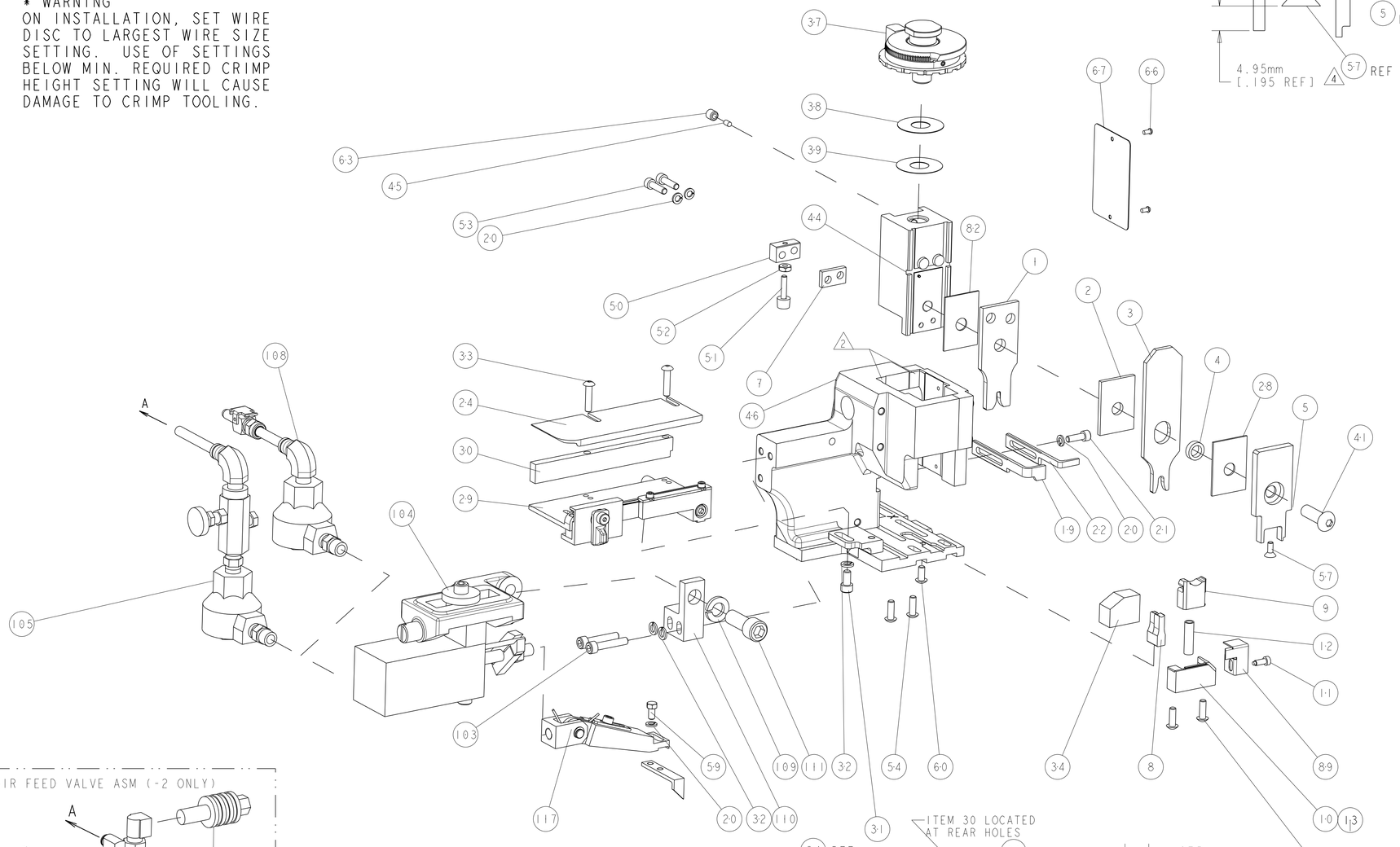

FEED TRACK POSITION GUIDE BY INS. BARREL

TERMINAL SUPPORT LOCATION

AIR FEED VALVE ASM (-2 ONLY)

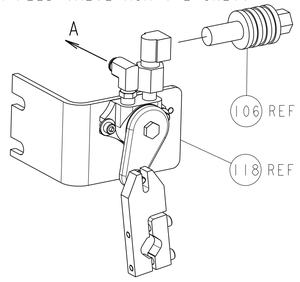

-77	-6	-3	-2	-1	U/M	PART NO	DESCRIPTION	ITEM NO
-	-	-	REF	-	-	692655-6	AIR FEED VALVE ASSEMBLY	118
-	1	1	1	1	-	461062-1	FEED FINGER ASSEMBLY	117
3 -	-	-	REF	-	..	455749-1	GUARD WINDOW	116
3 -	-	REF	-	-	..	679532-1	INSERT, GUARD	115
-	1	1	1	1	-	3-21001-5	SCR, SKT HD CAP 3/8-16 X 1.000	111
-	1	1	1	1	-	459610-1	MOUNT, FEED BRACKET	110
-	1	1	1	1	-	21024-8	WASHER, SPRG LOCK, REG 3/8	109
-	1	1	-	1	-	692655-7	AIR FEED VALVE ASSEMBLY	108
-	-	-	REF	-	-	24024-2	VALVE, SHUT OFF	106
-	-	-	1	-	-	692655-5	AIR FEED VALVE ASSEMBLY	105
-	1	1	1	1	-	461065-1	ASSEMBLY, AIR FEED	104
-	2	2	2	2	-	3-21000-9	SCR, SKT HD CAP 10-32 X 1.000	103
-	1	1	1	1	-	318563-1	GUARD, FRONT CHIP	89
-	1	1	1	1	-	455888-8	SPACER, CRIMPER	82
-	1	1	1	1	-	4088040	SF APPL INST 408-8040	72
-	1	1	1	1	-	217238-1	GENERAL INSTRUCTION PKG	71
-	1	1	1	1	-	461264-5	PLATE, IDENTIFICATION	67
-	2	2	2	2	-	21017-2	SCREW, DRIVE	66
-	1	1	1	1	-	21009-2	SCR, SET, SELF LOCKING 1/4-20 X .250	63
-	1	1	1	1	-	22733-8	SCR, BHSC, SELF-LOCKING, 8-32 X .375	60
-	1	1	1	1	-	2-22603-0	SCR, HEX HD CAP 8-32 X .312	59
-	1	1	1	1	-	1-21003-9	SCR, FLT SKT HD CAP 6-32 X .375	57
-	1	1	1	1	-	458537-2	PAWL, FEED	56
-	4	4	4	4	-	2-21002-2	SCR, BTN SKT HD CAP 8-32 X .500	54
-	2	2	2	2	-	2-21000-8	SCR, SKT HD CAP 8-32 X .625	53
-	1	1	1	1	-	21018-5	NUT, HEX, REG 6-32	52
-	1	1	1	1	-	811242-2	BUMPER, HOLD DOWN	51
-	1	1	1	1	-	690753-1	SPACER, TONKER	50
-	1	1	1	1	-	1633399-4	APPL., BASIC AIR FEED SUB ASSY	46
-	1	1	1	1	-	690191-1	PLUG,NYLON	45
-	1	1	1	1	-	819307-7	RAM, SIDE FEED	44
-	1	1	1	1	-	7-21002-9	SCR, BTN SKT HD CAP 5/16-24 X 1.00	41
-	1	1	1	1	-	690125-1	SHIM SUB-ASSY	39
-	1	1	1	1	-	1-469367-0	SHIM	38
-	1	1	1	1	-	879103-2	FINE ADJUST HEAD ASSEMBLY	37
-	1	1	1	1	-	690786-3	TERMINAL SUPPORT	34
-	2	2	2	2	-	2-21002-4	SCR, BTN SKT HD CAP 8-32 X .750	33
-	3	3	3	3	-	21024-5	WASHER, SPRG LOCK, REG NO 10	32
-	1	1	1	1	-	3-21000-4	SCR, SKT HD CAP 10-32 X .375	31
-	1	1	1	1	-	1320908-2	SPACER, STRIP GUIDE	30
-	1	1	1	1	-	1633091-7	ASSEMBLY, STRIP GUIDE	29
-	1	1	1	1	-	1-455888-0	SPACER, CRIMPER	28
-	1	1	1	1	-	1320928-3	PLATE, STRIP GUIDE	24
-	1	-	-	1	-	690472-2	STRIPPER	22
-	1	1	1	1	-	2-21000-7	SCR, SKT HD CAP 8-32 X .500	21
-	4	4	4	4	-	21024-4	WASHER, SPRG LOCK, REG NO 8	20
-	-	1	1	-	-	691353-1	STRIPPER	19
1 -	1	-	-	-	-	679625-4	SHEAR HOLDER, FRONT (NO CUT)	13
-	1	1	1	1	-	3-22280-3	SPRING, COMPRESSION	12
-	1	1	1	1	-	690461-1	STOP, SHEAR	11
1 -	-	1	1	1	-	2-690459-2	SHEAR HOLDER, FRONT	10
1 -	1	1	1	1	-	318059-4	FLOATING SHEAR, FRONT	9
1 1	1	1	1	1	-	3-662188-9	ANVIL, COMBINATION .100	8
-	1	1	1	1	-	240641-5	SPACER	7
-	-	-	-	-	..	-	-	6
-	1	1	1	1	-	122399-4	DEPRESSOR, SHEAR	5
-	1	1	1	1	-	3-238011-1	BLOCK, CRIMPER SPACER	4
1 1	1	1	1	1	-	1-318712-0	CRIMPER, INSULATION	3
-	1	1	1	1	-	2-455888-5	SPACER, CRIMPER	2
1 1	1	1	1	1	-	456407-6	CRIMPER, WIRE PREMIUM	1

THIS DRAWING IS A CONTROLLED DOCUMENT.

DIMENSIONS: INCHES

TOLERANCES UNLESS OTHERWISE SPECIFIED:
0 PLC ±-
1 PLC ±0.1
2 PLC ±0.01
3 PLC ±0.001
4 PLC ±0.0001
ANGLES ±-

MATERIAL - -
FINISH - -

DWN R.KNEPPER 05MAR2009
CHK T.ELBIN 06APR2009
APVD N.DEMING 06APR2009
PRODUCT SPEC -
APPLICATION SPEC -
WEIGHT -

TE Connectivity

NAME FINE ADJUST SIDE FEED HDM APPLICATOR

SIZE A1 | CAGE CODE 00779 | DRAWING NO C-1855476 | RESTRICTED TO -

CUSTOMER ACCESSIBLE PRODUCTION DRAWING | SCALE 3:5 | SHEET 1 OF 1 | REV B

4805 (3/11)

Pro/ENGINEER DRAWING

Mouser Electronics

Authorized Distributor

Click to View Pricing, Inventory, Delivery & Lifecycle Information:

TE Connectivity:

1855476-6