XMC4000 Application Kit

For XMC4000 Family

CPU_45A-V3

CPU Board XMC4500 General Purpose

Board User's Manual

Revision 1.0, 2014-01-10

Microcontroller

Edition 2014-01-10

Published by
Infineon Technologies AG
81726 Munich, Germany

© 2014 Infineon Technologies AG
All Rights Reserved.

Legal Disclaimer

The information given in this document shall in no event be regarded as a guarantee of conditions or characteristics. With respect to any examples or hints given herein, any typical values stated herein and/or any information regarding the application of the device, Infineon Technologies hereby disclaims any and all warranties and liabilities of any kind, including without limitation, warranties of non-infringement of intellectual property rights of any third party.

Information

For further information on technology, delivery terms and conditions and prices, please contact the nearest Infineon Technologies Office (**www.infineon.com**).

Warnings

Due to technical requirements, components may contain dangerous substances. For information on the types in question, please contact the nearest Infineon Technologies Office.

Infineon Technologies components may be used in life-support devices or systems only with the express written approval of Infineon Technologies, if a failure of such components can reasonably be expected to cause the failure of that life-support device or system or to affect the safety or effectiveness of that device or system. Life support devices or systems are intended to be implanted in the human body or to support and/or maintain and sustain and/or protect human life. If they fail, it is reasonable to assume that the health of the user or other persons may be endangered.

Revision History	
Page or Item	**Subjects (major changes since previous revision)**
Revision V1.0, 2014-01-10	Initial release

Trademarks of Infineon Technologies AG

AURIX™, C166™, CanPAK™, CIPOS™, CIPURSE™, EconoPACK™, CoolMOS™, CoolSET™, CORECONTROL™, CROSSAVE™, DAVE™, EasyPIM™, EconoBRIDGE™, EconoDUAL™, EconoPIM™, EiceDRIVER™, eupec™, FCOS™, HITFET™, HybridPACK™, I²RF™, ISOFACE™, IsoPACK™, MIPAQ™, ModSTACK™, my-d™, NovalithIC™, OptiMOS™, ORIGA™, PRIMARION™, PrimePACK™, PrimeSTACK™, PRO-SIL™, PROFET™, RASIC™, ReverSave™, SatRIC™, SIEGET™, SINDRION™, SIPMOS™, SmartLEWIS™, SOLID FLASH™, TEMPFET™, thinQ!™, TRENCHSTOP™, TriCore™.

Other Trademarks

Advance Design System™ (ADS) of Agilent Technologies, AMBA™, ARM™, MULTI-ICE™, KEIL™, PRIMECELL™, REALVIEW™, THUMB™, µVision™ of ARM Limited, UK. AUTOSAR™ is licensed by AUTOSAR development partnership. Bluetooth™ of Bluetooth SIG Inc. CAT-iq™ of DECT Forum. COLOSSUS™, FirstGPS™ of Trimble Navigation Ltd. EMV™ of EMVCo, LLC (Visa Holdings Inc.). EPCOS™ of Epcos AG. FLEXGO™ of Microsoft Corporation. FlexRay™ is licensed by FlexRay Consortium. HYPERTERMINAL™ of Hilgraeve Incorporated. IEC™ of Commission Electrotechnique Internationale. IrDA™ of Infrared Data Association Corporation. ISO™ of INTERNATIONAL ORGANIZATION FOR STANDARDIZATION. MATLAB™ of MathWorks, Inc. MAXIM™ of Maxim Integrated Products, Inc. MICROTEC™, NUCLEUS™ of Mentor Graphics Corporation. Mifare™ of NXP. MIPI™ of MIPI Alliance, Inc. MIPS™ of MIPS Technologies, Inc., USA. muRata™ of MURATA MANUFACTURING CO., MICROWAVE OFFICE™ (MWO) of Applied Wave Research Inc., OmniVision™ of OmniVision Technologies, Inc. Openwave™ Openwave Systems Inc. RED HAT™ Red Hat, Inc. RFMD™ RF Micro Devices, Inc. SIRIUS™ of Sirius Satellite Radio Inc. SOLARIS™ of Sun Microsystems, Inc. SPANSION™ of Spansion LLC Ltd. Symbian™ of Symbian Software Limited. TAIYO YUDEN™ of Taiyo Yuden Co. TEAKLITE™ of CEVA, Inc. TEKTRONIX™ of Tektronix Inc. TOKO™ of TOKO KABUSHIKI KAISHA TA. UNIX™ of X/Open Company Limited. VERILOG™, PALLADIUM™ of Cadence Design Systems, Inc. VLYNQ™ of Texas Instruments Incorporated. VXWORKS™, WIND RIVER™ of WIND RIVER SYSTEMS, INC. ZETEX™ of Diodes Zetex Limited.

Last Trademarks Update 2011-02-24

Table of Contents

Introduction **7**

1 Overview **7**
1.1 Key Features 7
1.2 Block Diagram 8

2 Hardware Description **9**
2.1 Power Supply 10
2.2 Reset 12
2.3 Clock Generation 12
2.4 Boot Option 13
2.5 Debug Interface 14
2.5.1 On-board USB Debugger 14
2.5.2 Cortex Debug Connector (10-pin) 15
2.5.3 Cortex Debug+ETM Connector (20-pin) 16
2.6 Serial Flash Memory 18
2.7 USB 19
2.8 RTC 21
2.9 User LEDs and User Buttons 22
2.10 Potentiometer 22
2.11 Satellite Connectors 23
2.11.1 COM Connector 24
2.11.2 HMI Connector 25
2.11.3 ACT Satellite Connector 26

3 Differences to Board Version V2 ..... **27**

4 Production Data **27**
4.1 Schematics 27
4.2 Component Placement and Geometry 32
4.3 Bill of Material (BOM) 33

List of Figures

Figure 1 CPU_45A-V3 Board Block Diagram....8
Figure 2 CPU Board XMC4500 General Purpose (CPU_45A-V3)....9
Figure 3 Powering option through USB interface (5 V)....10
Figure 4 CPU_45A-V3 Board Power....11
Figure 5 Battery (VBAT Supply)....11
Figure 6 Reset....12
Figure 7 Reset LED and Reset Switch....12
Figure 8 Clock Generation....13
Figure 9 Boot Options Switch....13
Figure 10 On-Board USB Debugger....14
Figure 11 Cortex Debug Connector (10-pin)....15
Figure 12 Cortex Debug Connector (10-pin) Layout....15
Figure 13 Cortex Debug+ETM Connector (20-pin)....16
Figure 14 Cortex Debug+ETM Connector (20-pin) Layout....17
Figure 15 Quad SPI Flash Interface Circuit....18
Figure 16 Quad SPI Flash....18
Figure 17 USB Connector Schematic....19
Figure 18 USB power generation - Host/OTG mode....19
Figure 19 Battery Holder for Coin Cell....21
Figure 20 RTC....21
Figure 21 GPIO LED....22
Figure 22 Satellite Connectors....23
Figure 23 Satellite Connector Type COM....24
Figure 24 Satellite Connector Type HMI....25
Figure 25 Satellite Connector Type ACT....26
Figure 26 Schematic of Satellite Connectors, USB-OTG....28
Figure 27 Schematic of XMC4500....29
Figure 28 Schematic of Power Supply, Debug Connectors, Reset Circuit....30
Figure 29 Schematic of On-board Debugger....31
Figure 30 Component Placement and Geometry....32

List of Tables

Table 1 Power status LED’s 10
Table 2 Power Measurement 11
Table 3 Boot Options Settings 13
Table 4 Cortex Debug Connector (10 Pin) 15
Table 5 Cortex Debug+ETM Connector (20 Pin) 16
Table 6 Quad SPI Signals 18
Table 7 USB micro AB connector Pinout 19
Table 8 GPIO LED 22
Table 9 User Button 22
Table 10 Potentiometer 22
Table 11 Differences to older board versions 27
Table 12 BOM of CPU_45A-V3 Board 33

Introduction

This document describes the features and hardware details of the CPU Board XMC4500 General Purpose (CPU_45A-V3) designed to work with Infineon's XMC4500 Microcontroller. This board is part of Infineon's XMC4000 Application Kits.

1 Overview

The CPU board CPU_45A-V3 houses the XMC4500 Microcontroller and three satellite connectors (HMI, COM, ACT) for application expansion. The board along with satellite cards (e.g. HMI_OLED-V1, COM_ETH-V1, AUT_ISO-V1, MOT_GPDLV-V boards) demonstrates the capabilities of XMC4500. The main use case for this board is to demonstrate the generic features of XMC4500 device including tool chain. The focus is safe operation under evaluation conditions. The board is neither cost nor size optimized and does not serve as a reference design.

1.1 Key Features

The CPU_45A-V3 board is equipped with the following features

- XMC4500 (ARM® Cortex™-M4-based) Microcontroller, 120 MHz CPU clock, 1 MByte on-chip Flash, 160 kByte RAM, LQFP-144,
- Connection to XMC4500 satellite cards via satellite connectors COM, HMI and ACT
- USB OTG Host/Device support via micro USB connector
- Debug options
  - On-board Debugger via Debug USB connector
  - Cortex Debug connector 10-pin (0.05")
  - Cortex Debug+ETM connector 20-pin (0.05")
- Reset push button
- 32 MBit quad SPI flash memory
- Boot option switch
- PowerScale Connector: Ready for MCU power consumption analysis
- 5 LED's
  - 3 Power indicating LED's
  - 1 User LEDs (P3.9)
  - 1 RESET LED
  - 1 Debug LED
- User Button connected to P2.15
- Potentiometer, connected to analog input P14.1
- Power supply
  - Via Micro-USB connector in USB device mode
  - Via satellite connector pins (COM/ACT satellites cards can supply power to CPU board)
  - Via Debug USB connector
  - RTC backup battery

1.2 Block Diagram

Figure 1 shows the functional block diagram of the CPU_45A-V3 board. For more information about the power supply please refer to chapter 2.1.

The CPU board has got the following building blocks:

- 3 Satellite Connectors (COM, HMI ACT)
- On-board Debugger via Debug USB connector (Micro-USB)
- User LED connected to P3.9
- User Button connected to P2.15
- Quad SPI flash memory (EE) connected to USIC1 Channel1 with Chip-Select1
- 2 Cortex Debug Connectors
- Variable resistor (POTI) connected to GPIO P14.1
- USB On-The-Go Connector (Micro-USB)

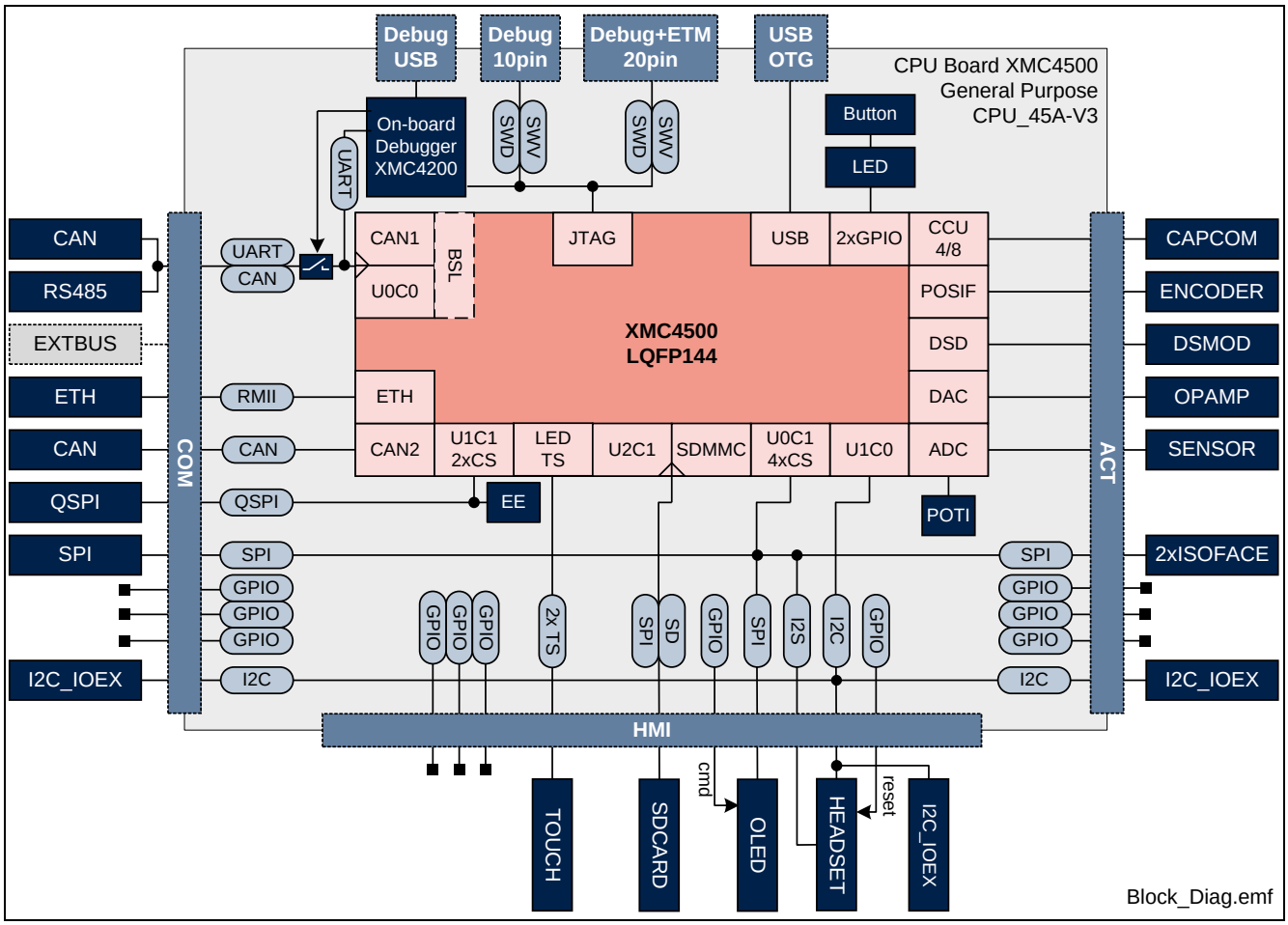

Figure 1 CPU_45A-V3 Board Block Diagram

2 Hardware Description

The following sections give a detailed description of the hardware and how it can be used.

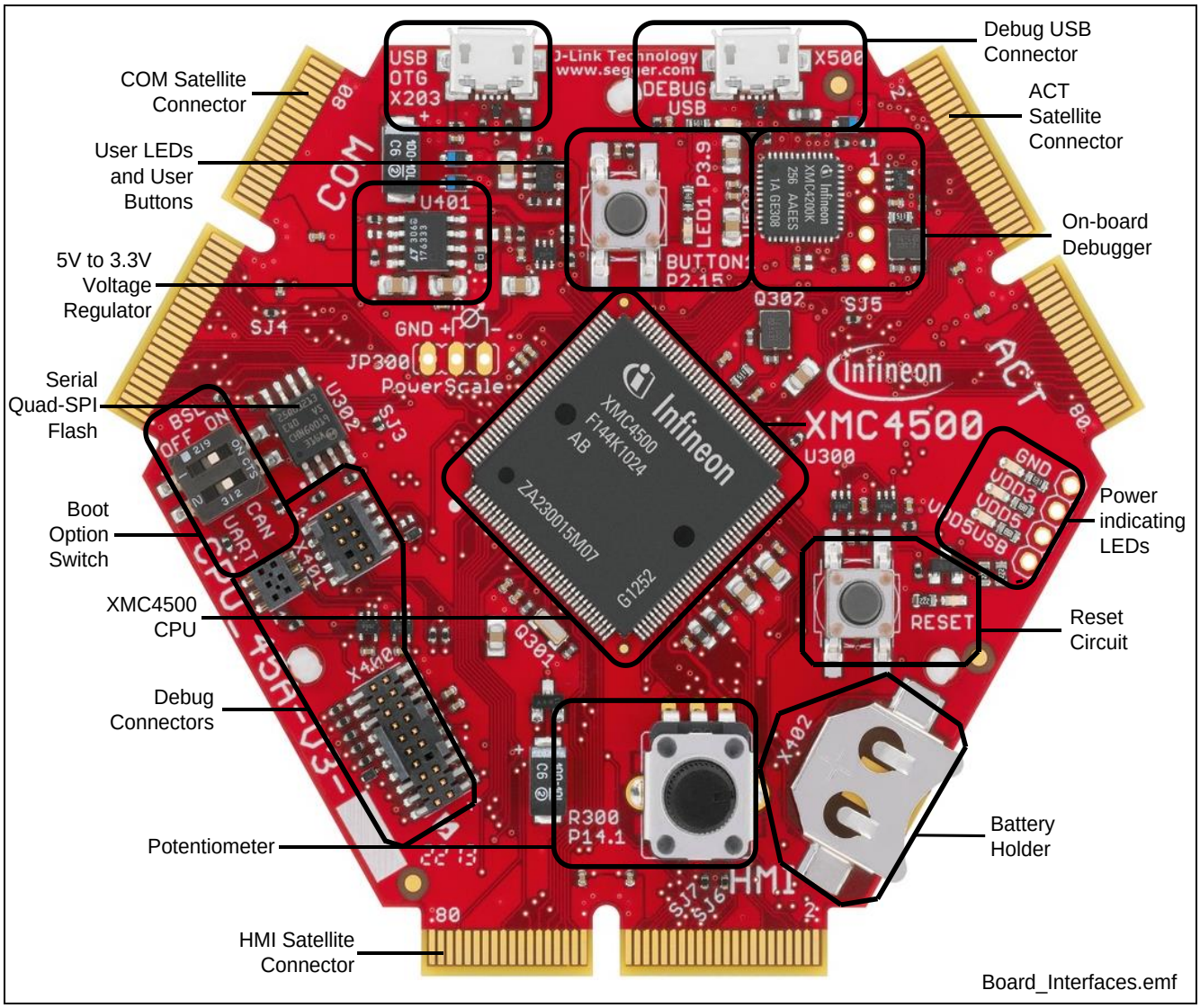

Figure 2 CPU Board XMC4500 General Purpose (CPU_45A-V3)

2.1 Power Supply

The CPU_45A-V3 board can be powered via the USB plug (5 V); however, there is a current limit that can be drawn from the host PC through USB. If the CPU_45A-V3 board is used to drive other satellite cards (e.g. AUT_ISO-V1 or MOT_GPDLV-V2) and the total current required exceeds 500 mA, then the board needs to be powered by either an external power supply connected to USB or by a satellite card, which supports external power supply like e.g. AUT_ISO-V1, MOT_GPDLV-V2, COM_ETH-V1.

For powering the board through USB interface, connect the USB cable provided with the kit to the Micro-USB connector on board.

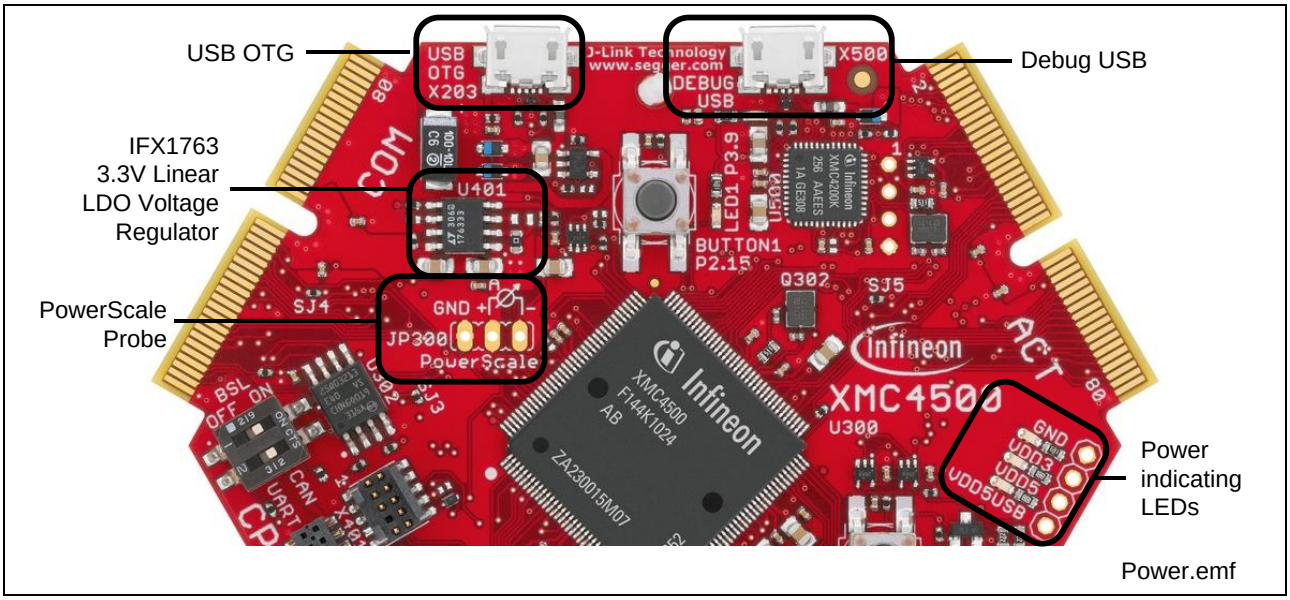

Figure 3 Powering option through USB interface (5 V)

To indicate the power status of CPU_45A-V3 board three LED's are provided on board (See Figure 3). The LED will be "ON" when the corresponding rail is powered.

Table 1 Power status LED's

LED Reference	Power Rail	Voltage	Note
V401	VDD5	5 V	Must always be "ON"
V402	VDD5USB	5 V	"ON" if powered by USB plug
V403	VDD3.3	3.3 V	Must always be "ON"

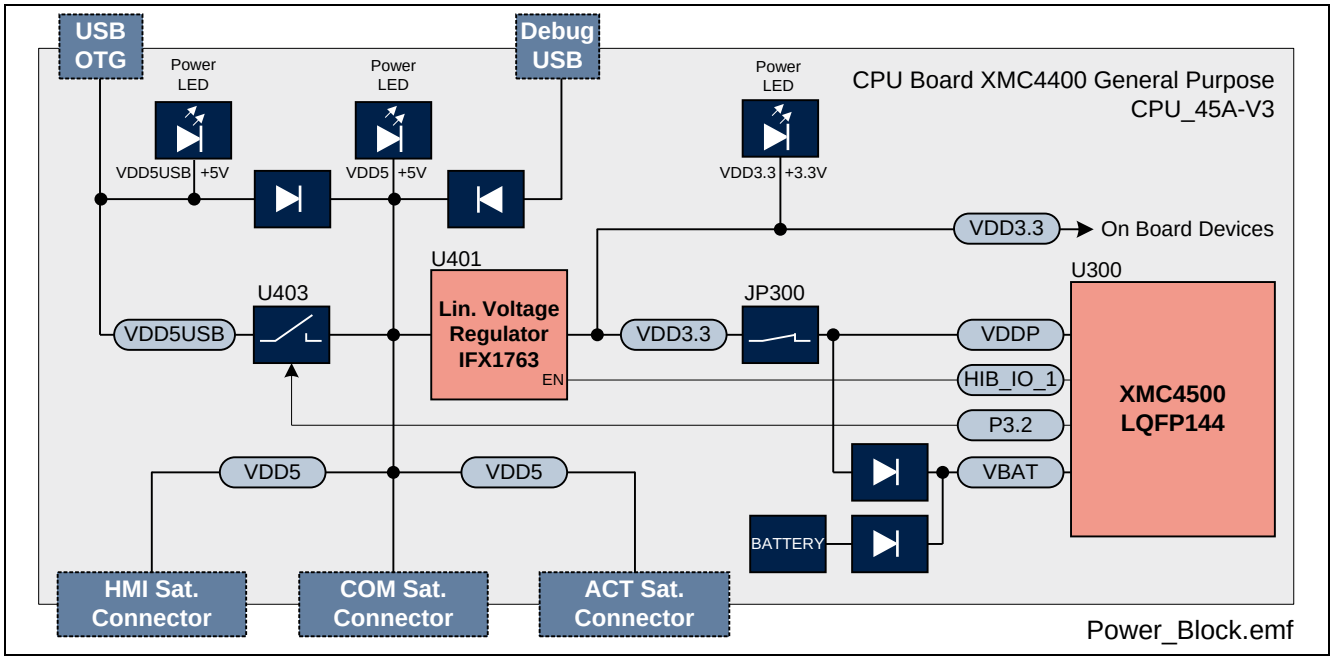

Figure 4 CPU_45A-V3 Board Power

Figure 5 Battery (VBAT Supply)

Hitex PowerScale probe is provided on the CPU_45A-V3 board to measure the power consumption.

Table 2 Power Measurement

Jumper	Function	Description
JP300	PowerScale	A Hitex PowerScale probe can be connected for current sensing the VDD3.3 (CPU power source). Default: pos. 1-2 (closed) *Note: On the PCB there is a shorting trace between pin 1-2. This trace has to be cut first, before using PowerScale. Pin 3 is GND.*

The maximum current drawn by the CPU board without any satellite cards connected is about 150 mA.

2.2 Reset

The reset pin (PORST#) of the XMC45000 is a bi-directional pin. An internal pull-up resistor will keep the PORST# pin high during normal operation. A low level at this pin will force a hardware reset. In case of an internal reset the PORST# pin will drive a low signal. An internal circuit of the XMC4500 ensures a save Power-on-Reset. XMC4500 does not require any additional external components to generate a reset signal during power-up. An on-board reset button (SW400, RESET) supports a hardware reset of the CPU during operation. The reset signal is also routed to all satellite connectors. The reset state is indicated by a red LED (V407). The LED will be “ON” during reset state and will be “OFF” during normal operation conditions.

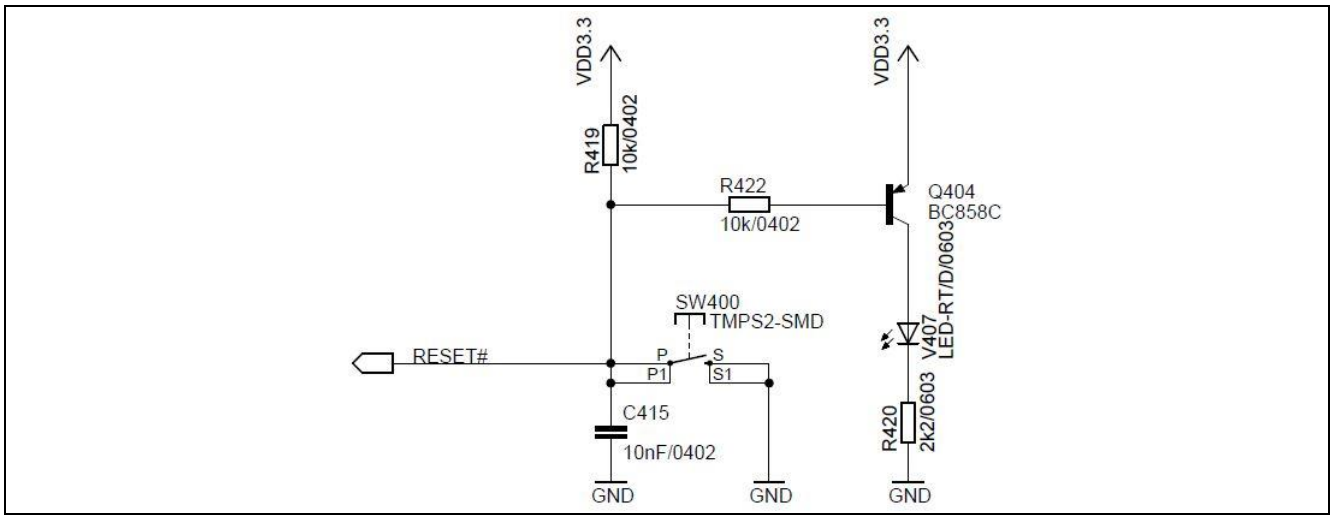

Figure 6 Reset

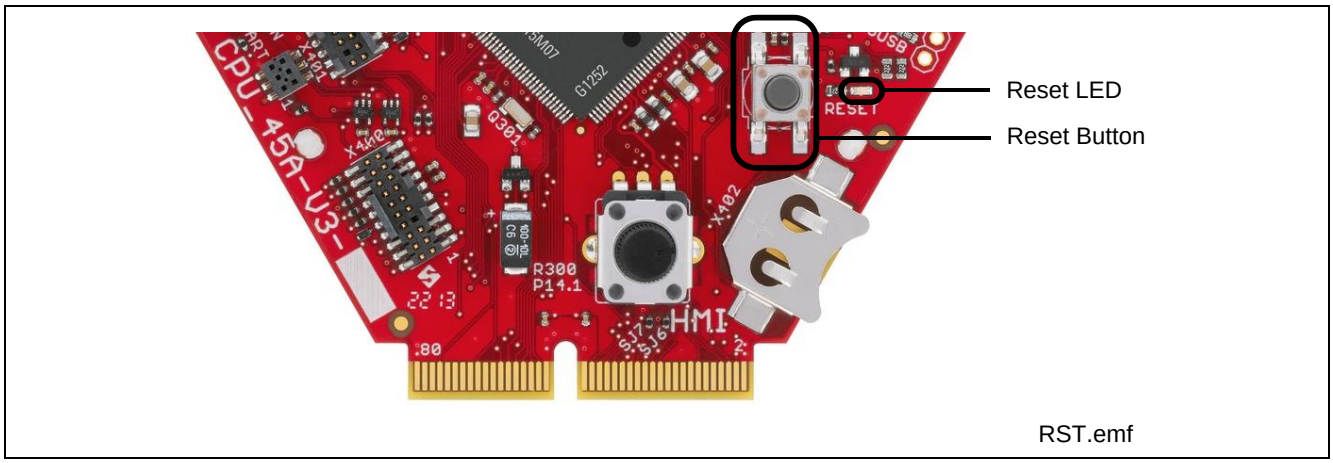

Figure 7 Reset LED and Reset Switch

2.3 Clock Generation

An external 12 MHz crystal provides the clock signal to the XMC4500 microcontroller. The drive strength of the oscillator is set to maximum by software, in order to ensure a safe start-up of the oscillator even under worst case conditions. A serial 510 Ohm resistor will attenuate the oscillations during operations.

For the RTC clock a separate external 32.768 kHz crystal is used on board.

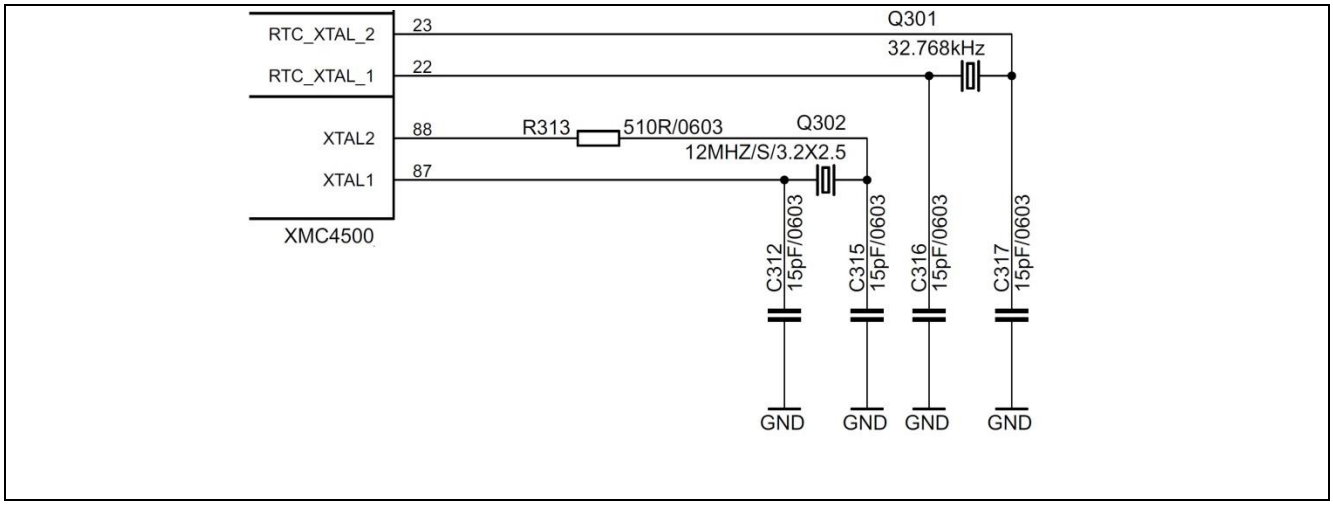

Figure 8 Clock Generation

2.4 Boot Option

During power-on-reset the XMC4500 latches the dip switch SW300 settings via the TCK and the TMS pin. Based on the values latched different boot options are possible.

Table 3 Boot Options Settings

BSL (TMS)	CAN/UART (TCK)	Boot Option
OFF (1)	UART (0)	Normal Mode (Boot from flash)
ON (0)	UART (0)	ASC BSL Enabled (Boot from UART)
OFF (1)	CAN (1)	BMI Customized Boot Enabled
ON (0)	CAN (1)	CAN BSL Enabled (Boot from CAN)

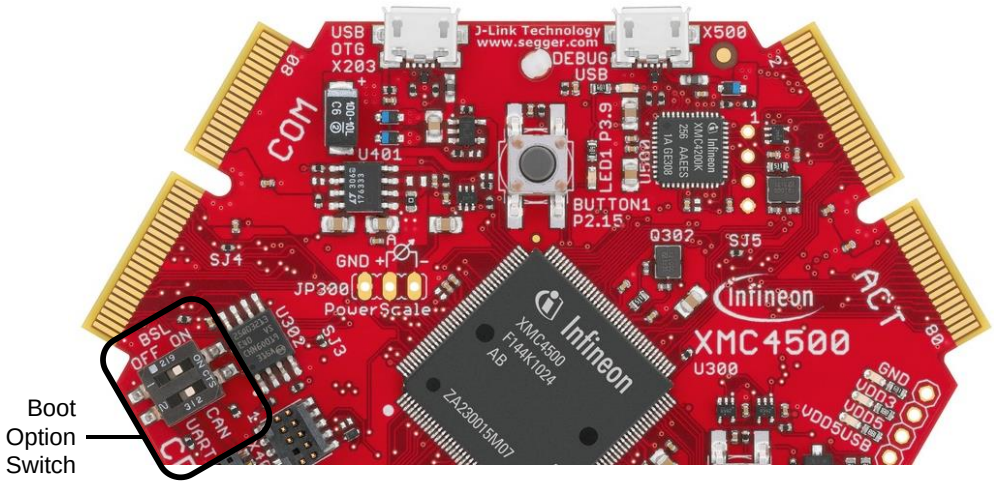

Boot_Switch.emf

Figure 9 Boot Options Switch

2.5 Debug Interface

The CPU_45A-V3 board supports JTAG debug via 3 different connectors.

- On-board Debugger
- Cortex Debug Connector (10-pin)
- Cortex Debug+ETM Connector (20-pin)

The Hexagon Application Boards are designed to use “Serial Wire Debug” as debug interface. JTAG is not supported by default because the GPIO P0.7 (TDI), where the required TDI function is mapped to, is used by various Actuator boards connected to the ACT satellite connector.

Note: It is strongly recommended not to use JTAG debug mode, especially if satellites boards are connected, which uses the GPIO 0.7. For the same reason also do not use the on-board debugger in JTAG mode.

If you want to use the JTAG debug mode through the cortex debug connectors (X400, X401) anyway, enable the JTAG interface of the XMC device by assembling the pull-up resistor R427 (4k7 Ohm) and the resistor R410 (0 - 33 Ohm).

2.5.1 On-board USB Debugger

The on-board debugger supports

- Serial Wire Debug
- Serial Wire Viewer
- Full Duplex UART communication via a USB Virtual COM

The on-board debugger can be accessed through the Debug USB connector shown in Figure 10. The Debug LED V502 shows the status during debugging.

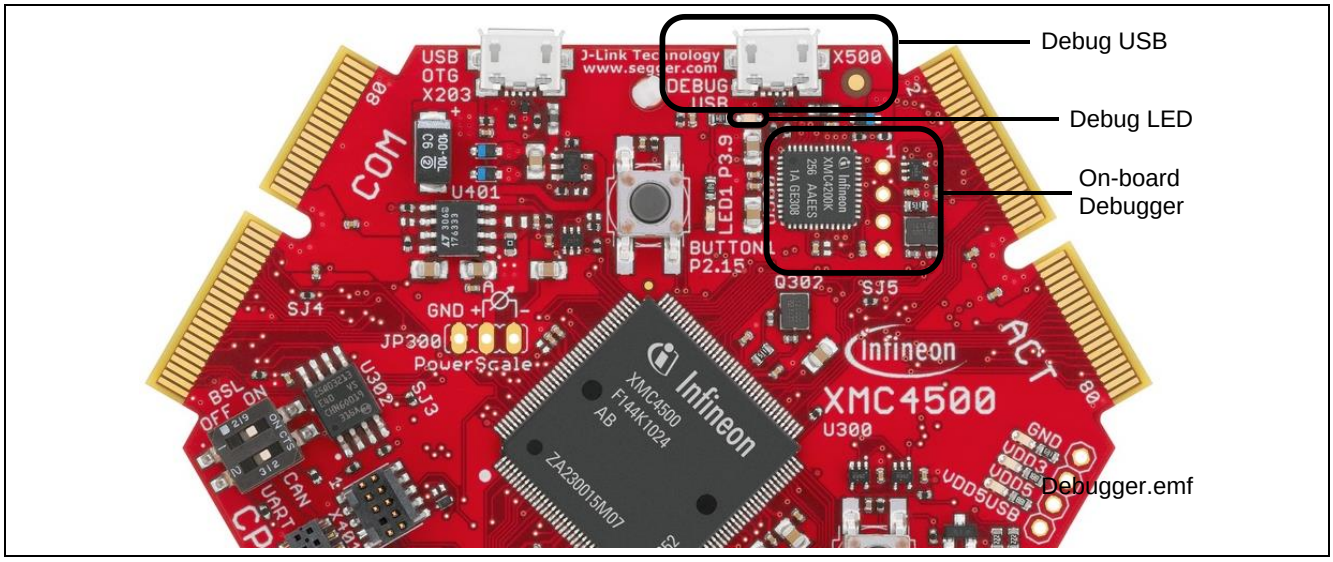

Figure 10 On-Board USB Debugger

When using an external debugger connected to the 10-pin/20-pin Cortex Debug Connector, the on-board debugger is switched off.

When using the USB virtual COM port function of the on-board debugger the UART interface to the COM satellite is disabled through the switches U301 and U303.

2.5.2 Cortex Debug Connector (10-pin)

The CPU_45A-V3 board supports Serial Wire debug operation and Serial Wire viewer operation (via the SWO signal when Serial Wire debug mode is used) through the 10-pin Cortex Debug Connector.

When using an external debugger connected to the 10-pin Cortex Debug Connector, the on-board debugger is switched off.

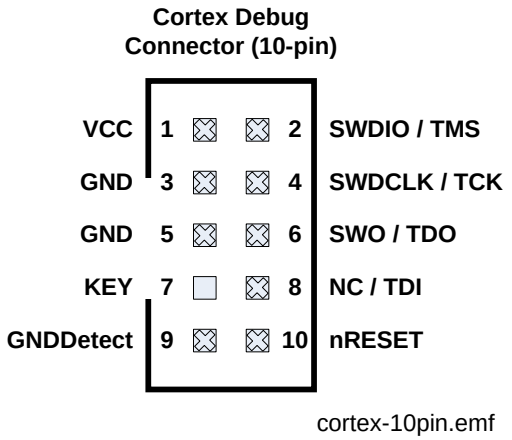

Figure 11 Cortex Debug Connector (10-pin)

Table 4 Cortex Debug Connector (10 Pin)

Pin No.	Signal Name	Serial Wire Debug	JTAG Debug
1	VCC	+3.3 V	+3.3 V
2	SWDIO / TMS	Serial Wire Data I/O	Test Mode Select
3	GND	Ground	Ground
4	SWDCLK / TCK	Serial Wire Clock	Test Clock
5	GND	Ground	Ground
6	SWO / TDO	Trace Data OUT	Test Data OUT
7	KEY	KEY	KEY
8	NC / TDI	Not connected	Test Data IN
9	GNDDetect	Ground Detect	Ground Detect
10	nRESET	Reset (Active Low)	Reset (Active Low)

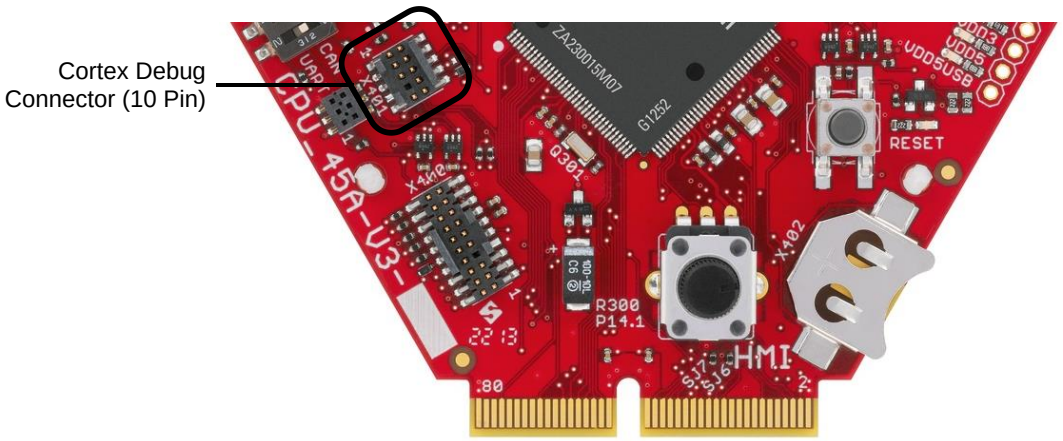

Figure 12 Cortex Debug Connector (10-pin) Layout

2.5.3 Cortex Debug+ETM Connector (20-pin)

The CPU_45A-V3 board supports Serial Wire debug operation, Serial Wire viewer operation (via SWO connection when Serial Wire debug mode is used) and Instruction Trace operation through the 20-pin Cortex Debug+ETM Connector.

JTAG operation additionally would require the TDI (P0.7) signal. By default the TDI signal is disconnected from the Cortex Debug Connectors by a not assembled resistor R410, because the pin P0.7 is used by the Actuator boards connected to the ACT satellite connector.

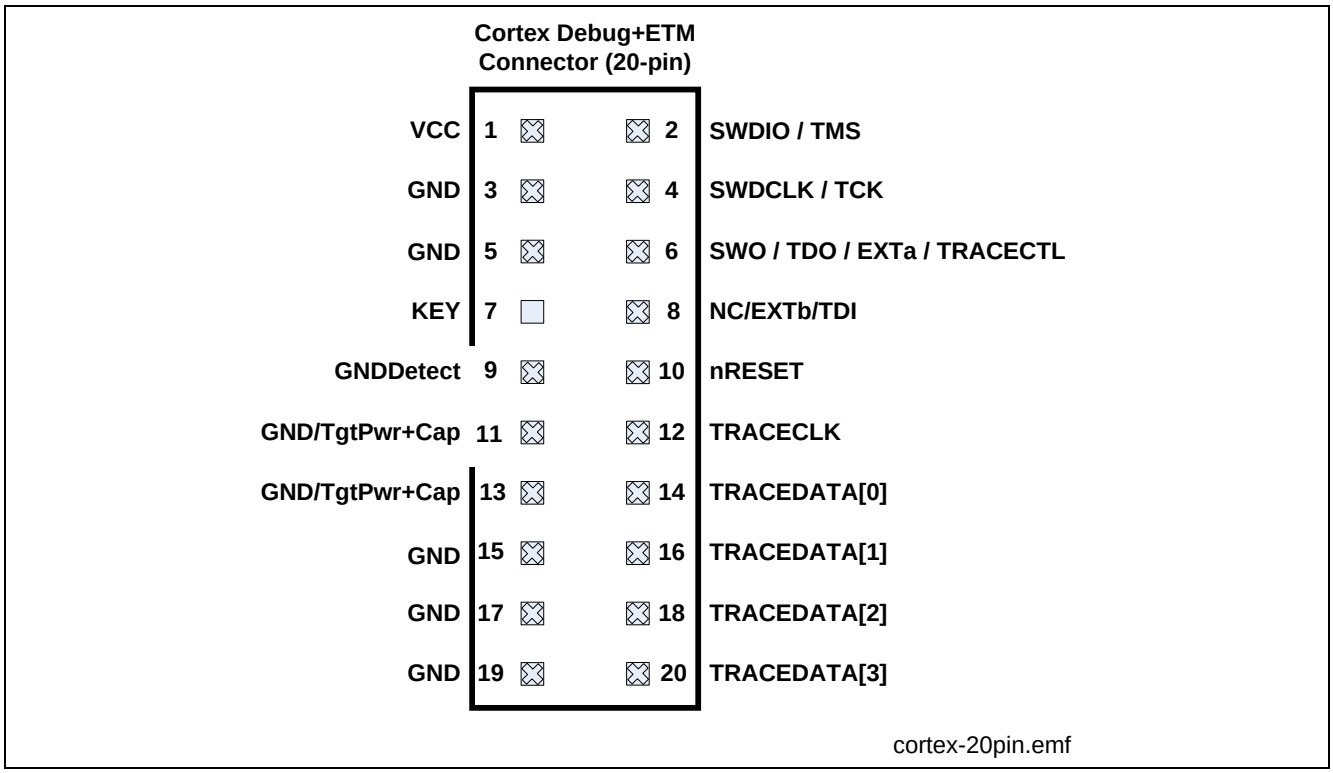

Figure 13 Cortex Debug+ETM Connector (20-pin)

Table 5 Cortex Debug+ETM Connector (20 Pin)

Pin No.	Signal Name	Serial Wire Debug	JTAG Debug
1	VCC	+3.3 V	+3.3 V
2	SWDIO / TMS	Serial Wire Data I/O	Test Mode Select
3	GND	Ground	Ground
4	SWDCLK / TCK	Serial Wire Clock	Test Clock
5	GND	Ground	Ground
6	SWO / TDO	Trace Data OUT	Test Data OUT
7	KEY	KEY	KEY
8	NC / TDI	Not connected	Test Data IN
9	GNDDetect	Ground Detect	Ground Detect
10	nRESET	Reset (Active Low)	Reset (Active Low)
11	GND/TgtPwr+Cap	Ground	Ground
12	TRACECLK	Trace Clock	Trace Clock
13	GND/TgtPwr+Cap	Ground	Ground
14	TRACEDATA[0]	Trace Data 0	Trace Data 0
15	GND	Ground	Ground

Table 5 Cortex Debug+ETM Connector (20 Pin)

Pin No.	Signal Name	Serial Wire Debug	JTAG Debug
16	TRACEDATA[1]	Trace Data 1	Trace Data 1
17	GND	Ground	Ground
18	TRACEDATA[2]	Trace Data 2	Trace Data 2
19	GND	Ground	Ground
20	TRACEDATA[3]	Trace Data 3	Trace Data 3

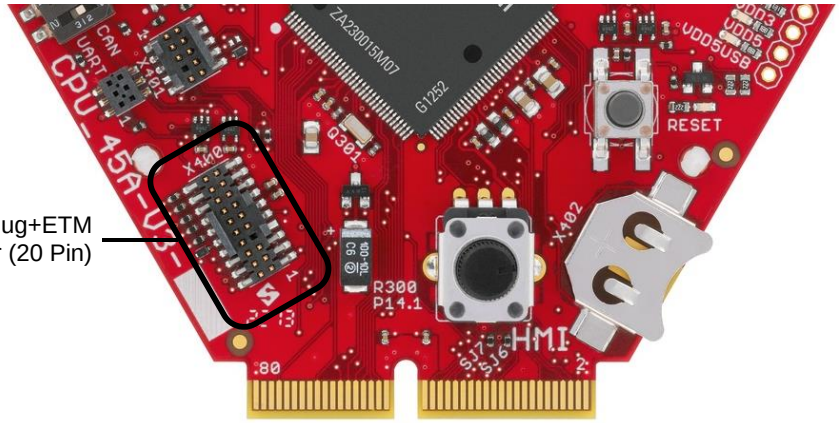

Figure 14 Cortex Debug+ETM Connector (20-pin) Layout

2.6 Serial Flash Memory

The CPU_45A-V3 board provides a 32 Mbit serial flash memory from Micron (type: N25Q03) interfaced to XMC4500 through a SPI interface. The SPI interface can be configured as single, dual or quad SPI.

Table 6 Quad SPI Signals

Pin No.	Pin Description	Signal Name	Signal Description
P0.13	U1C1_SCLKOUT	CLK	Clock
P3.3	U1C1_SELO1	CS#	Active Low Chip Select
P3.15	U1C1_DOUT0	DI (IO0)	Data Input/Output of Flash (MTSR/MOSI)
P3.14	U1C1_DX0B	DO (IO1)	Data Input/Output of Flash (MRST/MISO)
P0.14	U1C1_HOUT3/DWIN3	HOLD# (IO3)	Data Input/Output
P0.15	U1C1_HOUT2/DWIN2	WP# (IO2)	Data Input/Output

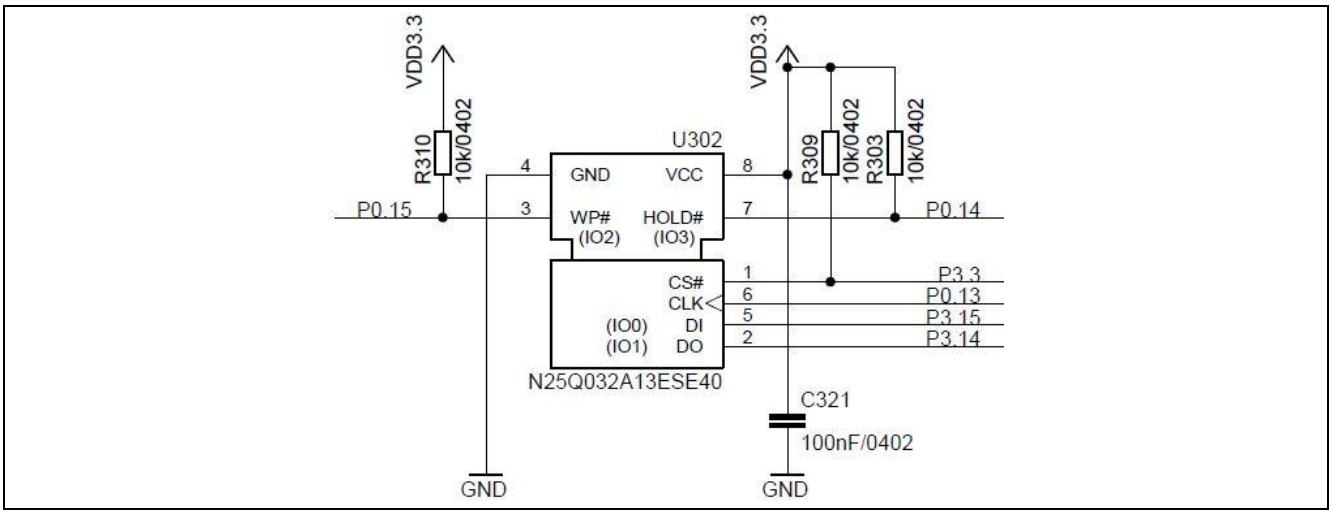

Figure 15 Quad SPI Flash Interface Circuit

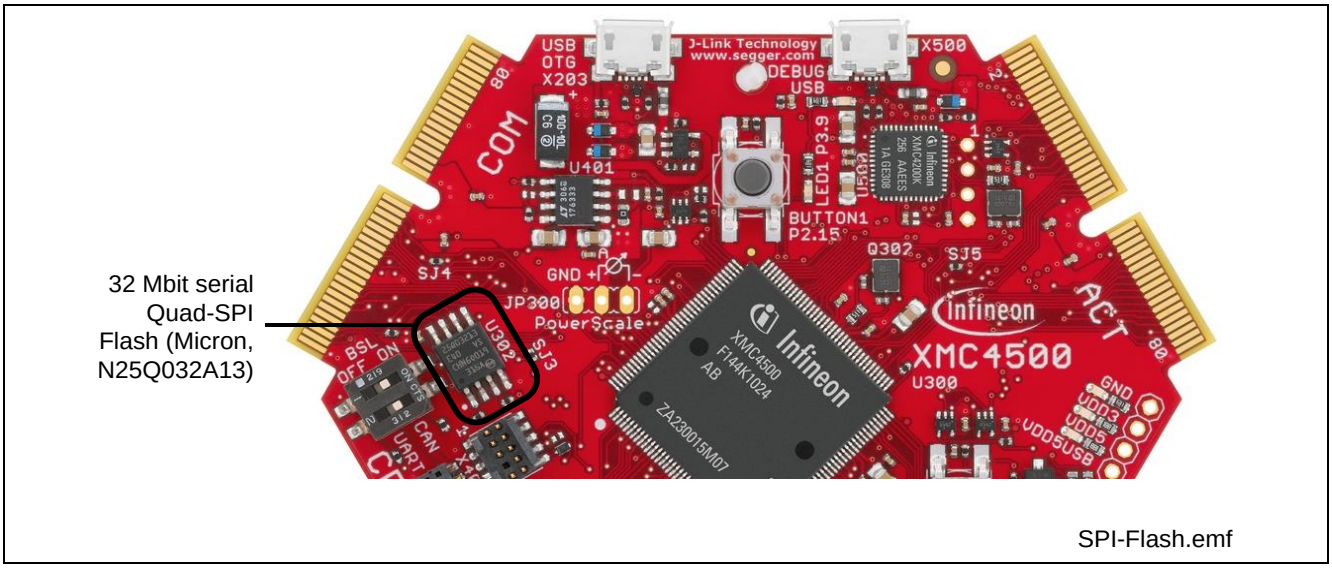

Figure 16 Quad SPI Flash

2.7 USB

The XMC4500 supports USB interface in host only mode, device only mode or as an OTG Dual Role Device (DRD). In USB device mode, power is expected through VBUS (pin 1) from an external host (e.g. PC). When the current is more than 500 mA power from an external source through satellite cards shall be used.

Note: Some PCs, notebooks or hubs have a weak USB supply which is not sufficient for proper supply. In this case use an external 5 Volt power supply or a powered USB hub.

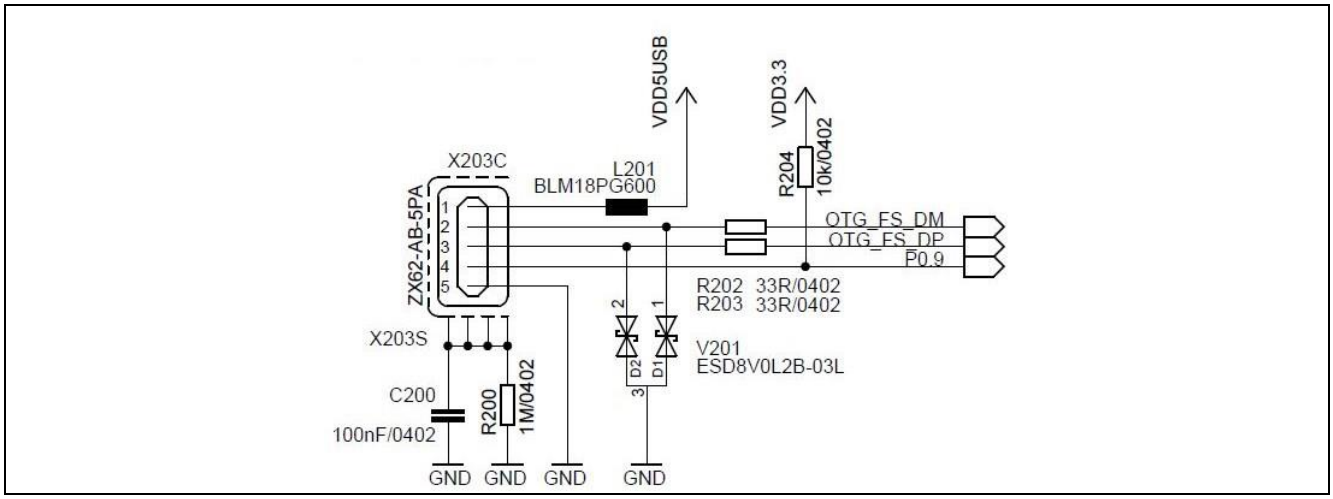

Figure 17 USB Connector Schematic

Port P0.9 of XMC4500 is connected to the USB ID pin (pin 4). An OTG device will detect whether a USB 3.0 Micro-A or Micro-B plug is inserted by checking the ID pin. When the ID = FALSE, Micro-A connector is plugged and when ID = TRUE a Micro-B connector is plugged in. When ID is true the XMC4500 acts as USB host else as USB device.

Table 7 USB micro AB connector Pinout

Pin No.	Pin Name	Pin Description
1	VBUS	5 V
2	D-	Data Minus
3	D+	Data Plus
4	ID	Identification
5	GND	Ground

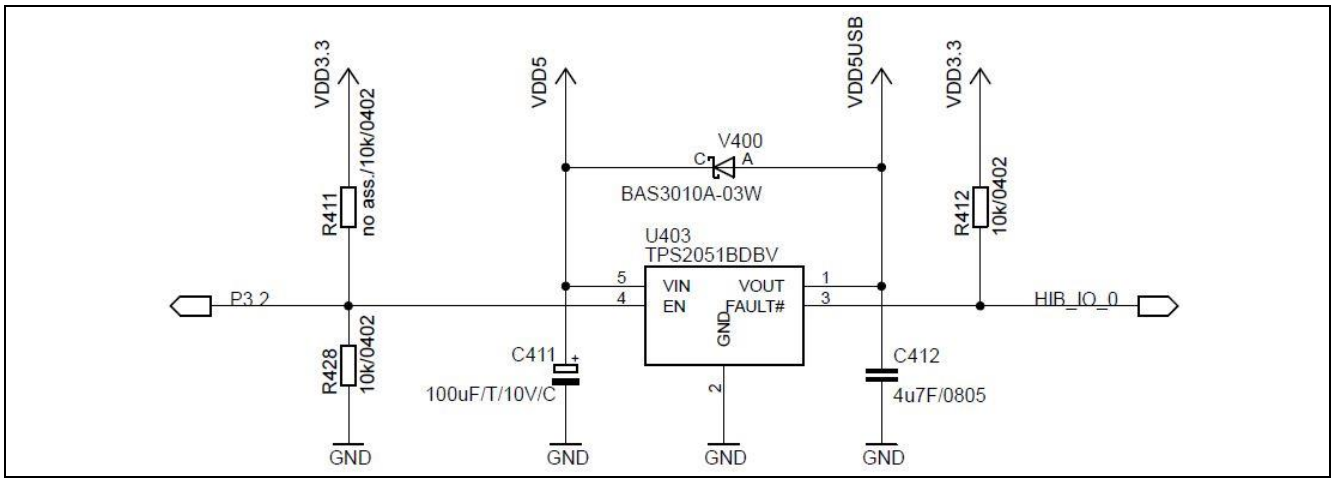

Figure 18 USB power generation - Host/OTG mode

In the host only mode and OTG mode the CPU_45A-V3 board is capable of supplying power to the connected device (e.g. USB mouse). The board has a power-switch which is controlled by the XMC4500. Port P3.2 (active high) is used for this purpose. In the Host/OTG mode a low active FAULT signal indicates to XMC4500 via HIB_IO_0 signal, if more than 500 mA current is drawn by the external device. HIB_IO_0 signal is used as general purpose input pin for this implementation.

Diode V400 will allow powering the board through USB in all USB modes via e.g. a PC.

2.8 RTC

The XMC4400 CPU has two power domains, the Core Domain and Hibernate Domain. The Core Domain (VDDP pins) is connected to the VDD3.3 rail. An on-board LDO voltage regulator generates VDD3.3 (3.3 V) from VDD5 (5 V).

The Hibernate Domain is powered via the auxiliary supply pin VBAT, which is supplied by either a 3 V coin cell (size 1216, 1220, 1225) plugged into the battery holder (see Figure 19) or 3.3 V (VDD3.3) generated by the on-board voltage regulator.

Figure 19 Battery Holder for Coin Cell

The Real Time Clock (RTC) is located in the hibernate domain. The XMC4500 uses the HIB_IO_1 signal (active low) to shut down the external LDO voltage regulator which generates the VDD3.3 (Core Domain). Even if the Core Domain is not powered the Hibernate Domain will operate if VBAT is available. The RTC keeps running as long as the Hibernate Domain is powered via the auxiliary supply VBAT. The RTC is capable to wake-up the whole system from Hibernate mode by setting HIB_IO_1 to high.

With VDD3.3 power supply switched off and no coin cell supply the power in the capacitor connected to VBAT will provide power to the hibernate domain for about 10 seconds (depending on which features in the hibernate domain are enabled).

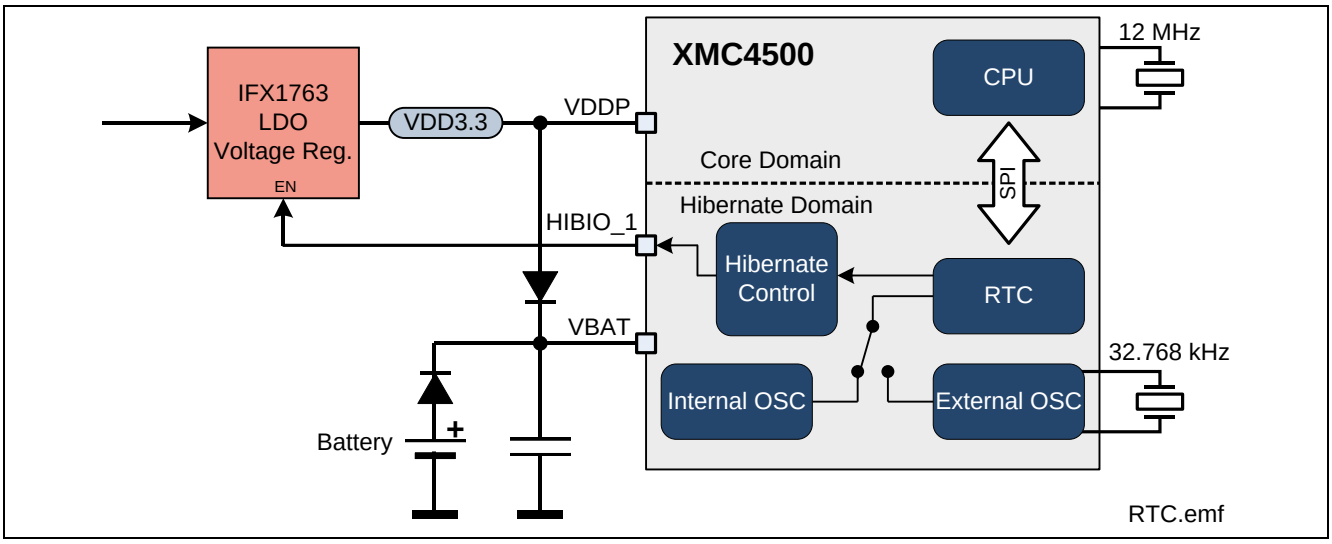

Figure 20 RTC

2.9 User LEDs and User Buttons

The port pin P3.9 of XMC4500 is connected to a LED V300. More user LED's are available through I2C GPIO expander on most of the satellite cards.

Table 8 GPIO LED

LED	Connected to Port Pin
V300	GPIO P3.9

The User Button is connected to port pin P2.15 of the XMC4500.

Table 9 User Button

Button	Connected to Port Pin
BUTTON1	P2.15

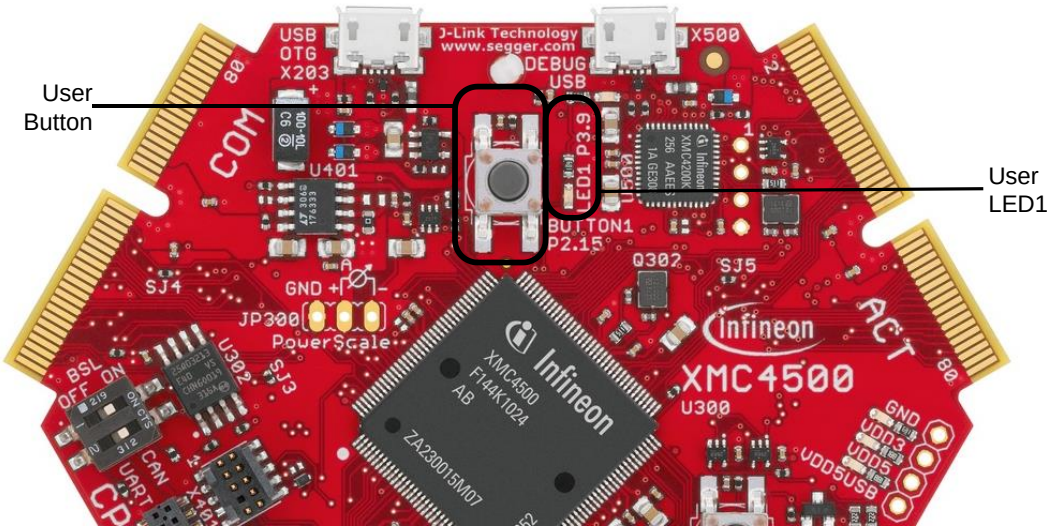

Button_LED.emf

Figure 21 GPIO LED

2.10 Potentiometer

The CPU_45A-V3 board provides a potentiometer POT1 for ease of use and testing of the on-chip analog to digital converter. The potentiometer is connected to the analog input G0_CH1 (P14.1). The analog output of the potentiometer ranges from 0 V to 3.3 V.

Table 10 Potentiometer

R300	P14.1 / G0_CH1 (Group 0, Channel 1)

2.11 Satellite Connectors

The CPU_45A-V3 board provies three satellite connectors for application extension by satellite cards:

- COM satellite connector (Communication)
- HMI satellite connector (Human Machine Interface)
- ACT satellite connector (Actuator)

Note: Satellite cards shall be connected to their matching satellite connectors only. (For e.g. COM satellite cards shall be connected to COM satellite connector only)

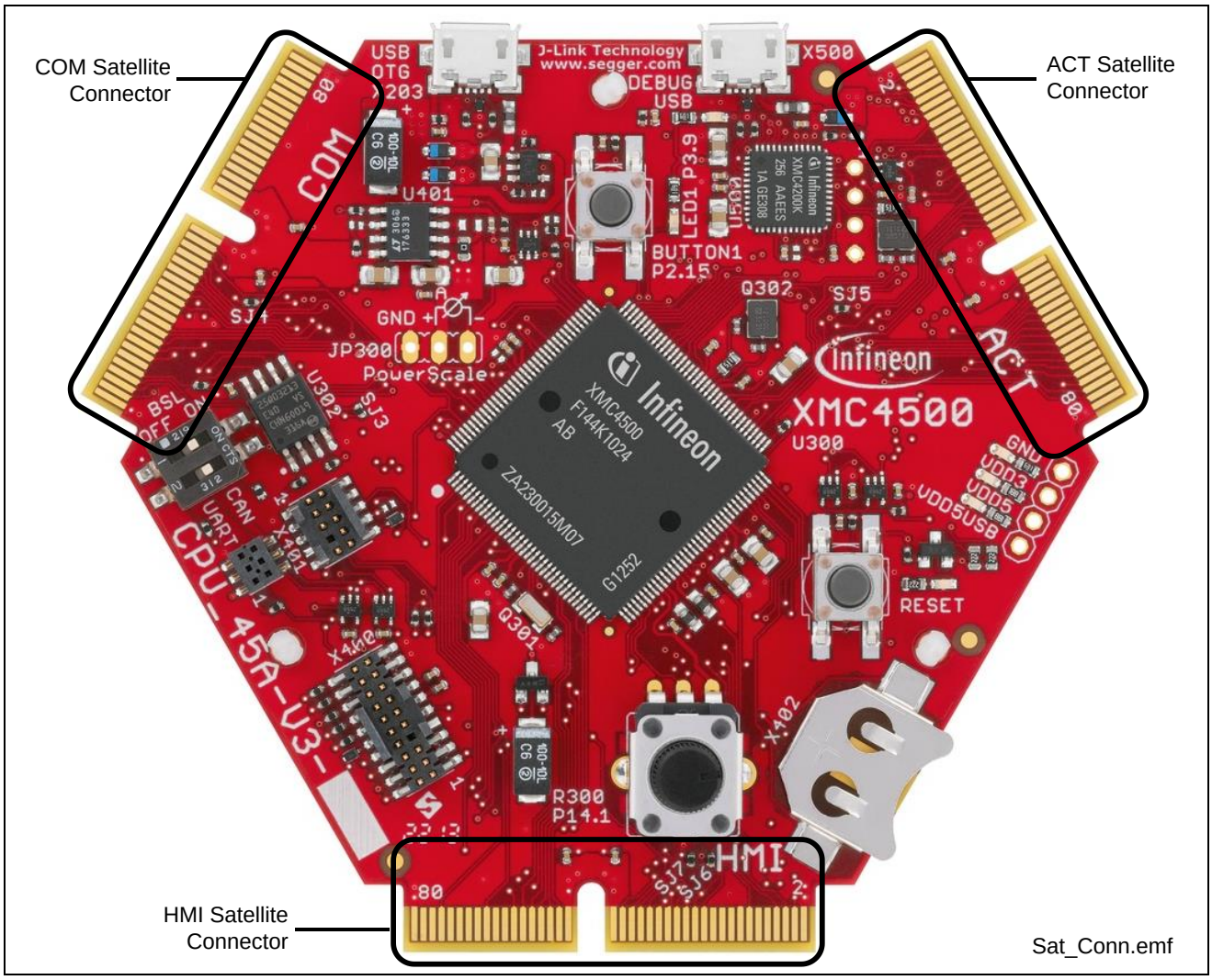

Figure 22 Satellite Connectors

2.11.1 COM Connector

The COM satellite connector on the CPU_45A-V3 board allows interface expansion through COM satellite cards (e.g. COM_ETH-V1)

Figure 23 Satellite Connector Type COM

(3) This pin is connected with the satellite connector via an analog switch

2.11.2 HMI Connector

The HMI satellite connector on the CPU_45A-V3 board allows interface expansion through HMI satellite cards.

CPU_45A-V3		Satellite Connector			CPU_45A-V3	
XMC Pin	XMC Function	Function	Pin	Function	XMC Function	XMC Pin
VSS	GND	GND	2	GND	GND	VSS
P0.11	MMC_nRST	MMC_nRST	4	MMC_CLK	MMC_CLK_OUT	P3.6
P4.0	MMC_DATA0_OUT	MMC_DATA0	6	MMC_DATA1	MMC_DATA1_OUT	P1.6
P1.7	MMC_DATA2_OUT	MMC_DATA2	8	MMC_DATA3	MMC_DATA3_OUT	P4.1
nc	nc	MMC_DATA4	10	MMC_DATA5	nc	nc
nc	nc	MMC_DATA6	12	MMC_DATA7	nc	nc
P3.5	MMC_CMD_OUT	MMC_CMD	14	MMC_BUSPOW	GND	VSS
VSS	GND	MMC_LED	16	MMC_nSDCD	nc	nc
nc	nc	MMC_SDWC	18	RSVD	nc	nc
nc	nc	RSVD	20	RSVD	nc	nc
nc	nc	RSVD	22	RSVD	nc	nc
P5.11	P5.11	OLED_CMD	24	AudioRST	P2.10	P2.10
P3.13	U0C1_DOUT0	I2S_MTSR	26	I2S_WA	U0C1_SELO0	P3.1
P2.5	U0C1_DX0B	I2S_MRST	28	I2S_MCLK	nc	nc
P3.0	U0C1_SCLKOUT	I2S_SCLK	30	I2S_SYNCLK	nc	nc
P3.13	U0C1_DOUT0	SPI_MTSR	32	SPI_CSH0	U0C1_SELO1	P3.12
P2.5	U0C1_DX0B	SPI_MRST	34	SPI_CSH1	U0C1_SELO0	P3.1
P3.0	U0C1_SCLKOUT	SPI_SCLK	36	SPI_CSH2	U0C1_SELO3	P3.8
P5.8	U1C0_SCLKOUT	I2C_SCL	38	I2C_SDA	U1C0_DX0D/DOUT0	P2.14
P0.6	P0.6	GPIO	40	HMI_GPIO1	P15.5 Input	P15.5
PORST	RESET#	RESET	42	HMI_GPIO0	P5.6	P5.6
		VDD5	44	VDD5		
		VDD5	46	VDD5		
	VAREF	AREF	48	AGND	AGND	VAGND
P14.8	VADC_G1CH0	DAC0/ADC0	50	DAC1/ADC1	VADC_G1CH1	P14.9
P14.4	VADC_G0CH4	ADC2/DACREF	52	ADC3/ORC0	VADC_G0CH6	P14.6
P14.3	VADC_G0CH3	ADC14	54	ADC15	VADC_G1CH4	P14.12
P15.3	VADC_G2CH3	ADC16	56	ADC17	VADC_G3CH5	P15.13
P15.2	VADC_G2CH2	ADC18	58	ADC19	VADC_G3CH4	P15.12
nc	nc	RSVD	60	RSVD	nc	nc
nc	nc	RSVD	62	RSVD	nc	nc
P5.10	LEDTS0_TSIN7A	TP7	64	RSVD	nc	nc
nc	nc	TP6	66	TPx1	nc	nc
nc	nc	TP5	68	TPx0	nc	nc
nc	nc	TP4	70	COL3	nc	nc
nc	nc	TP3	72	COL2	nc	nc
P2.4	LEDTS0_TSIN2A	TP2	74	COL1	nc	nc
nc	nc	TP1	76	COL0	LEDTS0_COL1	P0.10
nc	nc	TP0	78	COLA	LEDTS0_COLA	P5.7
VSS	GND	GND	80	GND	GND	VSS

Figure 24 Satellite Connector Type HMI

2.11.3 ACT Satellite Connector

The ACT satellite connector on the CPU_45A-V3 board allows interface expansion through ACT satellite cards.

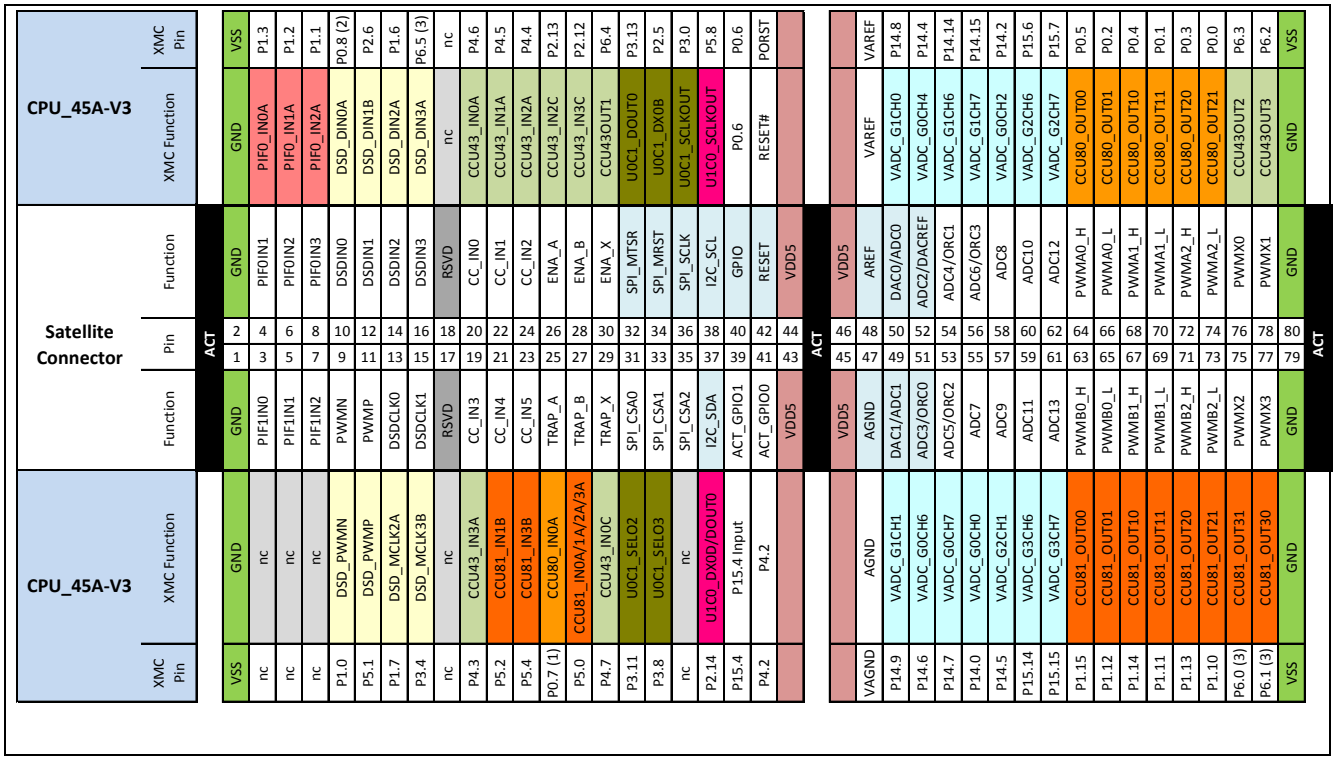

Figure 25 Satellite Connector Type ACT

(1) P0.7 can also be used for JTAG Debugging (TDI)

(2) P0.8 is used as TRST in order to enable JTAG Debug

(3) This pin is connected with the satellite connector via an analog switch

3 Differences to Board Version V2

Table 11 Differences to older board versions

Topic of Change	Description
Debugger	An on-board debugger has been added. The debugger has an USB interface (X500). An external debugger can still be used via X400 / X401.
User Push Button	A user button as been added. The user button is connected to P2.15. In V2 versions P2.15 was connected to P2.14.
I2C Connection	The SDA signal of the I2C is connected to P2.14 only. In V2 versions the SDA signal was connected to P2.14 and P2.15.
USB Shielding	The USB shield has been connected to ground through a 1 MOhm resistor and a 100 nF capacitor

4 Production Data

4.1 Schematics

This chapter contains the schematics for the CPU board:

- Schematic of Satellite Connectors, USB-OTG
- Schematic of XMC4500
- Schematic of Power Supply, Debug Connectors, Reset Circuit
- Schematic of On-board Debugger

The board has been designed with Eagle. The PCB design data of this board can be downloaded from www.infineon.com/xmc-dev.

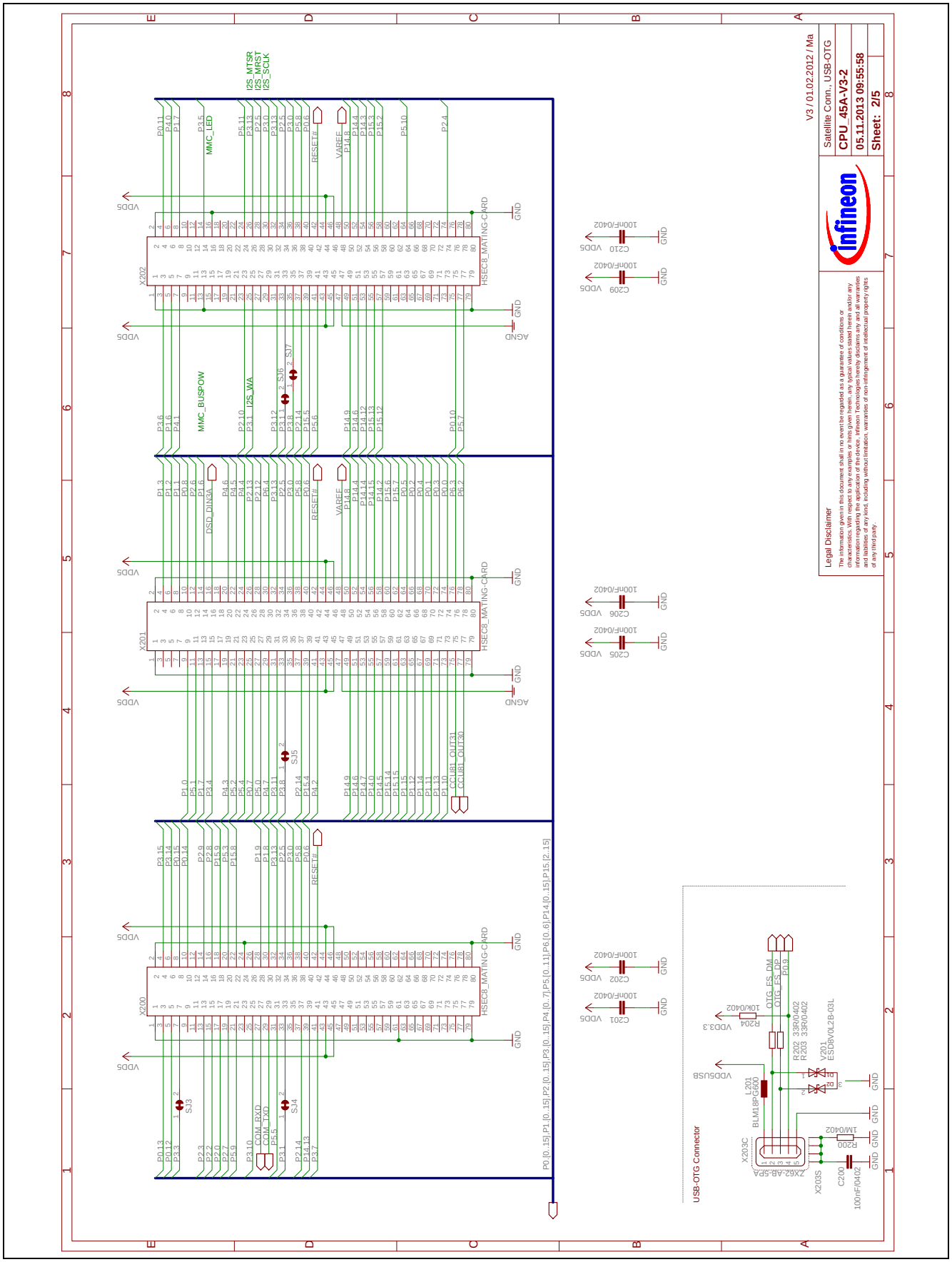
Satellite Conn., USB-OTG
CPU_45A-V3-2
05.11.2013 09:55:58
Sheet: 2/5
V3 / 01.02.2012 / Ma
Legal Disclaimer
USB-OTG Connector
X200
X201
X202
HSEC8_MATING-CARD
X203C
X203S
MMC_BUSPOW
MMC_LED
DSD_DINSA
I2S_WA
I2S_MTSR
I2S_MRST
I2S_SCLK
COM_RXD
COM_TXD
RESET#
VARE
CCU81_OUT31
CCU81_OUT30
VDD5
VDD5USB
VDD3.3
GND
AGND
C200
100nF/0402
R200
1M/0402
L201
BLM18PG600
R202 33R/0402
R203 33R/0402
V201
ESD8V0L2B-03L
R204
10k/0402
C201
C202
C205
C206
C209
C210
OTG_FS_DM
OTG_FS_DP
P0.13
P0.12
P3.3
P2.3
P2.2
P2.0
P2.7
P3.10
P5.9
P3.1
P2.14
P4.13
P3.7
P3.15
P3.14
P0.15
P0.14
P2.9
P2.8
P5.3
P15.8
P1.9
P1.8
P3.13
P2.5
P3.0
P5.8
P0.6
P3.11
P3.8
P2.4
P4.2
P1.0
P5.1
P1.7
P3.4
P4.3
P5.2
P5.4
P0.7
P3.0
P4.7
P2.11
P2.14
P2.4
P1.13
P1.10
P1.15
P1.12
P1.14
P0.1
P0.3
P0.0
P6.3
P6.2
P0.5
P0.2
P0.4
P4.6
P4.5
P2.13
P2.10
P6.4
P3.13
P2.5
P3.0
P5.8
P0.6
P1.3
P1.2
P0.11
P0.10
P2.6
P1.6
P1.7
P0.11
P4.0
P1.7
P3.5
P5.11
P3.13
P2.5
P3.0
P5.8
P0.6
P2.4
P5.10
P15.2
P15.3
P14.3
P14.4
P14.8
P14.9
P14.6
P14.12
P15.13
P15.12
P0.10
P5.7
P3.6
P1.6
P4.1
P2.10
P3.1
P3.12
P3.1
P3.8
P2.14
P1.5
P5.6
P14.9
P14.6
P14.7
P14.0
P14.5
P15.14

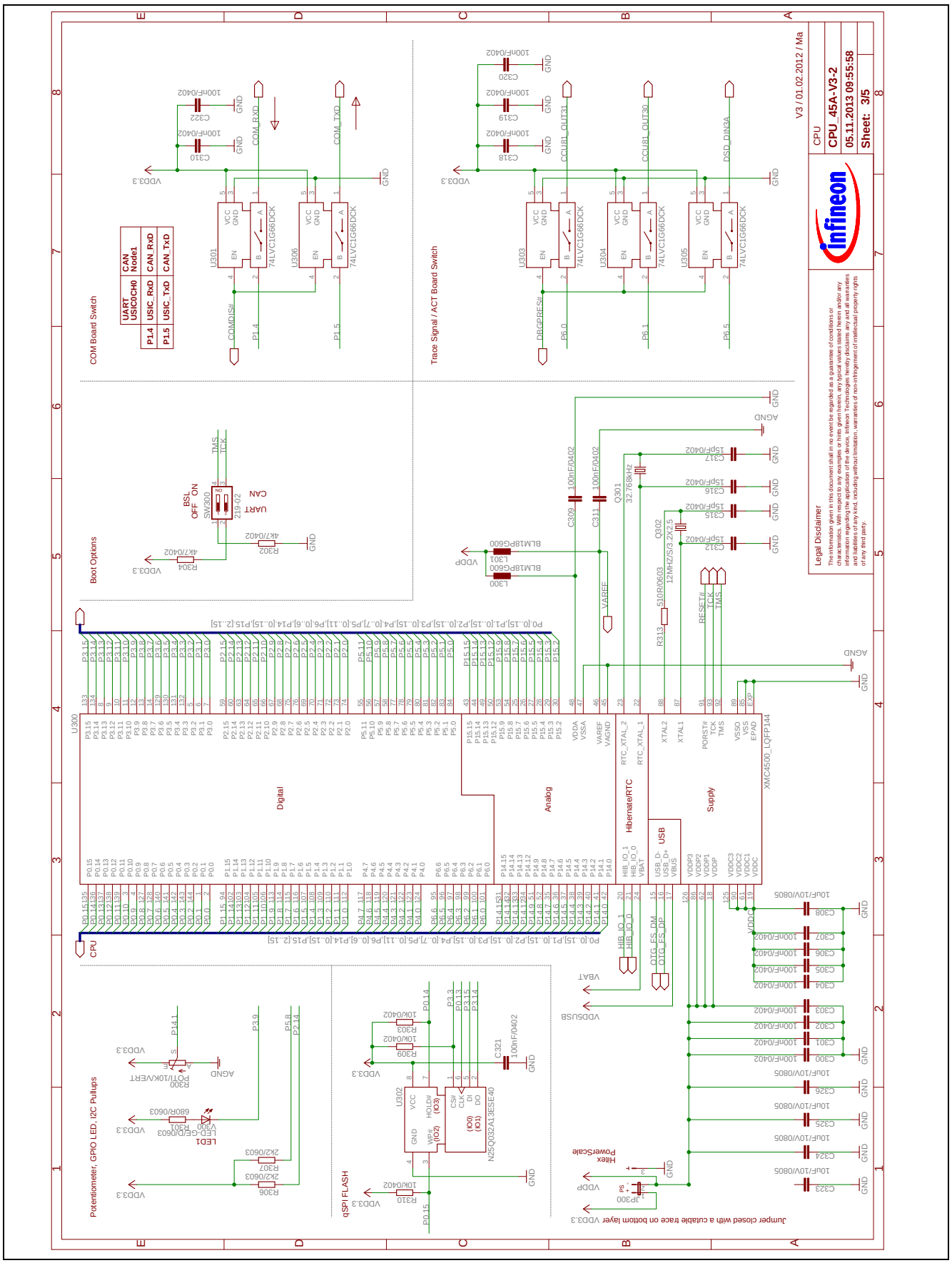

Figure 27 Schematic of XMC4500

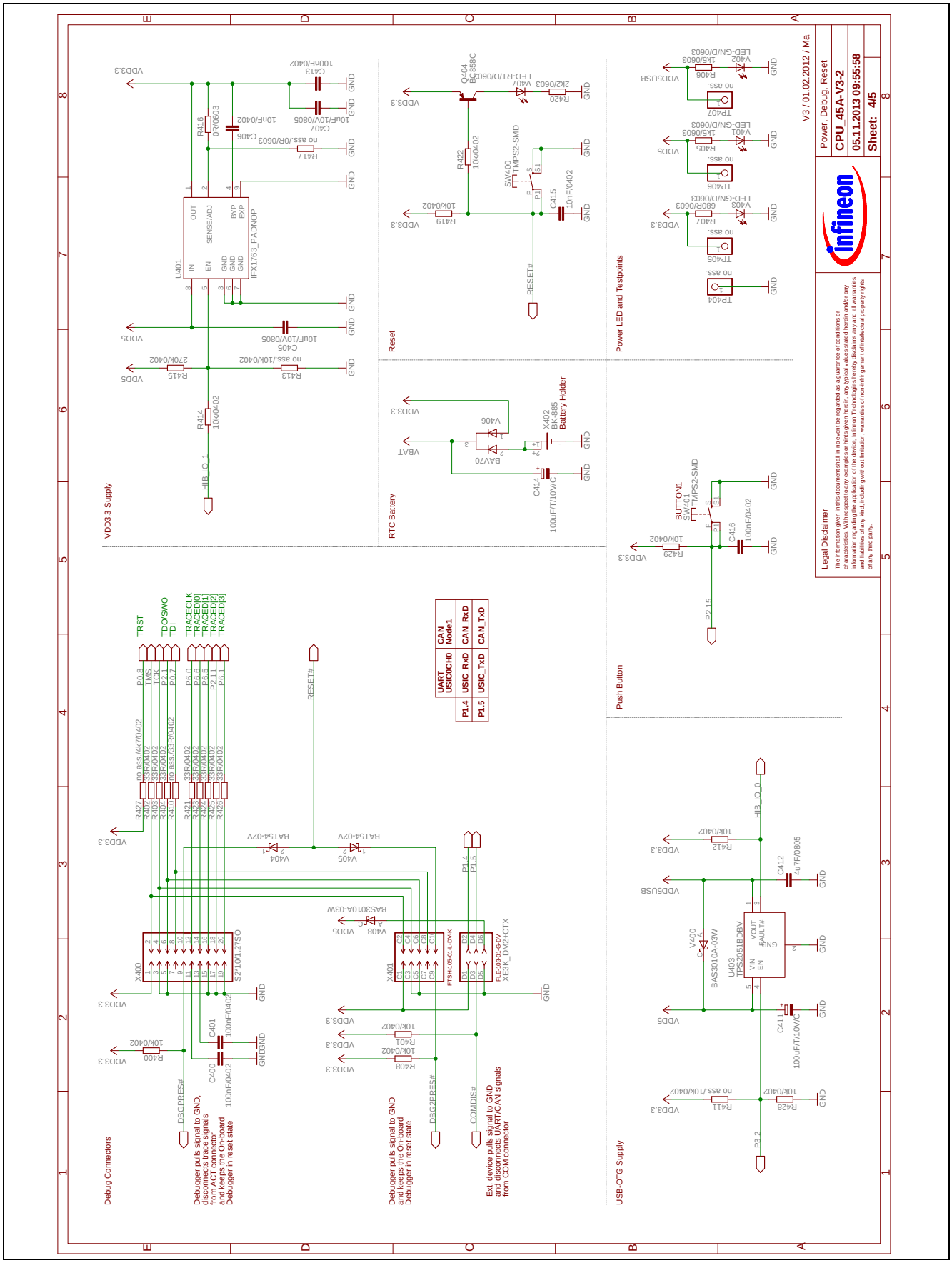

Figure 28 Schematic of Power Supply, Debug Connectors, Reset Circuit

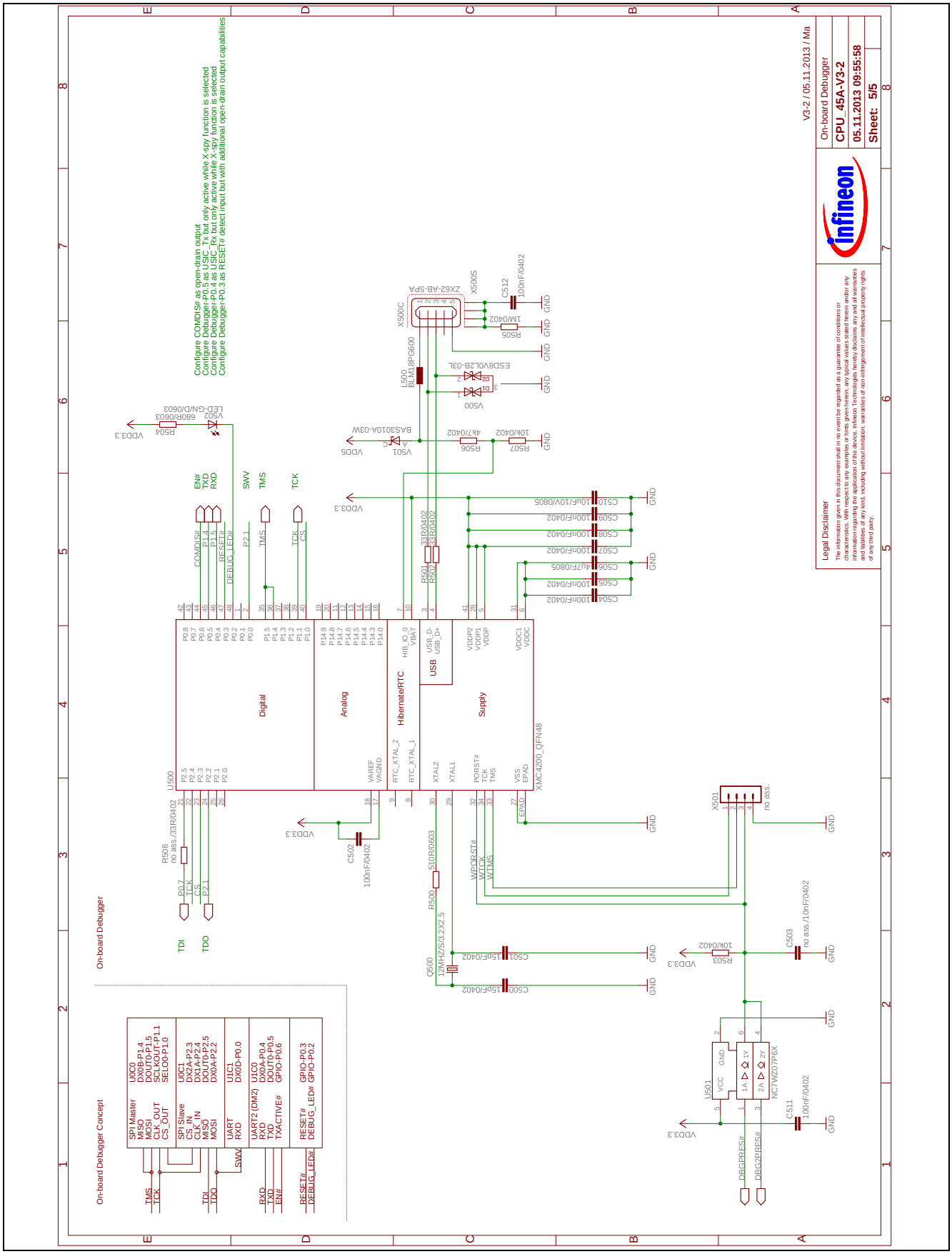

Figure 29 Schematic of On-board Debugger

4.2 Component Placement and Geometry

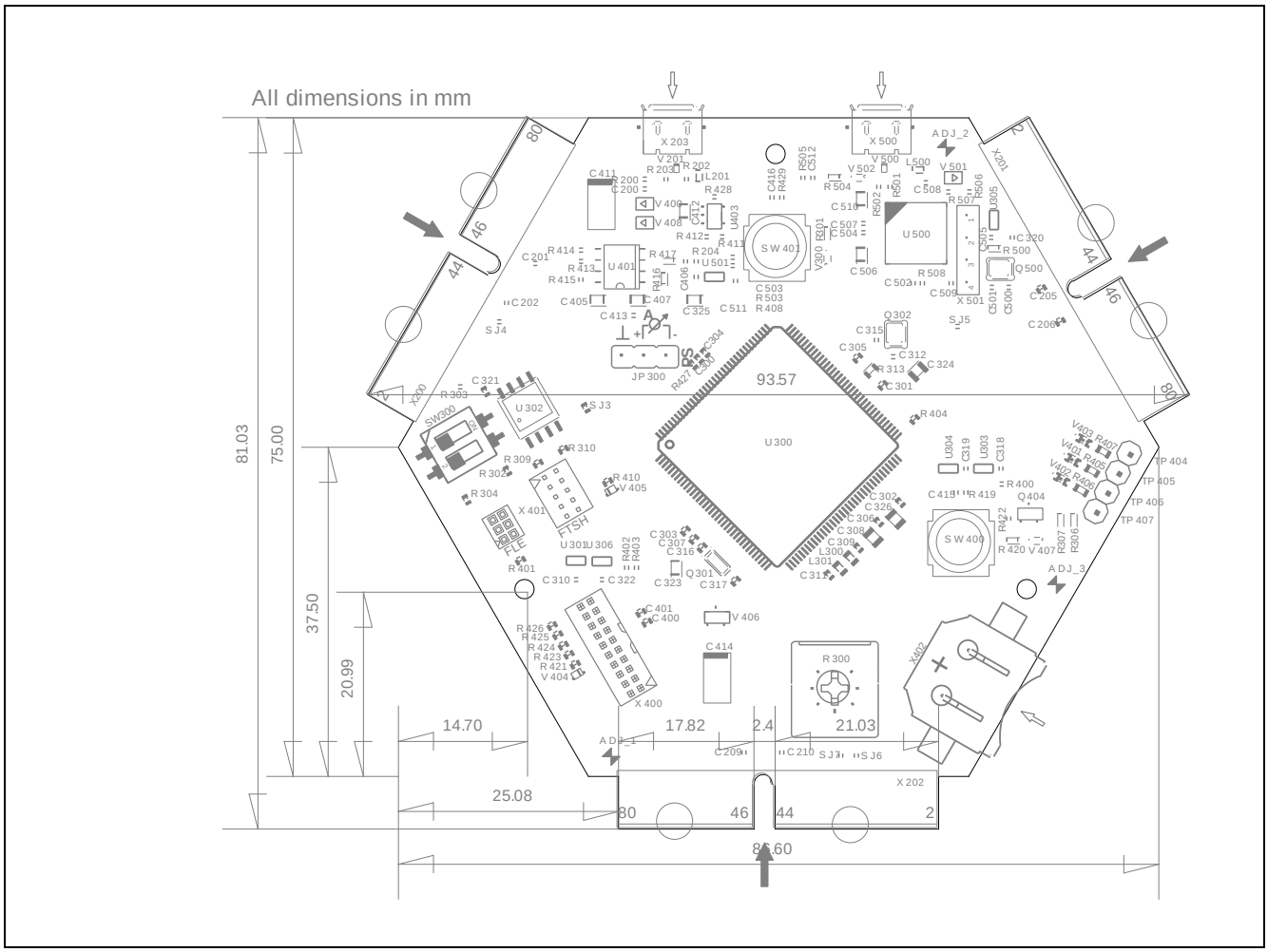

Figure 30 Component Placement and Geometry

4.3 Bill of Material (BOM)

Table 12 BOM of CPU_45A-V3 Board

Pos. No.	Qty	Value	Device	Reference Des.
1	1	0R/0603	Resistor	R416
2	2	1M/0402	Resistor	R200, R505
3	2	1k5/0603	Resistor	R405, R406
4	3	2k2/0603	Resistor	R306, R307, R420
5	3	4k7/0402	Resistor	R302, R304, R506
6	1	4u7F/0805	Capacitor, ceramic 10% X7R	C412, C506
7	15	10k/0402	Resistor	R204, R303, R309, R310, R400, R401, R408, R412, R414, R419, R422, R428, R429, R503, R507
8	2	10nF/0402	Capacitor	C406, C415
9	9	10uF/10V/0805	Capacitor ceramic	C308, C323, C324, C325, C326, C405, C407, C510
10	2	12MHZ/S/3.2X2.5	Crystal, NX3225GD, NDK	Q302, Q500
11	6	15pF/0402	Capacitor, ceramic 10% NP0	C312, C315, C316, C317, C500, C501
12	1	32.768kHz	Crystal, NX3215SA, NDK	Q301
13	12	33R/0402	Resistor	R202, R203, R402, R403, R404, R421, R423, R424, R425, R426, R501, R502
14	5	74LVC1G66DCK	IC, Single Analog Switch	U301, U303, U304, U305, U306
15	35	100nF/0402	Capacitor	C200, C201, C202, C205, C206, C209, C210, C300, C301, C302, C303, C304, C305, C306, C307, C309, C310, C311, C318, C319, C320, C321, C322, C400, C401, C413, C416, C502, C504, C505, C507, C508, C509, C511, C512
16	2	100uF/T/10V/C	Capacitor, bipolar	C411, C414
17	1	219-02	Dual DIP-Switch, 0.1" SMD	SW300
18	1	270k/0402	Resistor	R415
19	2	510R/0603	Resistor	R313, R500
20	3	680R/0603	Resistor	R301, R407, R504
21	3	BAS3010A-03W	Diode, SOD323, Infineon	V400, V408, V501
22	2	BAT54-02V	Diode, SC79, Infineon	V404, V405
23	1	BAV70	Diode, SOT23-3, Infineon	V406
24	1	BC858C	Transistor, SOT23-3, Infineon	Q404
25	1	BK-885	Battery Holder, 12mm Coin Cell	X402
26	4	BLM18PG600	Ferrite Bead, 0603, Murata	L201, L300, L301, L500
27	2	ESD8V0L2B-03L	Diode, TSLP-3-1, Infineon	V201, V500
28	3	FIDUCIAL	FIDUCIAL	ADJ_1, ADJ_2, ADJ_3
29	3	HSEC8_MATING-CARD	Connector, 80-pin Edgecard, Samtec	X200, X201, X202
30	1	IFX1763_PADNOP	Voltage Regulator, 3.3V LDO, Infineon	U401
31	1	LED-GE/D/0603	LED, yellow	V300

Table 12 BOM of CPU_45A-V3 Board

Pos. No.	Qty	Value	Device	Reference Des.
32	4	LED-GN/D/0603	LED, green	V401, V402, V403, V502
33	1	LED-RT/D/0603	LED, red	V407
34	1	NC7WZ07P6X	NC7WZ07_2P6X	U501
35	1	POTI/10K/VERT	Potentiometer, K09K1130A8G, ALPS	R300
36	1	S2*10/1.27SO	Connector, FTSH-110-01-L-DVK-P, Samtec	X400
37	1	N25Q032A13ESE40	IC, Serial SPI Flash, 32Mb	U302
38	2	TMPS2-SMD	Switch, tactile	SW400, SW401
39	1	TPS2051BDBV	IC, Power Switch	U403
40	1	XE3K_DM2+CTX	Connector, FTSH-105-01-LM-DVK, without pin 7, Samtec Connector, FLE-103-01-G-DV, Samtec	X401
41	1	XMC4200_QFN48	IC, XMC4200, QFN48, Infineon	U500
42	1	XMC4500_LQFP144	IC, XMC4500, LQFP144, Infineon	U300
43	2	ZX62-AB-5PA	Connector, Micro-USB, Hirose	X203, X500
44	1	no ass.	Pinheader, 4-pin, 0.1" TH	X501
45	4	no ass.	Pinheader, 1-pin, 0.1" TH	TP404, TP405, TP406, TP407
46	1	no ass./0R/0603	Resistor	R417
47	1	no ass./4k7/0402	Resistor	R427
48	2	no ass./10k/0402	Resistor	R411, R413
49	1	no ass./10nF/0402	Resistor	C503
50	2	no ass./33R/0402	Resistor	R410, R508
51	1	no ass.	Pinheader, 3-pin, 0.1" TH, Hitex PowerScale	JP300
52	5	0R/0402	Solder Jumper (0 Ohm)	SJ3, SJ4, SJ5, SJ6, SJ7

w w w . i n f i n e o n . c o m

Published by Infineon Technologies AG

Mouser Electronics

Authorized Distributor

Click to View Pricing, Inventory, Delivery & Lifecycle Information:

Infineon:

KIT_XMC45_AE1_002