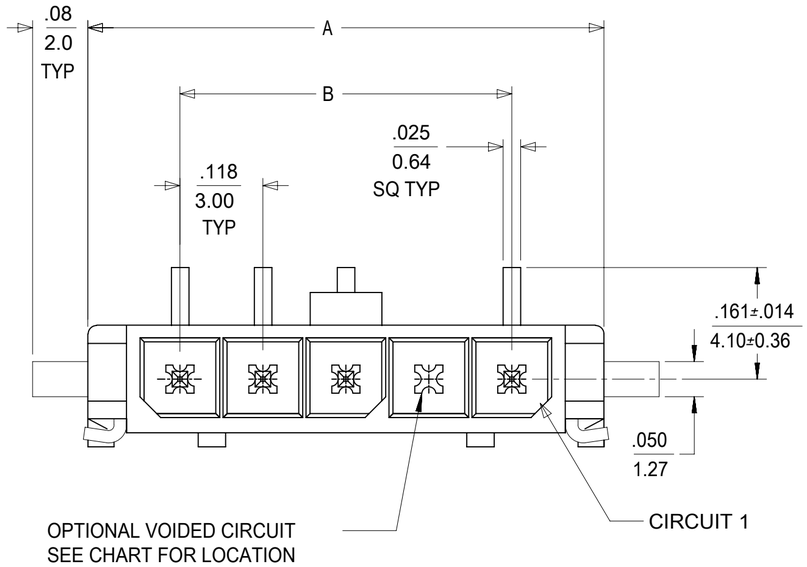

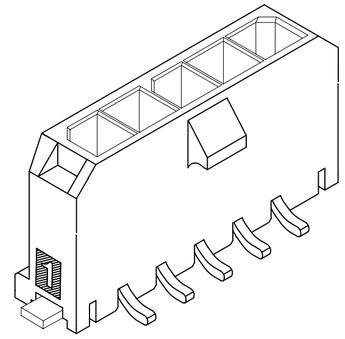

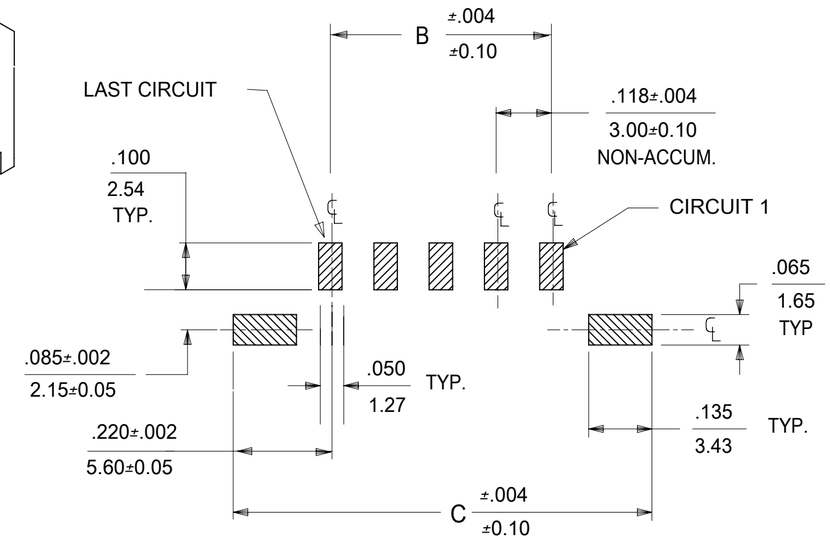

PCB LAYOUT: COMPONENT SIDE

CKTS	A	B	C
2	.380 / 9.65	.118 / 3.00	.559 / 14.20
3	.498 / 12.65	.236 / 6.00	.677 / 17.20
4	.616 / 15.65	.354 / 9.00	.795 / 20.20
5	.734 / 18.65	.472 / 12.00	.913 / 23.20
6	.852 / 21.65	.591 / 15.00	1.031 / 26.20
7	.970 / 24.65	.709 / 18.00	1.150 / 29.20
8	1.089 / 27.65	.827 / 21.00	1.268 / 32.20
9	1.207 / 30.65	.945 / 24.00	1.386 / 35.20
10	1.325 / 33.65	1.063 / 27.00	1.504 / 38.20
11	1.443 / 36.65	1.181 / 30.00	1.622 / 41.20
12	1.561 / 39.65	1.299 / 33.00	1.740 / 44.20

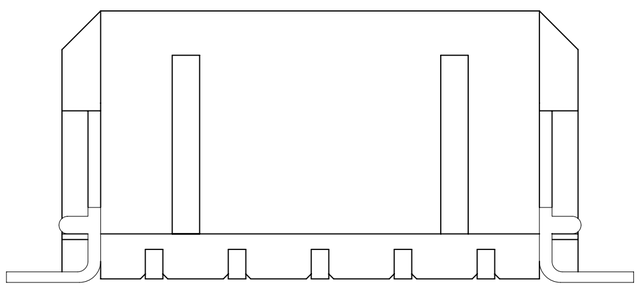

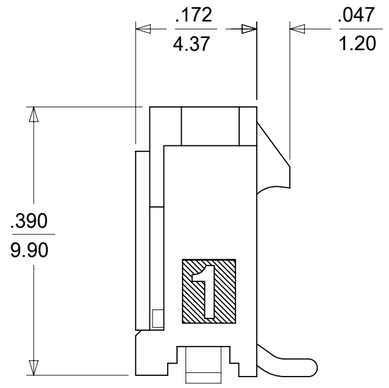

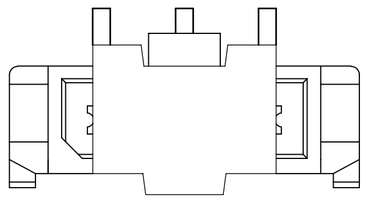

SHOWN WITH DISPOSABLE CAP
(FOR REMOVAL FROM TAPE & REEL PACKAGING)
SEE NOTE 4

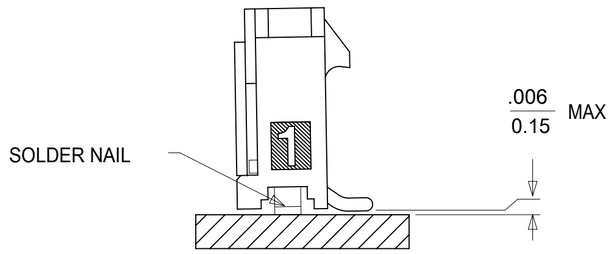

COPLANARITY DETAIL

SEE NOTE 6

	FINISH A	VOID CKTS	FINISH B	VOID CKTS	FINISH C	VOID CKTS
CKTS	MATERIAL NO:		MATERIAL NO:		MATERIAL NO:	
02	43650-0224		43650-0225		43650-0226	
03	43650-0324		43650-0325		43650-0326	
04	43650-0424		43650-0425		43650-0426	
05	43650-0524		43650-0525		43650-0526	
06	43650-0624		43650-0625		43650-0626	
07	43650-0724		43650-0725		43650-0726	
08	43650-0824		43650-0825		43650-0826	
09	43650-0924		43650-0925		43650-0926	
10	43650-1024		43650-1025		43650-1026	
11	43650-1124		43650-1125		43650-1126	
12	43650-1224		43650-1225		43650-1226	
03	43650-0350	2				
06	43650-0650	3,5				

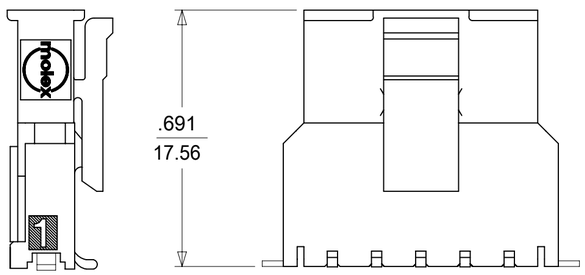

MATED MICRO FIT CONNECTORS

NOTES:

1. HOUSING MATERIAL: LIQUID CRYSTAL POLYMER, GLASS FILLED, UL94V-0, COLOR: BLACK
   TERMINAL MATERIAL: BRASS ALLOY
2. FINISH: A = .000060/(0.00152) MIN. REFLOWED MATTE TIN OVER
   .000050/(0.00127) MIN. NICKEL PLATE
   (FINISH IS BRIGHT IN APPEARANCE, THICKNESS AS APPLIED PRIOR TO REFLOW)

   B = .000015/(0.00038) MIN. SELECT GOLD IN CONTACT AREA
   .000100/(0.00254) MIN. SELECT MATTE TIN ON SOLDER TAILS
   BOTH OVER .000050/(0.00127) NICKEL OVERALL

   C = .000030/(0.00076) MIN. SELECT GOLD IN CONTACT AREA
   .000100/(0.00254) MIN. SELECT MATTE TIN ON SOLDER TAILS
   BOTH OVER .000050/(0.00127) NICKEL OVERALL
3. PRODUCT SPECIFICATION: PS-43650
4. TAPE & REEL PACKAGED (WITH DISPOSABLE CAP) PER MOLEX DRAWING 436500002-PK
5. MATES WITH MICRO FIT (3.0) RECEPTACLE SERIES 43645
6. THE COPLANARITY DIMENSION IS ESTABLISHED BY PLACING THE ASSEMBLY ON A FLAT SURFACE. THE DISTANCE FROM THAT SURFACE TO THE BOTTOM OF ANY TERMINAL OR NAIL MUST NOT EXCEED .006/0.15
7. PARTS CONFORM TO CLASS 'B' REQUIREMENTS OF COSMETIC SPECIFICATION PS-45499-002.
8. TEXT ON PART IS FOR REFERENCE ONLY. TEXT AND TEXT LOCATION MAY VARY DEPENDING ON PART NUMBER AND/OR TOOL.

DOCUMENT STATUS	P1	RELEASE DATE	2018/04/27 21:51:22

SYMBOLS: = 0

THIS DRAWING CONTAINS INFORMATION THAT IS PROPRIETARY TO MOLEX ELECTRONIC TECHNOLOGIES, LLC AND SHOULD NOT BE USED WITHOUT WRITTEN PERMISSION

DIMENSION UNITS: IN/MM
SCALE: NTS

GENERAL TOLERANCES (UNLESS SPECIFIED)

	MM	INCH
4 PLACES	±	±
3 PLACES	±	± 0.01
2 PLACES	± 0.25	± 0.014
1 PLACE	± 0.36	±
0 PLACES	±	±
ANGULAR TOL	± 0.5 °	

DRAFT WHERE APPLICABLE MUST REMAIN WITHIN DIMENSIONS

CURRENT REV DESC: UPDATE NOTE 4

EC NO: 172616
DRWN: ANESSER 2018/02/21
CHK'D: SSOUSEK 2018/04/25
APPR: FSMITH 2018/04/27

INITIAL REVISION:
DRWN: SAMIEC 2000/07/07
APPR: FSMITH 2010/12/03

THIRD ANGLE PROJECTION | DRAWING: C-SIZE | SERIES: 43650

molex

MICRO-FIT (3.0) VERTICAL SMT NAILS
SINGLE ROW / TAPE AND REEL

PRODUCT CUSTOMER DRAWING

DOCUMENT NUMBER	DOC TYPE	DOC PART	REVISION
SD-43650-009	PSD	001	E4

MATERIAL NUMBER	CUSTOMER	SHEET NUMBER
SEE CHART	GENERAL MARKET	1 OF 1

FORMAT: Eng-lega-master-tb-prod-C
REVISION: D
DATE: 2018/01/18