DRAWING MADE IN THIRD ANGLE PROJECTION

/home/us024474/newdesign

PART NUMBER	REV	FIRST USED
1385794-1	A	122500-1
1385794-2	A	565435-5
1385794-3	A	354500-1

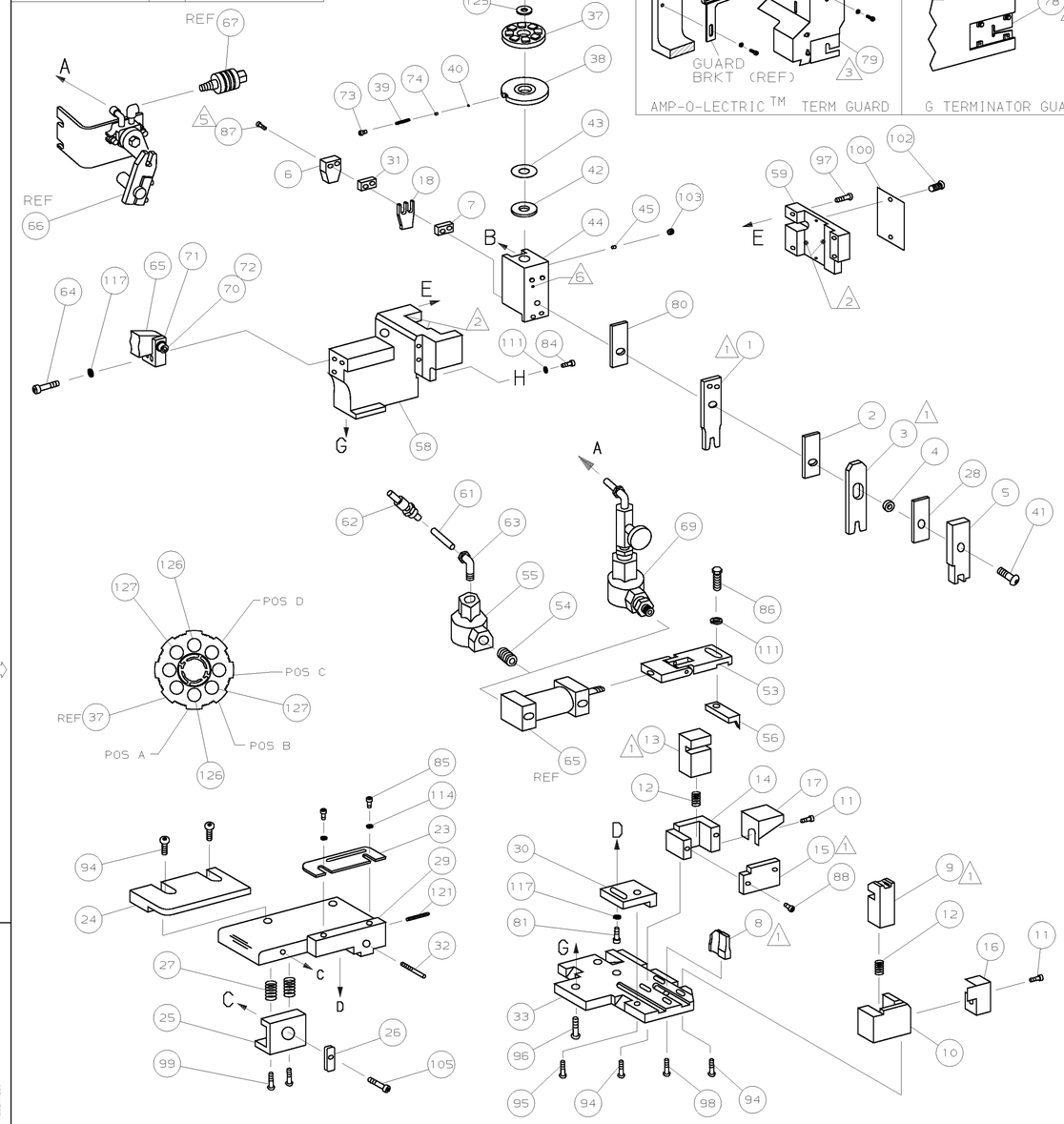

1. RECOMMENDED SPARE PARTS.
2. GREASE LIGHTLY.
3. GUARD MUST BE IN PLACE WHEN OPERATING APPLICATOR IN A BENCH MACHINE.
4. SEE DRAWING FOR COMPONENTS
5. CUT TO LENGTH AT ASSEMBLY.
6. REMOVE PIN AT ASSEMBLY.

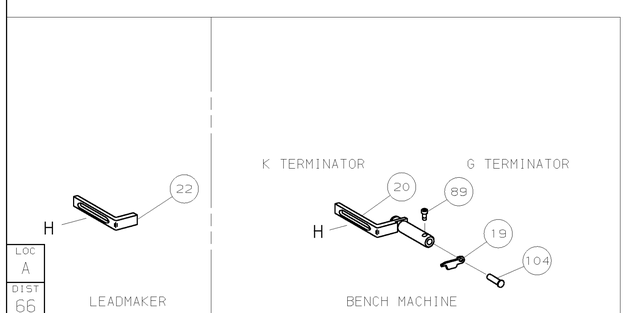

TERMINAL NAME: TERMINAL

AMP TERM PN	MFR TERM PN
1572536	12040902

PACKARD TERMINAL AMP CRIMP SPECS

PAD LTR	CRIMP HEIGHT	WIRE SIZE
A	.037 ±.002 [0.94 ±0.05mm]	0.5mm²
B	.031 ±.002 [0.79 ±0.05mm]	0.35mm²
C	NOT	USED
D	NOT	USED

CRIMP	SIZE	TYPE	RANGE
WIRE	.070 [1.78mm]	F	0.35-0.5mm²
INSUL	.080 [2.03mm]	F	.070 MAX

WIRE STRIP LENGTH	TERM APPL SPEC	FEED	APPL INSTRUCTION	SET UP GAGE	LAYOUT
.193-.209	NONE	.403	408-8040	458637-1	L3014

-3	-2	-1	U/M	DWG SIZE	PART NO	DESCRIPTION	ITEM NO
							129
							128
2	2	2	-	C	6-354779-8	PIN, WIRE DISC (.3330)B	127
2	2	2	-	C	5-354779-3	PIN, WIRE DISC (.3255)A	126
1	1	1	-	A	986950-1	WASHER, FLAT PRECISION	125
1	1	1	-	A	217238-1	GENERAL INSTRUCTION PACKAGE	124
1	1	1	-	-	4088040	SF APPL INST 408-8040	123
							122
1	1	1	-	A	4-21028-0	PIN,SLT SPR(ø.093x.75)ST GDE PL	121
							120
							119
							118
3	3	3	-	A	21024-5	WASHER, LOCK(#10)ADJ BLOCK	117
							116
							115
2	2	2	-	A	21024-2	WASHER,LOCK(#4)FRONT STP GUIDE	114
							113
							112
2	2	2	-	A	21024-4	WASHER,LOCK(#8)STRIPPER	111
							110
							109
							108
							107
							106
1	1	1	-	A	22353-8	SCR,SHLD(ø.187x.25)DRAG LEVER	105
1	1	-	-	A	992031-1	PIN, CLEVIS	104
1	1	1	-	A	21009-2	SCR,SKT SET(1/4-20x.25 LW)RAM	103
2	2	2	-	A	21017-2	SCR,DRIVE(#2x.19)ID PLATE	102
							101
1	1	1	-	B	461264-1	PLATE, IDENTIFICATION	100
2	2	2	-	A	3-21002-0	SCR,BHC(10-32x.88)DRAG	99
1	1	1	-	A	22733-8	SCR,BHC(8-32x.38 LW)ANVIL	98
4	4	4	-	A	2-21002-9	SCR,BHC(10-32x.75)CAP	97
3	3	3	-	A	2-22733-8	SCR,BHC(1/4-20x.62)H5G	96
1	1	1	-	A	2-21002-7	SCR,BHC(10-32x.50)SG ADJ BLK	95
6	6	6	-	A	2-21002-2	SCR,BHC(8-32x.50)TERM H DWN	94
							93
							92
							91
							90
1	1	-	-	A	7-21000-9	SCR,SHC(4-40x.19)STRIPPER	89
2	2	2	-	A	1-21000-8	SCR,SHC(6-32x.25)R SHEAR PLATE	88
2	2	2	-	A	3-21000-2	SCR,SHC(8-32x1.23)DEP-HOLD	87
1	1	1	-	A	2-22603-1	SCR,HEX HD(8-32x.38)FEED FINGER	86
2	2	2	-	A	1-21000-3	SCR,SHC(4-40x.25)FR ST GUIDE	85
1	1	1	-	A	2-21000-7	SCR,SHC(8-32x.50)STRIPPER	84
							83
							82
1	1	1	-	A	3-21000-4	SCR,SHC(10-32x.38)SG ADJ BL	81
1	1	1	-	C	1-455888-0	SPACER, CRIMPER	80
-	1	-	-	B	462992-7	GUARD ASSY	79
REF	-	-	-	B	679532-1	INSERT, GUARD	78
							77
							76
							75
1	1	1	-	A	690603-1	SPRING, ASSIST	74
1	1	1	-	A	23030-1	SCR,SHC(6-32x.25 SL)INS DISC	73
1	1	1	-	A	3-21001-5	SCR,SHC(3/8-16X1.00)AIR FEED	72
1	1	1	-	B	459610-3	MOUNT, FEED BRACKET	71

QTY REQD PER ASSY — PARTS LIST

-1	-2	-3				
LEADMAKER	BENCH MODEL K	BENCH MODEL G			AIRFEED	
1	1	1	-	A	21024-8	WASHER, LOCK 3/8
-	1	-	-	C	692655-5	AIR FEED VALVE ASSY
-	REF	-	-	A	24042-2	VALVE, SHUT OFF
-	REF	-	-	C	692655-6	AIR FEED VALVE ASSY
1	1	1	-	B	461065-1	AIR FEED ASSY (1 INCH)
2	2	2	-	A	3-21000-9	SCR,SHC(10-32x1.00)AIR ASSY
1	-	1	-	A	980285-2	ELBOW, SWIVEL 1/8 NPT - 1/4 T
1	-	1	-	A	23238-1	QUICK DISCONNECT
21.00	-	21.00	IN	A	27319-4	TUBING, POLY-FLO ø.25
1	1	1	-	C	454220-1	CAP, RAM
1	1	1	-	D	454485-1	HOUSING
1	1	1	-	B	458537-2	PAWL, FEED
1	-	1	-	A	22374-7	VALVE, QUICK EXHAUST
1	-	1	-	A	22304-1	NIPPLE, HEX
1	1	1	-	B	461062-2	FEED FINGER ASSY
1	1	1	-	A	690191-1	PLUG, NYLON
1	1	1	-	C	455673-5	RAM
1	1	1	-	A	690125-1	WASHER, LAMINATED
1	1	1	-	A	690124-1	WASHER, RAM
1	1	1	-	A	7-21002-9	BOLT, CRIMPER(5/16x1.00)
1	1	1	-	A	23241-6	BALL, STEEL
1	1	1	-	A	690170-1	SPRING, COMPRESSION
1	1	1	-	C	690142-1	DISC, INSULATION
1	1	1	-	D	354777-1	DISC, WIRE
1	1	1	-	A	22480-5	WASHER, SPRING
1	1	1	-	B	690212-1	POST, RAM
1	1	1	-	D	455675-9	PLATE, BASE
1	1	1	-	A	690432-3	SCREW, ADJUSTMENT
1	1	1	-	C	5-240641-6	SPACER, DEPRESSOR (REAR)
1	1	1	-	B	455689-1	BLOCK, STRIP GUIDE ADJ
1	1	1	-	C	458144-6	PLATE, STRIP GUIDE
1	1	1	-	C	1-455888-0	SPACER, FRONT SHEAR DEP
2	2	2	-	A	1-22284-0	SPRING, DRAG
1	1	1	-	B	240793-1	LEVER, DRAG RELEASE
1	1	1	-	B	240792-1	DRAG, TERMINAL
1	1	1	-	D	4-90765-4	GUIDE, STRIP (REAR)
1	1	1	-	A	690438-1	GUIDE, STRIP (FRONT)
-	-	1	-	B	690472-2	STRIPPER
1	1	-	-	A	679218-1	STRIPPER WIRE STOP ASSY
1	1	-	-	B	458949-1	STRIPPER
1	1	1	-	B	690518-1	HOLDER, TERMINAL
1	1	1	-	A	691668-1	GUARD, CHIP (REAR)
1	1	1	-	B	318563-1	GUARD, CHIP, FRONT
1	1	1	-	B	690464-1	PLATE, SHEAR (REAR)
1	1	1	-	B	690462-1	HOLDER, SHEAR (REAR)
1	1	1	-	C	690463-1	SHEAR, FLOAT (REAR)
2	2	2	-	A	5-22280-0	SPRING, SHEAR
2	2	2	-	B	690461-1	STOP, SHEAR
1	1	1	-	C	690459-1	HOLDER, SHEAR (FRONT)
1	1	1	-	C	462006-7	SHEAR, FLOAT (FRONT)
1	1	1	-	C	2-904717-8	ANVIL
1	1	1	-	C	5-240641-3	SPACER, DEPRESSOR (REAR)
1	1	1	-	A	1-690468-4	DEPRESSOR, SHEAR (REAR)
1	1	1	-	C	4-455889-8	DEPRESSOR, SHEAR (FRONT)
1	1	1	-	B	2-238011-2	SPACER, BLOCK CRIMPER
1	1	1	-	C	5-456134-4	CRIMPER, INSULATION
1	1	1	-	C	455888-8	SPACER, CRIMPER
1	1	1	-	C	3-456404-9	CRIMPER, WIRE

-3	-2	-1	U/M	DWG SIZE	PART NO	DESCRIPTION	ITEM NO

REVISION OF EACH ASSY NO (WHEN BLANK, USE DWG REVISION)

QTY REQD PER ASSY — PARTS LIST

P	F	LTR	REVISION RECORD	APP	DATE
		A	RELEASED	RK	AUG04

DIMENSIONS IN INCHES. DO NOT SCALE PRINT.
TOLERANCES UNLESS OTHERWISE SPECIFIED:
2 PLC DEC ±.25
3 PLC DEC ±-
4 PLC DEC ±-
ANGLES ± -
SURF TEXTURE: √
REMOVE BURRS, BREAK SHARP EDGES R.015 MAX

MATL – | HT TR – | FIN –

DR 30JUL04 R. KNEPPER | APP 30JUL04 T.ELBIN
CHK 02AUG04 G.BAILEY | REL 02AUG04 R. KNEPPER

AMP — Tyco Electronics, Harrisburg, PA 17105-3608

NAME SIDE FEED HDM APPLICATOR | MACHINE REF MINI APPL

SCALE – | D | DWG NO 1385794 | SHEET 1 OF 1 | REV A

CAGE CODE 00779 | CUSTOMER AND ASSEMBLY DRAWING | RESTRICTED TO –

LOC A | DIST 66

THIS DRAWING IS A CONTROLLED DOCUMENT.
THIS DRAWING IS UNPUBLISHED. © COPYRIGHT 20 BY AMP INCORPORATED. ALL RIGHTS RESERVED. RELEASED FOR PUBLICATION .20

Mouser Electronics

Authorized Distributor

Click to View Pricing, Inventory, Delivery & Lifecycle Information:

TE Connectivity:

1385794-2