THIS DRAWING IS UNPUBLISHED. RELEASED FOR PUBLICATION -,- .
© COPYRIGHT - BY TYCO ELECTRONICS CORPORATION. ALL RIGHTS RESERVED.

LOC	DIST
FT	0

REVISIONS

P	LTR	DESCRIPTION	DATE	DWN	APVD
	C	REVISED PER ECO-10-004812	04MAY10	HMR	CR

MATERIALS:
HOUSING: THERMOPLASTIC, UL94V-0, BLACK.
TERMINAL: BRIGHT TIN OVER COPPER ALLOY.
SCREWS: 8-32, ZINC PLATED STEEL.

ELECTRICAL:
CURRENT RATING: 30A
VOLTAGE RATING: 600V
WIRE RANGE: 10-18 AWG (UL)
10-22 AWG (CSA)

MECHANICAL:
RECOMMENDED TORQUE: 20 IN-LB.
OPERATING TEMP.: -40°C TO +120°C MAX.

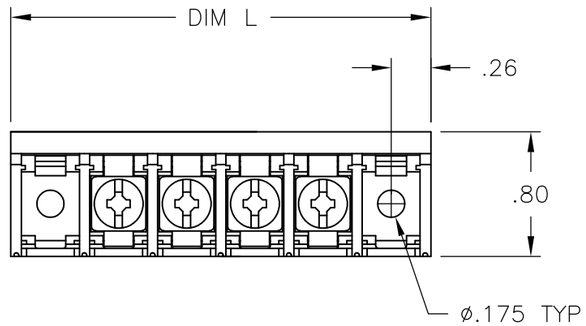

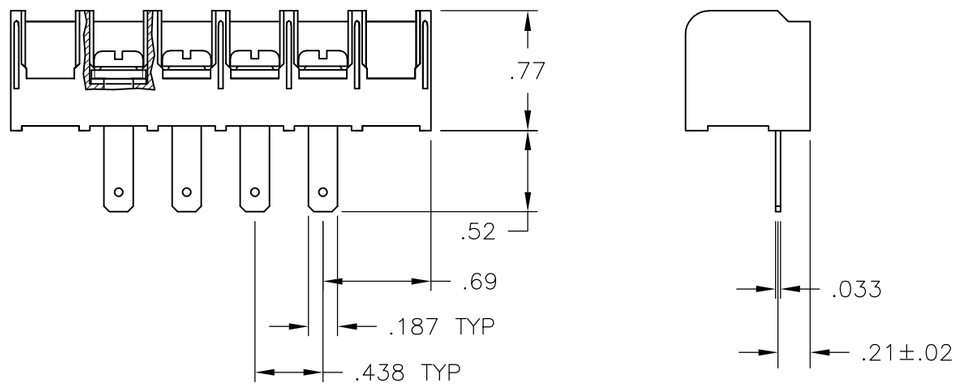

DIM L	NO OF POS	CATALOG NUMBER	TE NUMBER
8.823	18	8QCV-18-006	1-1546584-8
8.385	17	8QCV-17-006	1-1546584-7
7.948	16	8QCV-16-006	1-1546584-6
7.510	15	8QCV-15-006	1-1546584-5
7.073	14	8QCV-14-006	1-1546584-4
6.635	13	8QCV-13-006	1-1546584-3
6.198	12	8QCV-12-006	1-1546584-2
5.760	11	8QCV-11-006	3-1437659-1
5.323	10	8QCV-10-006	3-1437659-0
4.885	9	8QCV-09-006	1546584-9
4.448	8	8QCV-08-006	9-1546159-9
4.010	7	8QCV-07-006	1546584-7
3.573	6	8QCV-06-006	9-1546159-8
3.135	5	8QCV-05-006	2-1437659-2
2.698	4	8QCV-04-006	2-1437659-0
2.260	3	8QCV-03-006	9-1546159-5
1.823	2	8QCV-02-006	1-1437659-1

THIS DRAWING IS A CONTROLLED DOCUMENT.

DIMENSIONS: INCHES

TOLERANCES UNLESS OTHERWISE SPECIFIED:
0 PLC ± -
1 PLC ± -
2 PLC ± .01
3 PLC ± .005
4 PLC ± -
ANGLES ± 1°

MATERIAL -
FINISH -

DWN S SCHLEGEL 10/25/06
CHK S YODER 10/25/06
APVD S YODER 10/25/06
PRODUCT SPEC —
APPLICATION SPEC —
WEIGHT —

Tyco Electronics
Tyco Electronics Corporation
Harrisburg, PA 17105-3608

NAME 8QCV-XX-006 ASSEMBLY

SIZE A3 | CAGE CODE 00779 | DRAWING NO C-1-1437659-1 | RESTRICTED TO —

CUSTOMER DRAWING | SCALE 1:1 | SHEET 1 OF 1 | REV C

Mouser Electronics

Authorized Distributor

Click to View Pricing, Inventory, Delivery & Lifecycle Information:

TE Connectivity:
8QCV-06-006