THIS DRAWING IS UNPUBLISHED. RELEASED FOR PUBLICATION - ,N/A .
© COPYRIGHT N/A By - ALL RIGHTS RESERVED.

LOC	DIST
—	—

REVISIONS

P	LTR	DESCRIPTION	DATE	DWN	APVD
	T	REV PER ECO 15-016251	11-12-13	CT	CD

1. THIS RECEPTACLE WILL MATE WITH ANY 36C4, SIZE 5 PLUG IN AMPLIMITE SERIES.
2. MAXIMUM WIRE INSULATION TO BE USED WITH THIS RECEPTACLE IS ø.072.
3. THIS CONNECTOR ACCEPTS (4) POWER 8, OR COAX SOCKET CONTACTS IN POSITIONS A1 THRU A4, PURCHASED SEPARATELY.
4. THIS CONNECTOR ACCEPTS SIZE 20 SOCKET CONTACTS IN POSITIONS 1 THRU 32, PURCHASED SEPARATELY.

5. UL/CSA DESIGNATION STAMPED IN THIS AREA, OPTIONAL.
6. MATERIAL: STEEL PER ASTM-A-109.
7. MATERIAL: BRASS PER MIL-C-50 AND ASTM-B-36 UNS NO. C26000.
8. FINISH: CADMIUM PLATED PER QQ-P-416, TYPE II, CLASS 2.
9. FINISH: GOLD PER MIL-G-45204 TYPE II, GRADE C, CLASS 1 OVER COPPER PER MIL-C-14550, CLASS IV.
10. FINISH: TIN PER ASTM-B-545 .000200 MIN THK OVER COPPER PER AMS2418 .000100-.000200 THK.
11. FINISH: ZINC PLATE PER ASTM-B-633 .000200-.000400 THK WITH SUPPLEMENTARY CHROMATE (Cr3+).

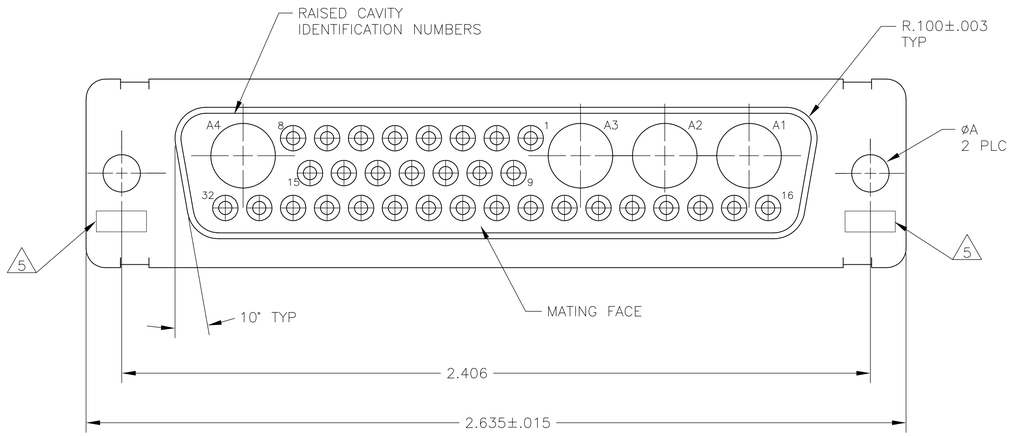

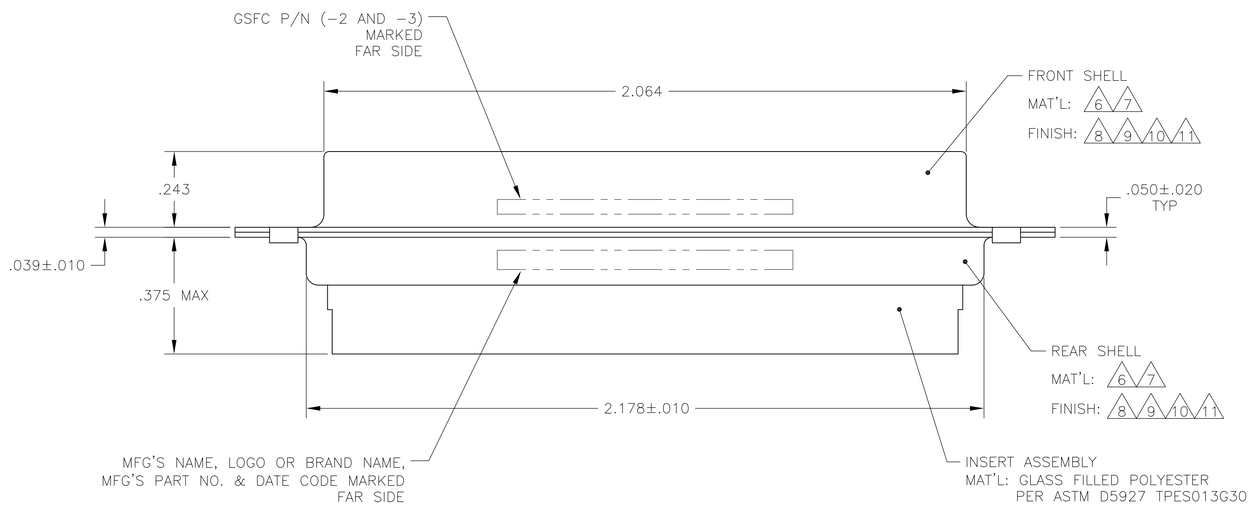

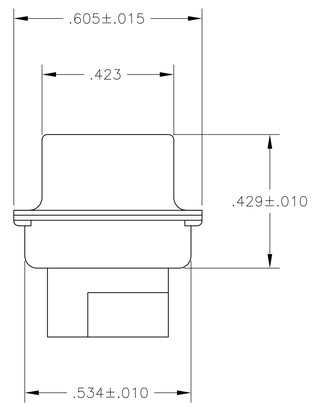

REMARKS	ØA	GSFC P/N	PART NO.
6 10	.120	–	5-208550-4
6 11	.120	–	5-208550-1
6 10	.120	–	208550-4
7 9	.154	311P405-23S-B-15	208550-3
7 9	.120	311P405-23S-B-12	208550-2
6 8	.120	–	208550-1

THIS DRAWING IS A CONTROLLED DOCUMENT.

DIMENSIONS: INCHES

TOLERANCES UNLESS OTHERWISE SPECIFIED:
0 PLC ± –
1 PLC ± –
2 PLC ± –
3 PLC ± .005[0.13]
4 PLC ± –
ANGLES ± 0°,30'

MATERIAL –
FINISH –

DWN T. SHUEY 07-JAN-88
CHK A.EMADI 27-JAN-88
APVD A.EMADI 27-JAN-88
PRODUCT SPEC —
APPLICATION SPEC —
WEIGHT —

TE Connectivity

NAME RECEPTACLE ASSEMBLY AMPLIMITE 36C4 SIZE 5, COAX MIX

SIZE	CAGE CODE	DRAWING NO	RESTRICTED TO
A1	00779	C-208550	—

CUSTOMER DRAWING SCALE 4:1 SHEET 1 OF 1 REV T

4805 (3/11)

Mouser Electronics

Authorized Distributor

Click to View Pricing, Inventory, Delivery & Lifecycle Information:

TE Connectivity:

5-208550-4