THIS DRAWING IS UNPUBLISHED. RELEASED FOR PUBLICATION -,- .
© COPYRIGHT - By - ALL RIGHTS RESERVED.

REVISIONS

P	LTR	DESCRIPTION	DATE	DWN	APVD
	K4	REVISED PER ECO-15-016493	28NOV2015	NK	DR

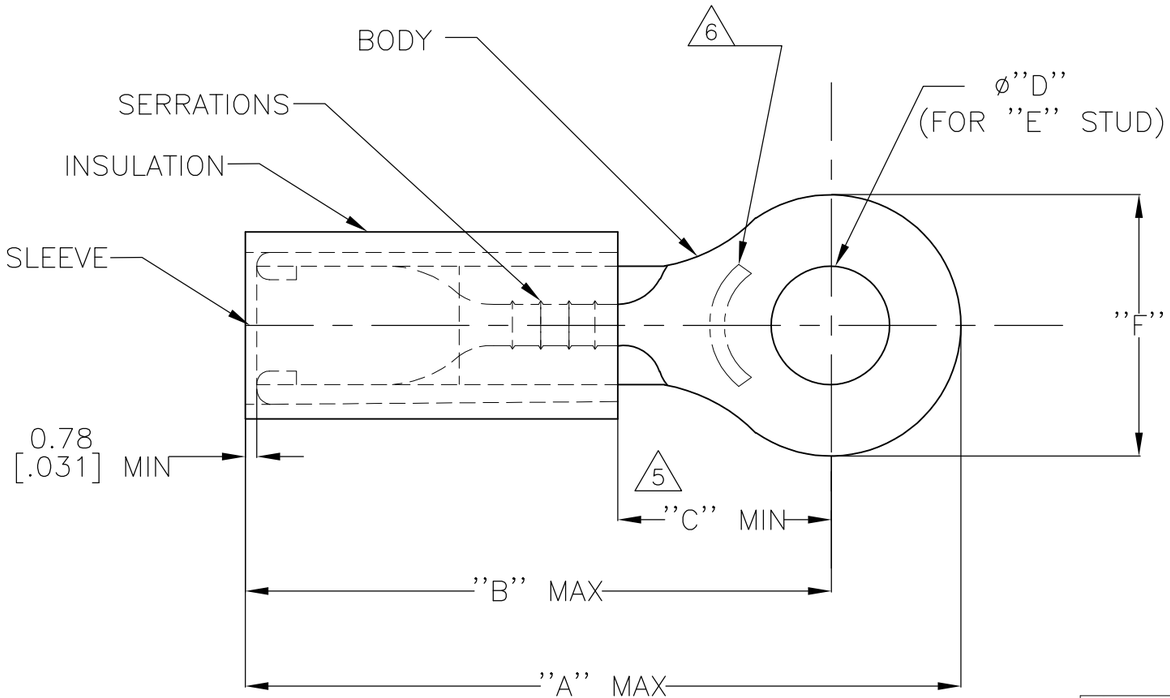

1 BODY: COPPER ASTM B152
GOLD PL ASTM B488 TYPE 1, CODE C
0.0012[.00005] MIN EXT THK OVER NICKEL PLATE
SAE AMS QQ-N-290 0.00076 [.00003] AVG THK
SLEEVE: COPPER ASTM B152
NICKEL PL SAE AMS QQ-N-290
0.00076 [.00003] AVG EXT. THK

2 FOR 2.03[.080] TO 3.81[.150] WIRE INSULATION DIA.

3 TONGUE MATERIAL THK: 0.78±0.05 [.031±.002]

4 PRELIMINARY - NOT RELEASED FOR PRODUCTION

5 DIMENSION APPLIES FROM EDGE OF METAL WIRE BARREL TO CENTER OF STUD HOLE

6 STAMP "AMP 14" APPROX AS SHOWN

PART NO.	"A"	"B"	"C"	"D"	"E"	"F"
4 332438-1	17.85 [.703]	14.60 [.575]	4.34 [.171]	.145±.003	M3.5 [#6]	6.35 [.250]
1-332438-0				.145±.003		

QTY	PACKAGE TYPE	PART NO.	INSULATION MATERIAL
PRELIMINARY 1000	LOOSE PIECE	332438-1	PVDF COLOR: WHITE
1000	LOOSE PIECE	1-332438-0	PTFE (ASTM D3295) COLOR: WHITE

AMP INCORPORATED
CUSTOMER SERVICE SYSTEMS

FOR ADDITIONAL PRODUCT INFORMATION OR COPIES OF DRAWINGS AND TECHNICAL DOCUMENTS	PRODUCT INFORMATION CENTER 1-800-522-6752
FOR APPLICATION TOOLING INFORMATION	TOOLING ASSISTANCE CENTER 1-800-722-1111
FOR ORDER ENTRY	1-800-526-5142

MAX RECOMMENDED OPERATING TEMPERATURE: 260°C [500°F]
VOLTAGE RATING: 300V MAX
CIRCULAR MIL AREA: 2.15mm²[4,234] STRANDED WIRE ONLY

THIS DRAWING IS A CONTROLLED DOCUMENT.

DIMENSIONS: mm [INCHES]

TOLERANCES UNLESS OTHERWISE SPECIFIED:
0 PLC ± -
1 PLC ± -
2 PLC ± 0.20 [.008]
3 PLC ± -
4 PLC ± -
ANGLES ± 5°

MATERIAL 1 SEE TABLE
FINISH 1 SEE TABLE

DWN NAGALAKSHMI K 01DEC2015
CHK MERCURIO MAURIZIO 01DEC2015
APVD MERCURIO MAURIZIO 01DEC2015
PRODUCT SPEC —
APPLICATION SPEC —
WEIGHT —

TE Connectivity

NAME
WIRE TERMINAL
PIDG, STRATO-THERM, RING TONGUE
WIRE SIZE:14

SIZE	CAGE CODE	DRAWING NO	RESTRICTED TO
A3	00779	C-332438	—

CUSTOMER DRAWING | SCALE NTS | SHEET 1 OF 1 | REV K4

1470-19 (1/15)

Mouser Electronics

Authorized Distributor

Click to View Pricing, Inventory, Delivery & Lifecycle Information:

TE Connectivity:

1-332438-0