THIS DRAWING IS UNPUBLISHED. RELEASED FOR PUBLICATION - ,- .
© COPYRIGHT - By - ALL RIGHTS RESERVED.

LOC	DIST
AD	00

REVISIONS

P	LTR	DESCRIPTION	DATE	DWN	APVD
	V2	REVISED PER ECO-11-004587	11MAR11	RK	HMR

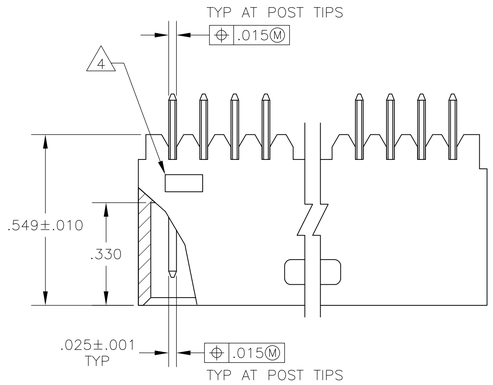

1. STANDOFFS:
   UP TO 9 POS-(2 REQD) ON THE OUTSIDE ENDS OF THE HOUSING.
   10 TO 19 POS-(3 REQD) TWO ON THE OUTSIDE ENDS AND ONE CENTERED ON THE HOUSING.

   19 POS AND ABOVE-(4 REQD) TWO ON THE OUTSIDE ENDS AND TWO SPACED EVENLY WITHIN THE REMAINING LENGTH OF THE HOUSING.
2. FOR 3 POS. ONLY, ONE SLOT (.215 WIDE).
3. INDICATED PARTS ARE PACKAGED IN "GANG-OF-TUBES".
4. RECESSED DATE CODE
5. .000100-.000200 BRIGHT TIN-LEAD OVER .000050 NICKEL.
6. .000100-.000200 BRIGHT TIN OVER .000050 NICKEL.
7. PRELIMINARY PART
8. .000100-.000200 MATTE TIN OVER .000050 NICKEL.
9. OBSOLETE PARTS: OBSOLETE CIS STREAMLINING PER D.RENAUD/D.SINISI

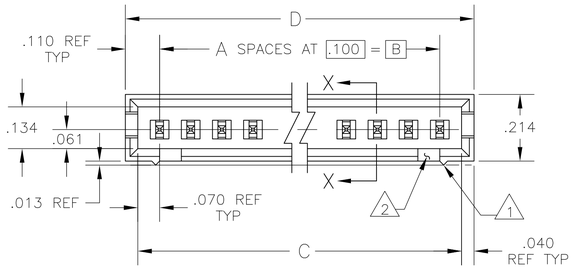

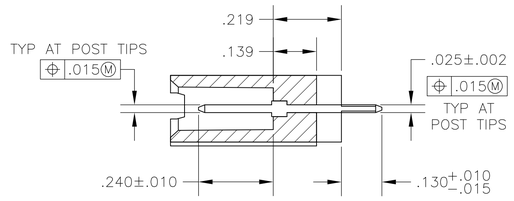

SECTION X-X

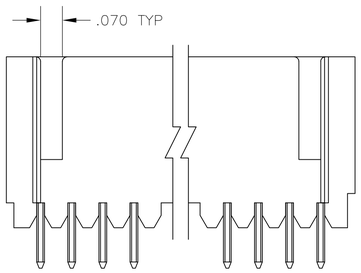

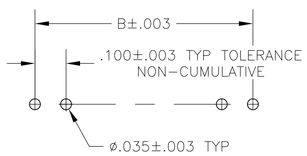

RECOMMENDED HOLE LAYOUT

	8	2.620	2.540	2.400	24	25	7-103080-3	
	8	2.520	2.440	2.300	23	24	7-103080-2	
	8	2.420	2.340	2.200	22	23	7-103080-1	
	8	2.320	2.240	2.100	21	22	7-103080-0	
	8	2.220	2.140	2.000	20	21	6-103080-9	
OBSOLETE 9	8	2.120	2.040	1.900	19	20	6-103080-8	
	8	2.020	1.940	1.800	18	19	6-103080-7	
	8	1.920	1.840	1.700	17	18	6-103080-6	
	8	1.820	1.740	1.600	16	17	6-103080-5	
	8	1.720	1.640	1.500	15	16	6-103080-4	
	8	1.620	1.540	1.400	14	15	6-103080-3	
	8	1.520	1.440	1.300	13	14	6-103080-2	
	8	1.420	1.340	1.200	12	13	6-103080-1	
	8	1.320	1.240	1.100	11	12	6-103080-0	
	8	1.220	1.140	1.000	10	11	5-103080-9	
	8	1.120	1.040	.900	9	10	5-103080-8	
	8	1.020	.940	.800	8	9	5-103080-7	
	8	.920	.840	.700	7	8	5-103080-6	
	8	.820	.740	.600	6	7	5-103080-5	
	8	.720	.640	.500	5	6	5-103080-4	
	8	.620	.540	.400	4	5	5-103080-3	
	8	.520	.440	.300	3	4	5-103080-2	
	8	.420	.340	.200	2	3	5-103080-1	
7	6	1.020	.940	.800	8	9	4-103080-0	
7	6	.520	.440	.300	3	4	3-103080-9	
7	6	.420	.340	.200	2	3	3-103080-8	
	6	.520	.440	.300	3	4	3-103080-7	
7	6	.620	.540	.400	4	5	3-103080-6	
3 OBSOLETE	5	.620	.540	.400	4	5	3-103080-5	
OBSOLETE	5	3.820	3.640	3.500	35	36	3-103080-4	
OBSOLETE	5	3.720	3.540	3.400	34	35	3-	-3
OBSOLETE	5	3.620	3.440	3.300	33	34	3-	-2
OBSOLETE	5	3.420	3.340	3.200	32	33	3-	-1
OBSOLETE	5	3.320	3.240	3.100	31	32	3-	-0
OBSOLETE	5	3.220	3.140	3.000	30	31	2-	-9
OBSOLETE	5	3.120	3.040	2.900	29	30	2-	-8
OBSOLETE	5	3.020	2.940	2.800	28	29	2-	-7
OBSOLETE	5	2.920	2.840	2.700	27	28	2-	-6
OBSOLETE	5	2.820	2.740	2.600	26	27	2-	-5
OBSOLETE	5	2.720	2.640	2.500	25	26	2-	-4
	5	2.620	2.540	2.400	24	25	2-	-3
	5	2.520	2.440	2.300	23	24	2-	-2
	5	2.420	2.340	2.200	22	23	2-	-1
	5	2.320	2.240	2.100	21	22	2-	-0
OBSOLETE 9	5	2.220	2.140	2.000	20	21	1-	-9
	5	2.120	2.040	1.900	19	20	1-	-8
	5	2.020	1.940	1.800	18	19	1-	-7
	5	1.920	1.840	1.700	17	18	1-	-6
	5	1.820	1.740	1.600	16	17	1-	-5
	5	1.720	1.640	1.500	15	16	1-	-4
9 OBSOLETE	5	1.620	1.540	1.400	14	15	1-	-3
	5	1.520	1.440	1.300	13	14	1-	-2
	5	1.420	1.340	1.200	12	13	1-	-1
	5	1.320	1.240	1.100	11	12	1-	-0
	5	1.220	1.140	1.000	10	11		-9
	5	1.120	1.040	.900	9	10		-8
	5	1.020	.940	.800	8	9		-7
	5	.920	.840	.700	7	8		-6
	5	.820	.740	.600	6	7		-5
	5	.720	.640	.500	5	6		-4
	5	.620	.540	.400	4	5		-3
	5	.520	.440	.300	3	4		-2
	5	.420	.340	.200	2	3	103080-1	
	FINISH	D	C	B	A	NO OF POS	ASSEMBLY PART NUMBER	

THIS DRAWING IS A CONTROLLED DOCUMENT.

DIMENSIONS: INCHES

TOLERANCES UNLESS OTHERWISE SPECIFIED:
0 PLC ± -
1 PLC ± -
2 PLC ± .02
3 PLC ± .005
4 PLC ± -
ANGLES ± -

MATERIAL: RETARDANT THERMOPLASTIC, COLOR-BLACK
POSTS-BRASS

FINISH: SEE TABLE

DWN J. MARTINELLI 17AUG92
CHK -
APVD H. PALEY 21AUG92
PRODUCT SPEC -
APPLICATION SPEC -
WEIGHT -

TE Connectivity

NAME: ASSEMBLY, MOD II, SINGLE ROW, .100 C/L, (4) SIDED SHROUD

SIZE	CAGE CODE	DRAWING NO	RESTRICTED TO
A1	00779	C-103080	-

CUSTOMER DRAWING | SCALE 4:1 | SHEET 1 OF 1 | REV V2

Mouser Electronics

Authorized Distributor

Click to View Pricing, Inventory, Delivery & Lifecycle Information:

TE Connectivity:

1-103080-0