Mounting Brackets [Refer to *Dimensions* on page *6*.]

Model	Fitting materials	Count	Accessories			Applicable sensor (mounting pitch on sensor side)	Page
			Description	Material	Count		Dimensions
E39-L31	Iron, zinc plating	1	Slotted/Phillips screws, M3 × 12 (with spring washers)	Iron, zinc plating	2	E3C-S50 (8)	5
E39-L40	Iron, zinc plating	1	Phillips screws M4 × 25 (with spring and plain washers) Nuts M4	Iron, zinc plating Iron, zinc plating	2 2	E3JK	
E39-L41	Iron, zinc plating	2	Phillips screws M3 × 14 (with spring washers) Plain washer M3	Iron, zinc plating Iron, zinc plating	4 4	E3C-1 (10)	
E39-L42	Iron, black coating	2	Phillips screws M3 × 10 (with spring washers) Plain washer M3	Iron, zinc plating Iron, zinc plating	4 4	E3C-2 (20) E3C-DS10 (19) E3C-VS1G (19) E3C-VS3R (19)	
E39-L43	Stainless steel (SUS304)	1	Slotted/Phillips screws M3 × 8 (with spring and plain washers)	Stainless steel (SUS304)	2	E3Z pre-wired model (25.4)	7
E39-L44	Stainless steel (SUS304)	1	Slotted/Phillips screws M3 × 8 (with spring and plain washers)	Stainless steel (SUS304)	2	E3Z pre-wired model (25.4)	
E39-L51	Iron, zinc plating	1	Slotted/Phillips screws M4 × 30 (with spring and plain washers) Nuts M4	Iron, zinc plating Iron, nickel plating	2 2	E3JM (40)	
E39-L53	Iron, zinc plating	1	---	---	---	E3JM (40)	
E39-L54V	Stainless steel (SUS304)	1	---	---	---	E32-T54V	
E39-L83	Stainless steel	1	---	---	---	E32-T24S E32-A03	8
E39-L85	Stainless steel (SUS304)	1	Hexagonal bolts M4 × 12 (with spring and plain washers)	Iron, zinc plating	2	E3S-C (25.4)	
E39-L86	Stainless steel (SUS304)	1	Hexagonal bolts M4 × 12 (with spring and plain washers)	Iron, zinc plating	2	E3S-C (25.4)	
E39-L87	Stainless steel (SUS304)	1	Hexagonal bolts M4 × 12 (with spring and plain washers)	Iron, zinc plating	2	E3S-C (25.4)	

Note: Applicable models that appear shaded come with the Mounting Brackets at left as accessories.

Model	Fitting materials	Count	Accessories			Applicable sensor (mounting pitch on sensor side)	Page
			Description	Material	Count		Dimensions
E39-L93FH	Stainless steel (SUS304)	1	Holder (upper) Holder (lower) Pipe	Heat-resistant ABS resin 66 nylon Stainless steel (SUS304)	1 1 1	E3Z (25.4) E39-R1/E39-R3	9
E39-L93FV	Stainless steel (SUS304)	1	Bolts M4 × 12 with Hexagonal holes Bolts M4 × 30 with hexagonal holes	Iron, nickel plating Iron, nickel plating	2 1		
E39-L93H	Stainless steel (SUS304)	1	Phillips screws M3 × 12 (with spring and plain washers)	Stainless steel (SUS304)	2		
E39-L93V	Stainless steel (SUS304)	1	Spring washer M4 Plain washer M4 Nuts M4	Iron, nickel plating Iron, nickel plating Iron, nickel plating	1 1 3		
E39-L93XY	---	---	Holder Pipe Bolts M5 × 16 with hexagonal holes Nuts M5	66 nylon Stainless steel (SUS304) Stainless steel (SUS304) Stainless steel (SUS304)	1 1 2 2	E3Z (25.4) E39-R1/E39-R3	10
E39-L94	Iron, zinc plating	2	Phillips screws M3 × 10 Nuts M3	Iron, zinc plating Iron, zinc plating	4 4	E32-T16P (19) E32-T16PR (19)	
E39-L96 * For installation of Sensor Adjuster E39-L93	Stainless steel (SUS304)	1	Phillips screws M3 × 6 (with spring and plain washers)	Iron, nickel plating	2	E39-R1	
E39-L98	Stainless steel (SUS304)	1	Slotted/Phillips screws M3 × 12 (with spring and plain washers)	Stainless steel (SUS304)	2	E3Z pre-wired model (25.4)	
E39-L102	Stainless steel (SUS304)	1	Hexagonal bolts M4 × 12 (with spring and plain washers)	Iron, zinc plating	2	E3S-C (horizontal type) (25.4)	11
E39-L103	Stainless steel (SUS304)	1	Hexagonal bolts M4 × 12 (with spring and plain washers)	Iron, zinc plating	2	E3S-C (vertical type) (25.4)	
E39-L104	Stainless steel (SUS304)	1	Slotted/Phillips screws M3 × 8 (with spring and plain washers)	Stainless steel (SUS304)	2	E3Z pre-wired model (25.4) E32-R21 (for installation of E39-R3) (25.4)	
E39-L116	Stainless steel (SUS304)	1	Nut plate	Stainless steel (SUS304)	1	E3T-S (9/15)	12
E39-L117	Stainless steel (SUS304)	1	Nut plate	Stainless steel (SUS304)	1	E3T-S (9/15)	
E39-L118	Stainless steel (SUS304)	1	Nut plate	Stainless steel (SUS304)	1	E3T-S (9/15)	
E39-L119	Stainless steel (SUS304)	1	---	---	---	E3T-F (8)	
E39-L120	Stainless steel (SUS304)	1	---	---	---	E3T-F (8)	
E39-L127-T1	Iron, zinc plating	1	Phillips screws M2.3 × 8 Spring washer M2.3	Iron, zinc plating Iron, zinc plating	4 4	E3C-S10 (7.5)	
E39-L127-T2	Iron, zinc plating	1	Phillips screws M2.3 × 8 Spring washer M2.3	Iron, zinc plating Iron, zinc plating	4 4		
E39-L127-T3	Iron, zinc plating	1	Phillips screws M2.3 × 8 Spring washer M2.3	Iron, zinc plating Iron, zinc plating	4 4		

Note: Applicable models that appear shaded come with the Mounting Brackets at left as accessories.

Model	Fitting materials	Count	Accessories			Applicable sensor (mounting pitch on sensor side)	Page
			Description	Material	Count		Dimensions
E39-L142	Stainless steel (SUS304)	1	Slotted/Phillips screws M3 × 8 (with spring and plain washers)	Stainless steel (SUS304)	2	E3Z pre-wired model (25.4)	13
E39-L143	Stainless steel (SUS304)	1	None	---	---	E3X-DA-S/MDA E3X-NA E3C-LDA E2C-EDA E4C-UDA	
E39-L144	Stainless steel (SUS304)	1	Slotted/Phillips screws M3 × 12 (with spring and plain washers)	Stainless steel (SUS304)	2	E3Z pre-wired model (25.4)	
E39-L148	Stainless steel (SUS304)	1	None	---	---	E3X-NA	
E39-L149	Iron, black coating	1	None	---		E3Z-G	14
E39-L150	Stainless steel (SUS304)	1	Holder/bracket Shaft (brace) Bolt with hexagonal hole Nut Phillips screw Slotted/Phillips screws	PBT (polybutylene terephthalate) Stainless steel (SUS304) Stainless steel (SUSXM7) Stainless steel (SUS304) Stainless steel (SUSXM7) Stainless steel (SUS304)	1 1 1 1 1 2	E3Z (25.4) E3S-R6□/R8□ (20) E39-R3	
E39-L151	Stainless steel (SUS304)	1	Holder/bracket Shaft (brace) Bolt with hexagonal hole Nut Phillips screw Slotted/Phillips screws	PBT (polybutylene terephthalate) Stainless steel (SUS304) Stainless steel (SUSXM7) Stainless steel (SUS304) Stainless steel (SUSXM7) Stainless steel (SUS304)	1 1 1 1 1 2	E3Z (25.4) E3S-R6□/R8□ (20) E39-R3	
E39-L153	Stainless steel (SUS304)	1	Slotted/Phillips screws M3 × 8 (with spring and plain washers)	Stainless steel (SUSXM7) Stainless steel (SUS304)	2	E3Z pre-wired model (25.4)	
E39-L166	Stainless steel (SUS304)	1	Nut plate	Stainless steel (SUS304)	1	E3T-S□□M (13/16)	15
E39-L167	Stainless steel (SUS304)	1	---	---	---	E3T-FD□□M (8)	
E39-L168	PBT (polybutylene terephthalate)	1	---	---	---	E3T-FD□□M	16
E39-L180	Stainless steel (SUS304)	1	Phillips screw Nut plate	Stainless steel Stainless steel	2 1	ZX1-LD50□ ZX1-LD100□	
E39-L181	Stainless steel (SUS304)	1	Phillips screw Nut plate	Stainless steel Stainless steel	2 1	ZX1-LD300□ ZX1-LD600□	
E39-L185	Stainless steel (SUS304)	1	Phillips screw Nut plate	Stainless steel Stainless steel	2 1	E3NC-LH02	
E39-L186	Stainless steel (SUS304)	1	Phillips screw Nut plate	Stainless steel Stainless steel	2 1	E3NC-LH01	
E39-L187	Stainless steel (SUS304)	1	Phillips screw Nut plate	Stainless steel Stainless steel	2 1	E3NC-SH250H E3NC-SH250 E3NC-SH100	17
E39-L188	Stainless steel (SUS304)	1	Phillips screw Nut plate	Stainless steel Stainless steel	2 1	E3NC-SH250H E3NC-SH250 E3NC-SH100	
E39-L190	Stainless steel (SUS304)	1	Phillips screw Nut plate	Stainless steel Stainless steel	2 1	E3NC-LH03	

Note: Applicable models that appear shaded come with the Mounting Brackets at left as accessories.

Slits

Model	Slit width	Installation procedure	Applicable type
E39-S39	Width 1 × 20 mm	Seal type	E3JM-10□4 (T)-N
E39-S61	Width 0.5, 1, 2, 4 × 11 mm	Plug-in type	E3S-CT□1
E39-S63	0.5-mm dia., 1 mm		E3T-ST1□
E39-S64	0.5-mm dia., 1 mm		E3T-FT1□
E39-S65A	0.5 mm dia.		E3Z-T□□
E39-S65B	1-mm dia.		
E39-S65C	2-mm dia.		
E39-S65D	Width 0.5 × 10 mm		
E39-S65E	Width 1 × 10 mm		
E39-S65F	Width 2 × 10 mm		
E39-S68	Width 0.5, 1 × 13.4 mm	Seal type	E32-T16P E32-T16PR
E39-S76A	0.5-mm dia.	Plug-in type	E3T-ST□M
E39-S76B	1-mm dia.		

Note: Applicable models that appear shaded come with the Slits at left as accessories

Reflectors (Refer to *Dimensions* on page 18.)

Name	Reflectors		Non-fogging reflective plate	Reflectors			Special Reflector for E3ZM-B		
Item / Model	**E39-R1**	**E39-R1S**	**E39-R1K**	**E39-R2**	**E39-R6**	**E39-R10**	**E39-RP1**	**E39-RSP1**	**E39-RP37**
Directional angle	30° min. *1			30° min. *2	30° min.				
Ambient operating temperature range	–25 to 55°C						–40 to 60°C	–25 to 55°C	
Ambient storage temperature range	–40 to 70°C		–40 to 55°C	–40 to 70°C				0 to 40°C	
Ambient operating humidity range	35% to 85%					35% to 95%	35% to 85%		
Ambient storage humidity range	35% to 95%							35% to 85%	
Degree of protection	IEC IP67							---	
Accessories	---								Phillips screws M3 × 8, spring washers M3, nuts M3

*1. 40° or higher for E3JM-R and E3JK-R.
*2. 40° or higher for E3G-R.

Name	Small reflector				Tape reflector *		
Item / Model	**E39-R9**	**E39-R3**	**E39-R4**	**E39-R37-CA** *	**E39-RS1 E39-RS1-CA**	**E39-RS2 E39-RS2-CA**	**E39-RS3 E39-RS3-CA**
Directional angle	30° min.						
Ambient operating temperature range	–25 to 55°C						
Ambient storage temperature range	–40 to 70°C			0 to 40°C			
Ambient operating humidity range	35% to 95%	35% to 85%					
Ambient storage humidity range	35% to 95%			35% to 85%			
Degree of protection	IEC IP67						
Accessories	---	Mounting Brackets E39-L104 (with screws)	---	Phillips screws M3 × 8, spring washers M3, nuts M3	---		

* Models ending in the suffix "-CA" are reflectors only for E3T-SR4□.

Name	Laser Reflectors				
	Standard		Short-distance transparent object detection	Sheets	
Item / Model	**E39-R12**	**E39-R13**	**E39-R14**	**E39-RS4**	**E39-RS5**
Ambient operating temperature range	–10 to 55°C (No icing)				
Ambient storage temperature range	–25 to 70°C (No icing)				
Ambient operating humidity range	35 to 85% (No condensation)				
Ambient storage humidity range	35 to 85% (No condensation)				

Name	Laser Reflectors			
	Standard		Sheets	
Item / Model	E39-R21 *	E39-R22 *	E39-RS10 *	E39-RS11 *
Ambient operating temperature range	–10 to 55°C (No icing and no condensation)			
Ambient storage temperature range	–25 to 70°C (No icing and no condensation)			
Ambient operating humidity range	35 to 85% (No condensation)			
Ambient storage humidity range	35 to 85% (No condensation)			

* Models only for E3NC-LH03

Mounting Bracket Dimensions

(Unit: mm)
Tolerance class IT16 applies to dimensions in this datasheet unless otherwise specified.

E39-L31

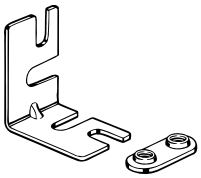

Material: Iron

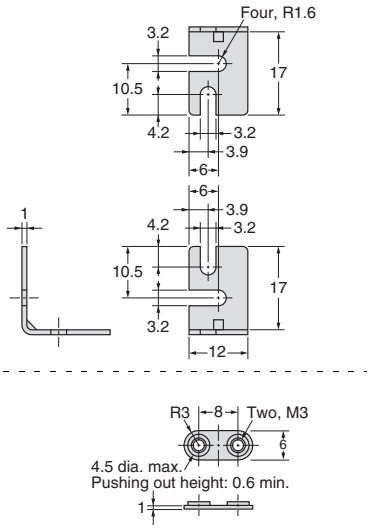

E39-L40

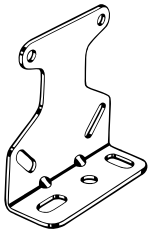

Material: Iron

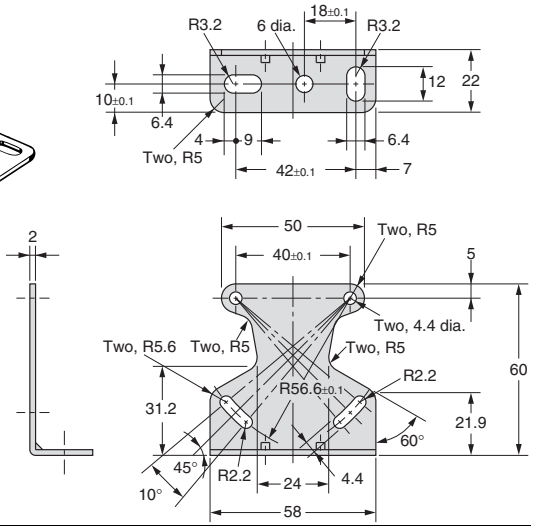

E39-L41

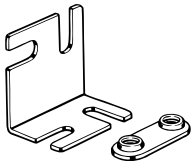

Material: Iron

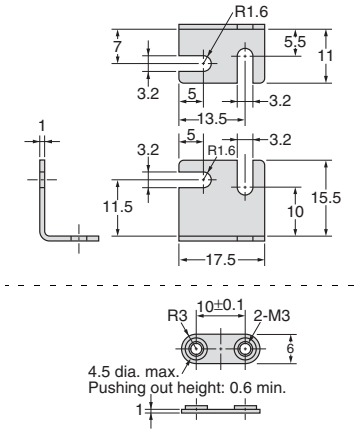

E39-L42

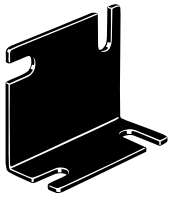

Material: Iron

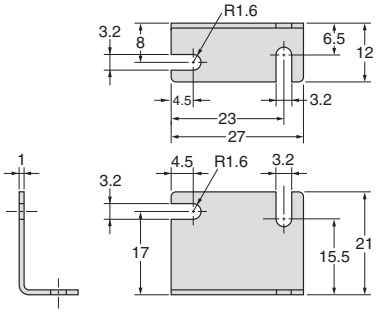

E39-L43

Material: Stainless steel (SUS304)

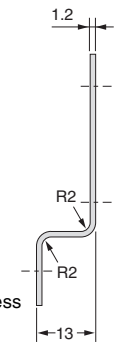

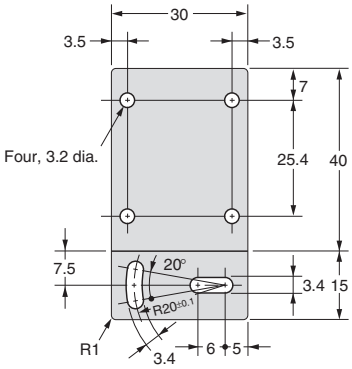

E39-L44

Material: Stainless steel (SUS304)

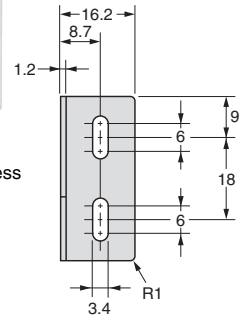

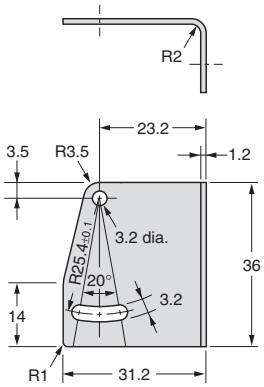

E39-L51

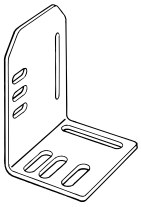

Material: Iron

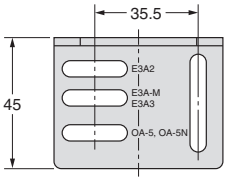

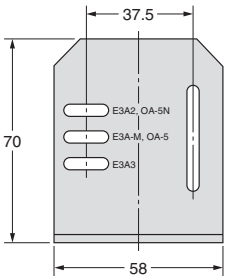

E39-L53

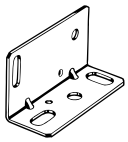

Material: Iron

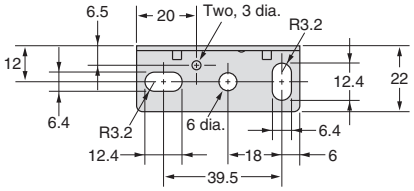

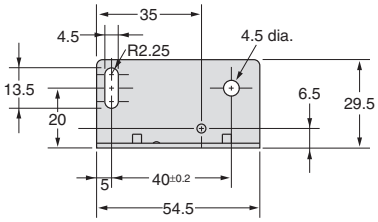

E39-L54V

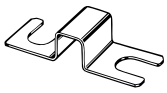

Material: Stainless steel (SUS304)

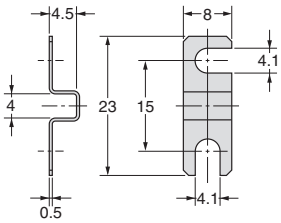

E39-L83

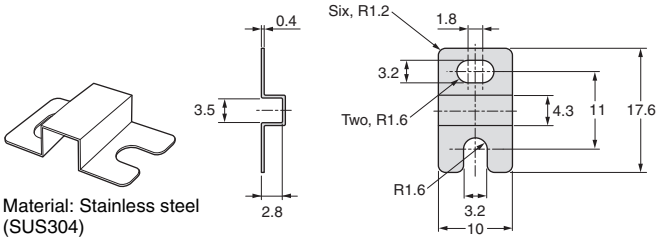

Material: Stainless steel (SUS304)

E39-L85

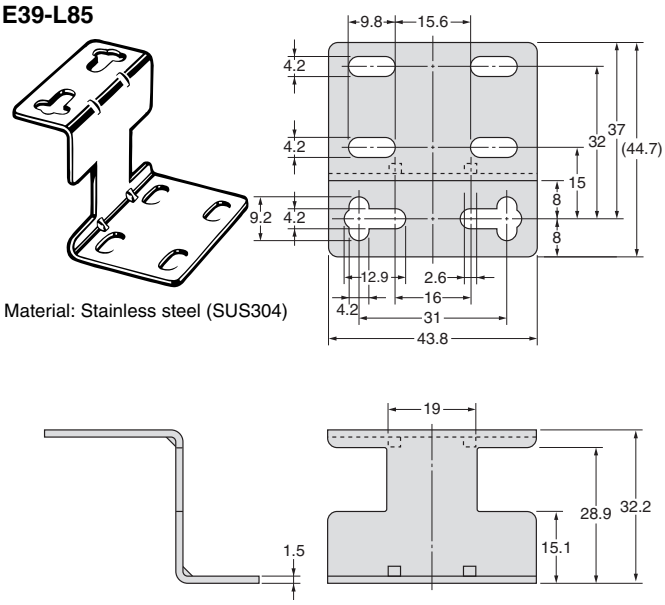

Material: Stainless steel (SUS304)

E39-L86

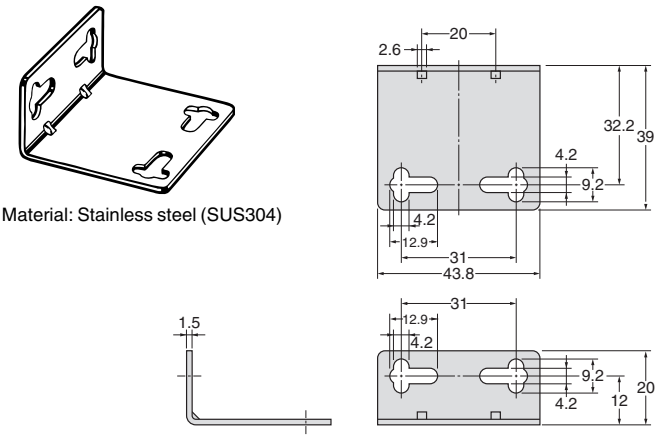

Material: Stainless steel (SUS304)

E39-L87

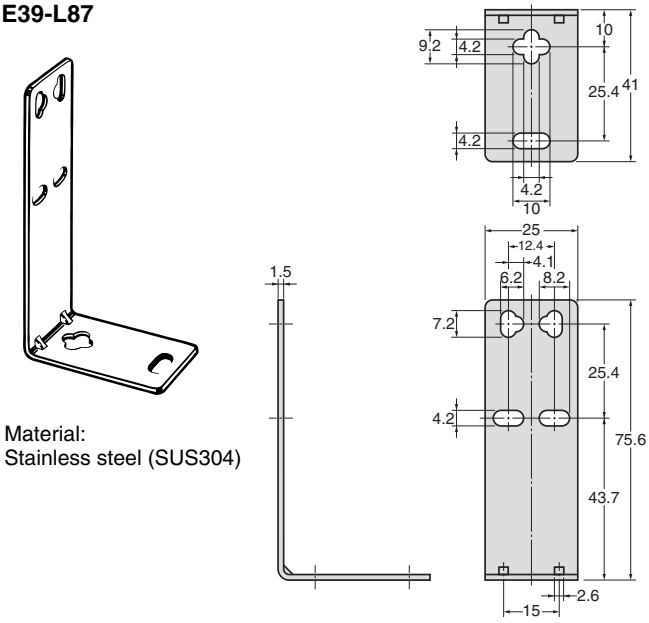

Material:
Stainless steel (SUS304)

E39-L93FH

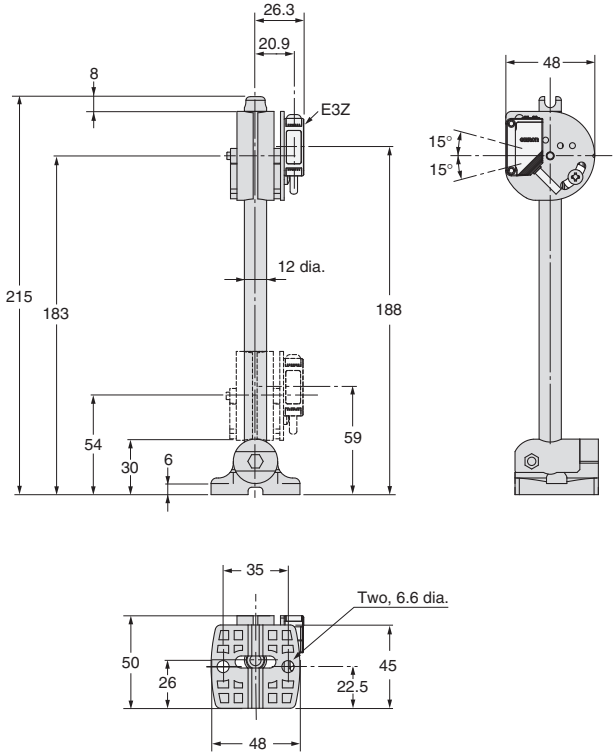

E39-L93FV

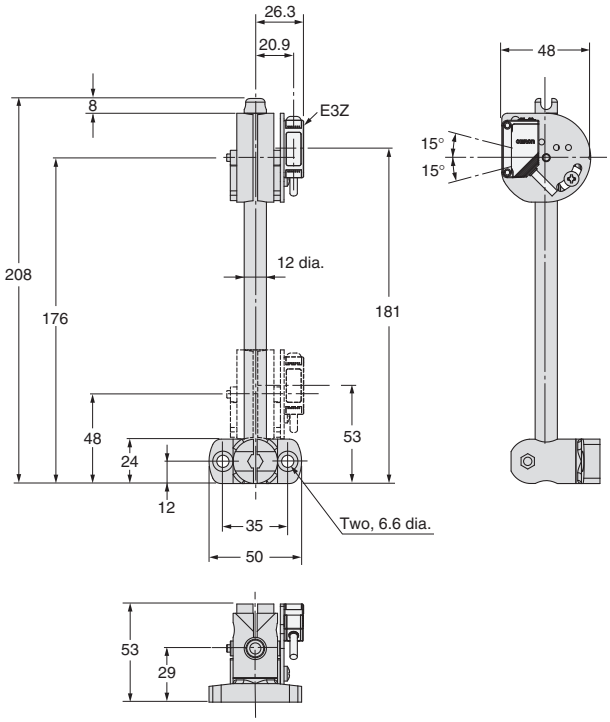

E39-L93H

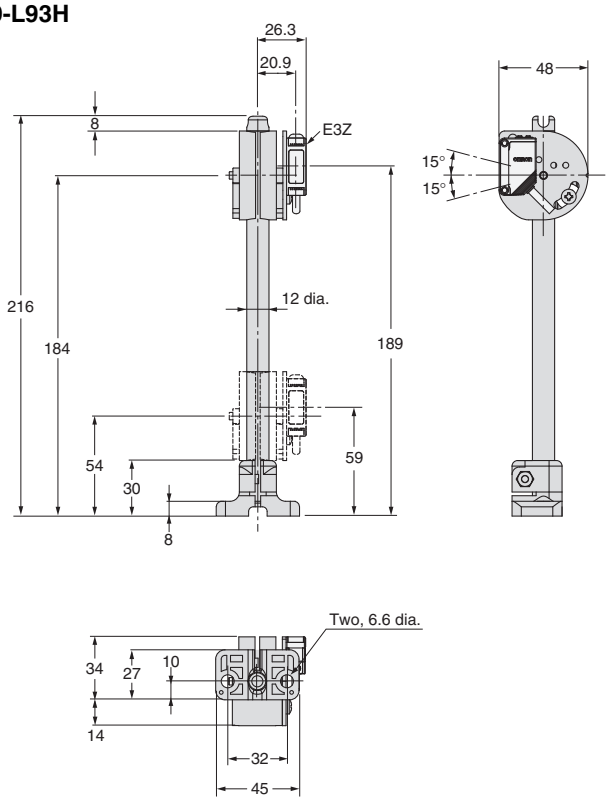

E39-L93V

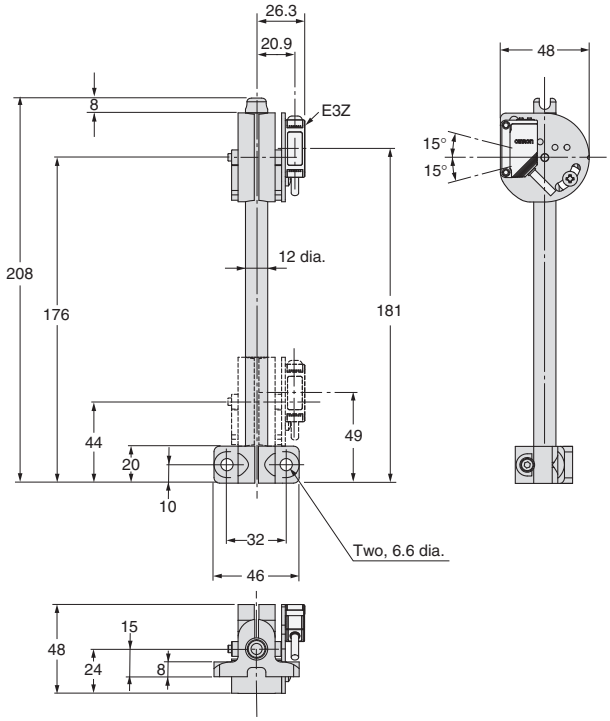

E39-L93XY

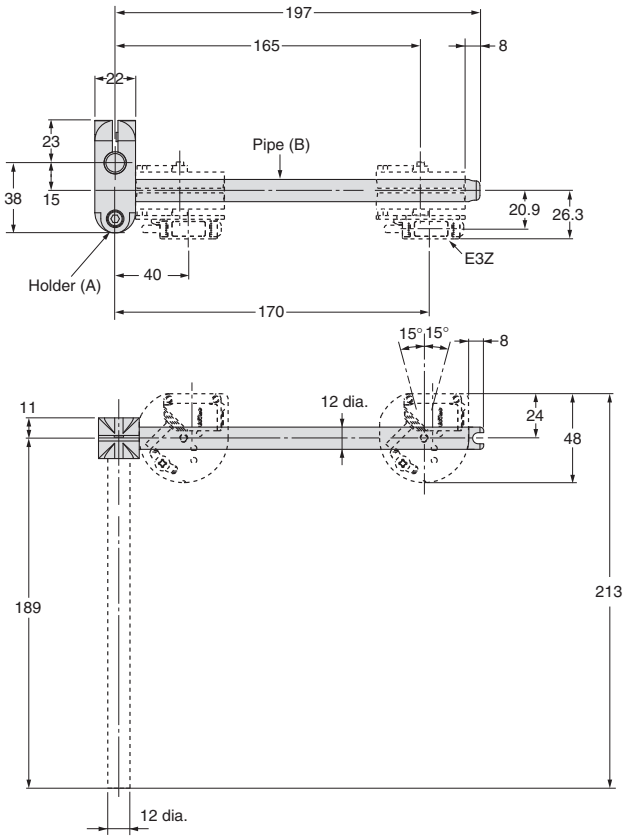

Note: The E39-L93XY consists of only the one joint holder (A) and pipe, and the two hexagonal bolts and nuts. It cannot be mounted to the Sensor alone.

E39-L94

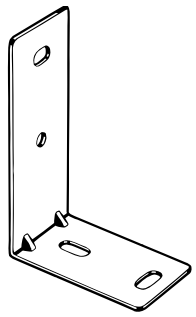

Material: Iron

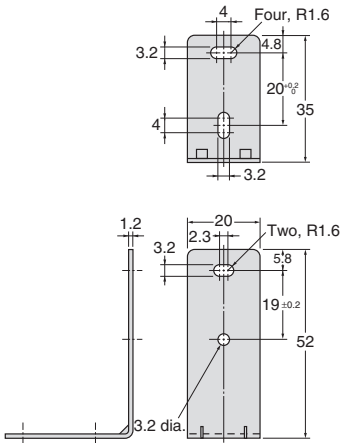

E39-L96

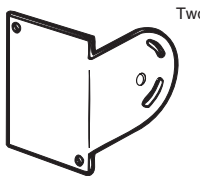

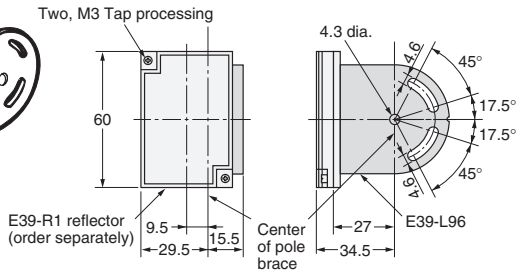

Material:
Stainless steel
(SUS304)
2-mm-thick

E39-L98

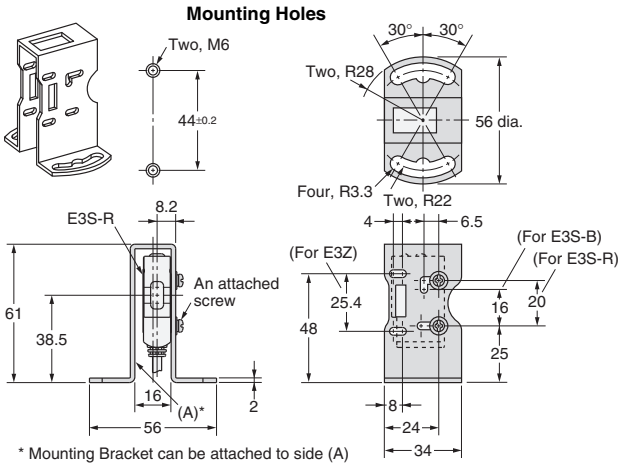

* Mounting Bracket can be attached to side (A)

Material: Stainless steel (SUS304)

E39-L102

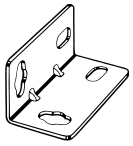

Material:
Stainless steel (SUS304)

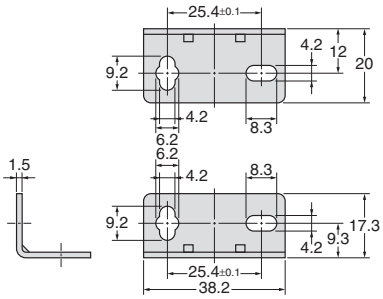

E39-L103

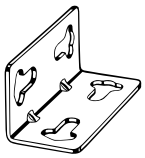

Material:
Stainless steel (SUS304)

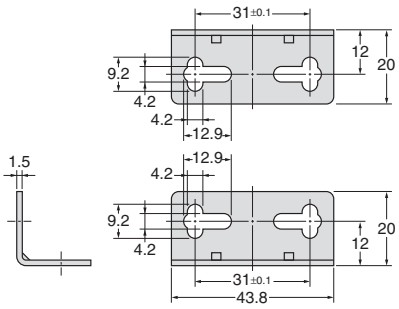

E39-L104

Material:
Stainless steel
(SUS304)

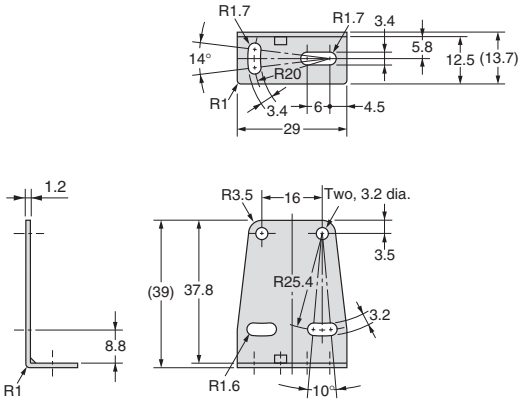

E39-L116

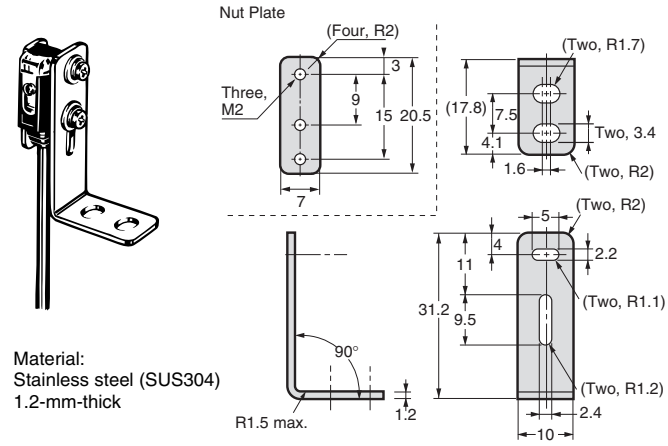

Material:
Stainless steel (SUS304)
1.2-mm-thick

E39-L117

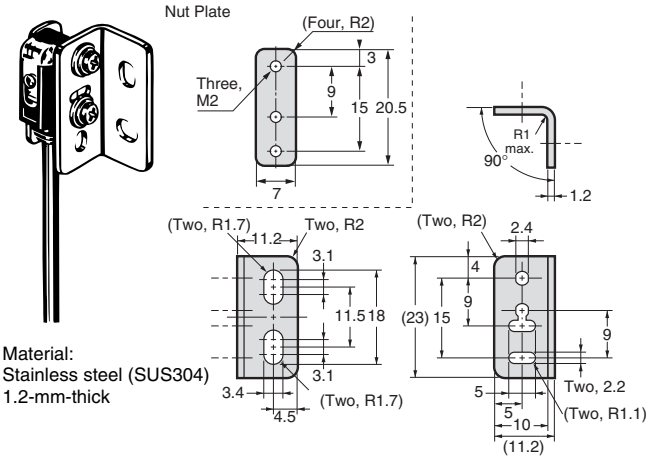

Material:
Stainless steel (SUS304)
1.2-mm-thick

E39-L118

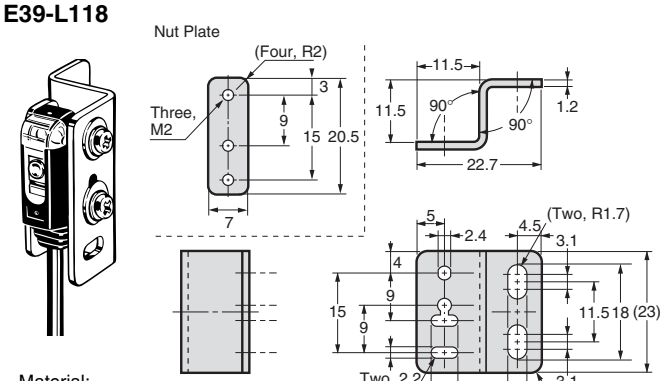

Material:
Stainless steel (SUS304)
1.2-mm-thick

E39-L119

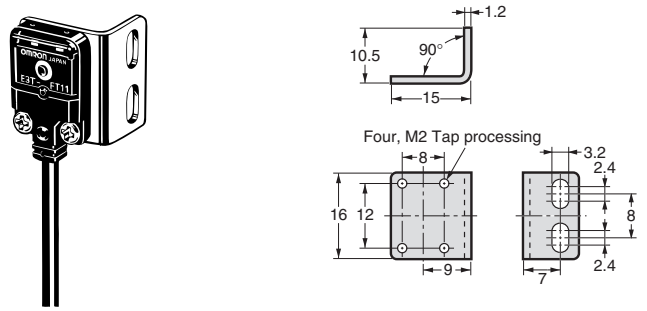

Material:
Stainless steel (SUS304)
1.2-mm-thick

E39-L120

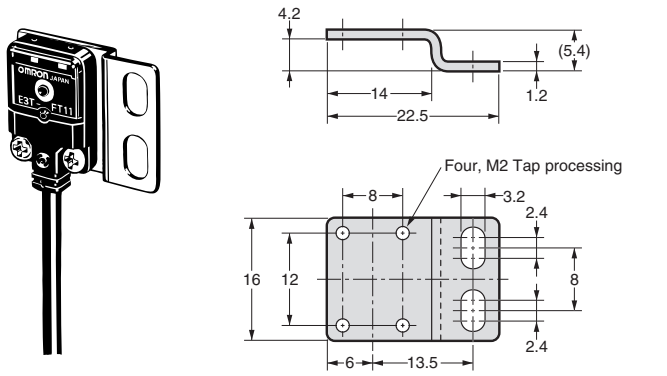

Material: Stainless steel (SUS304)
1.2-mm-thick

E39-L127-T1
E39-L127-T2
E39-L127-T3

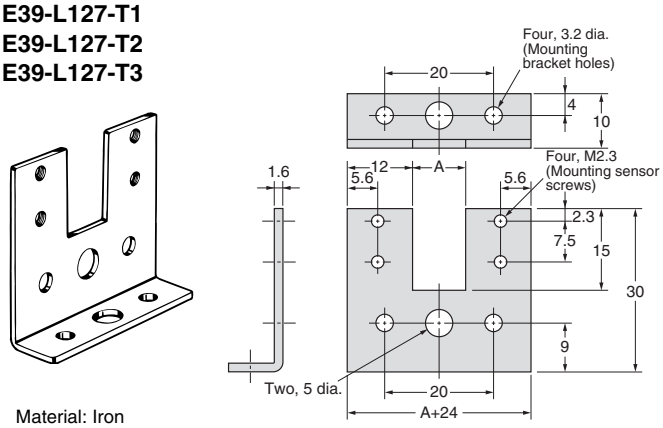

Material: Iron

Model	Dimension A (mm)
E39-L127-T1	10
E39-L127-T2	20
E39-L127-T3	30

E39-L142

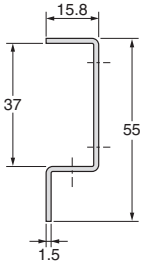

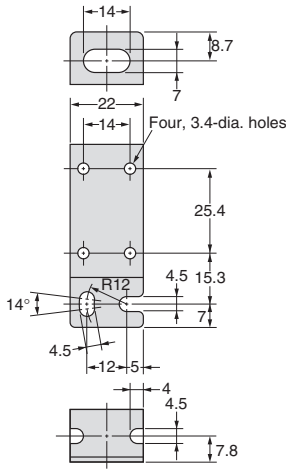

Material: Stainless steel (SUS304)

E39-L143

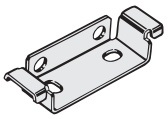

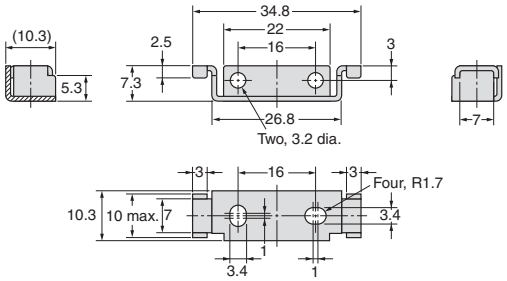

Material: Stainless steel (SUS304)

E39-L144

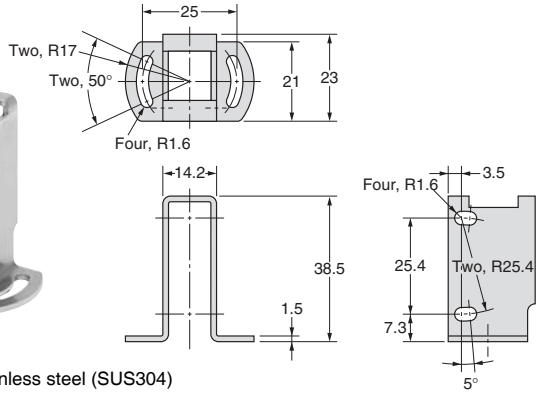

Material: Stainless steel (SUS304)

E39-L148

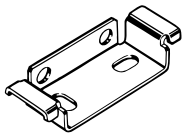

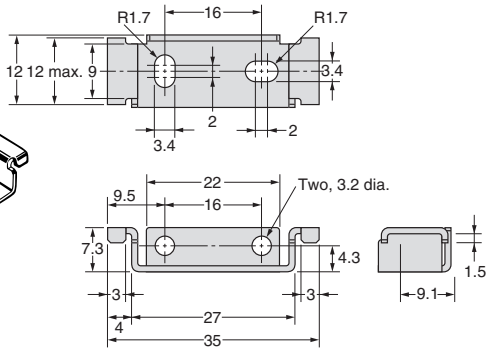

Material: Stainless steel (SUS304)

E39-L149

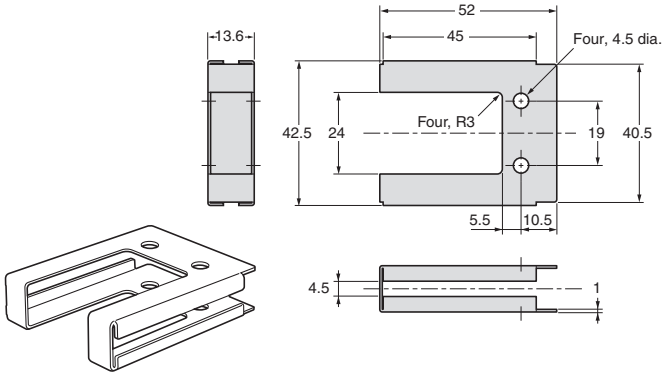

Material: Iron

E39-L150
E39-L151

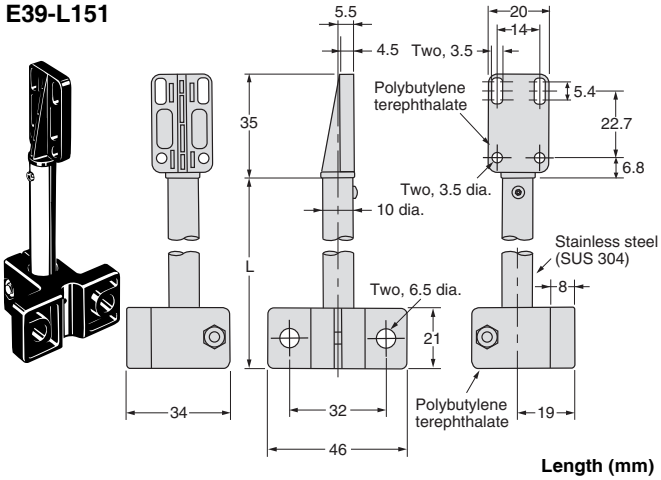

Length (mm)

Model	L
E39-L150	65
E39-L151	165

E39-L153

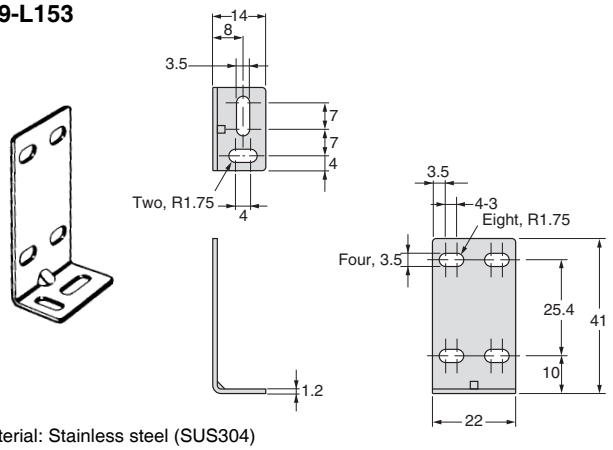

Material: Stainless steel (SUS304)

E39-L166

Material: Stainless steel (SUS304)
1.2-mm-thick

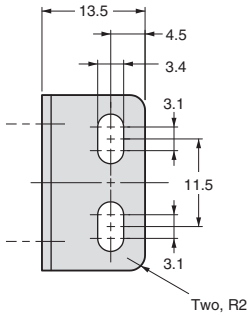

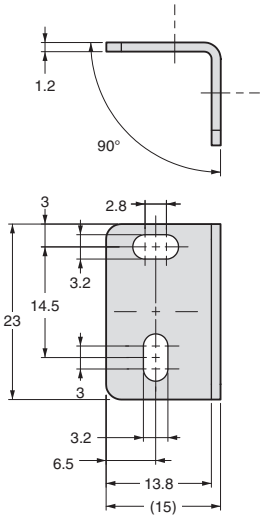

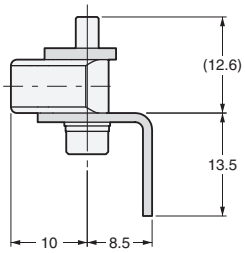

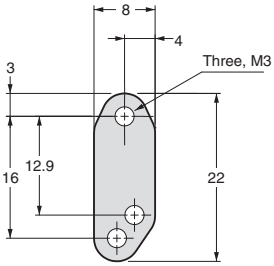

With Mounting Bracket
(Example: E3T-ST11M)

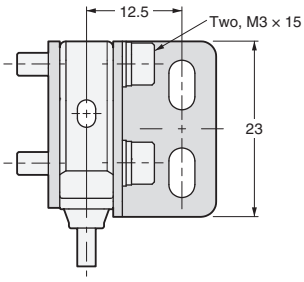

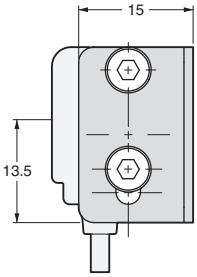

E39-L167

Material: Stainless steel (SUS304)
1.5-mm-thick

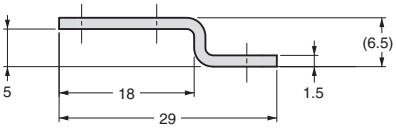

With Mounting Bracket
(Example: E3T-FD11M)

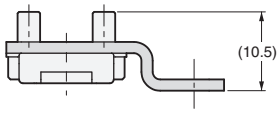

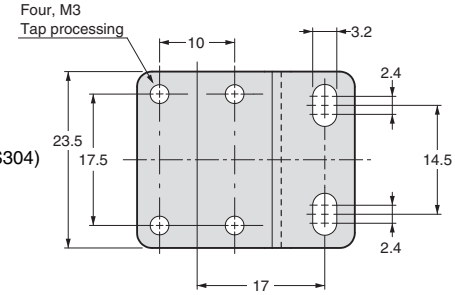

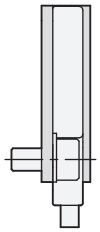

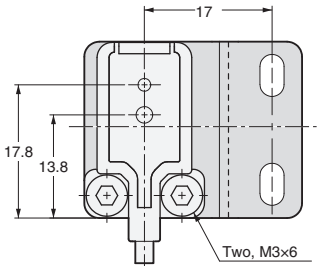

E39-L168

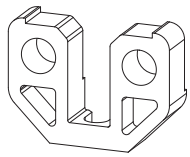

Material: Polybutylene terephthalate

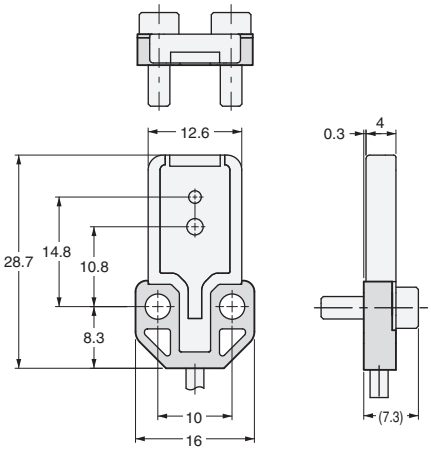

Note: Use this Spacer when mounting the Sensor from the back.

E39-L180

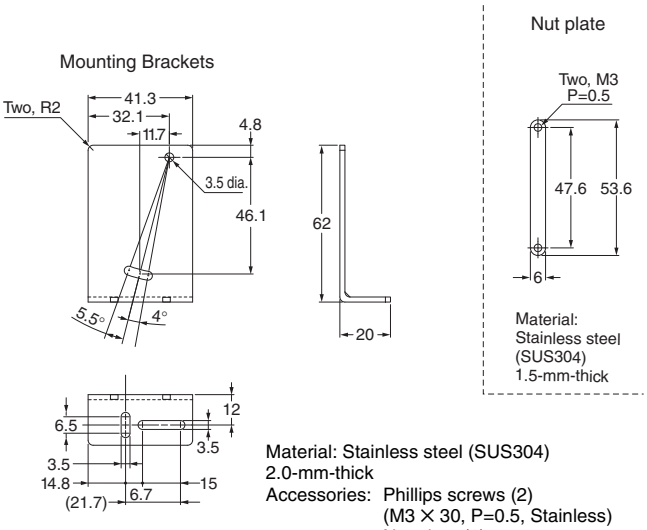

Material: Stainless steel (SUS304)
2.0-mm-thick
Accessories: Phillips screws (2)
(M3 × 30, P=0.5, Stainless)
Nut plate (1)

E39-L181

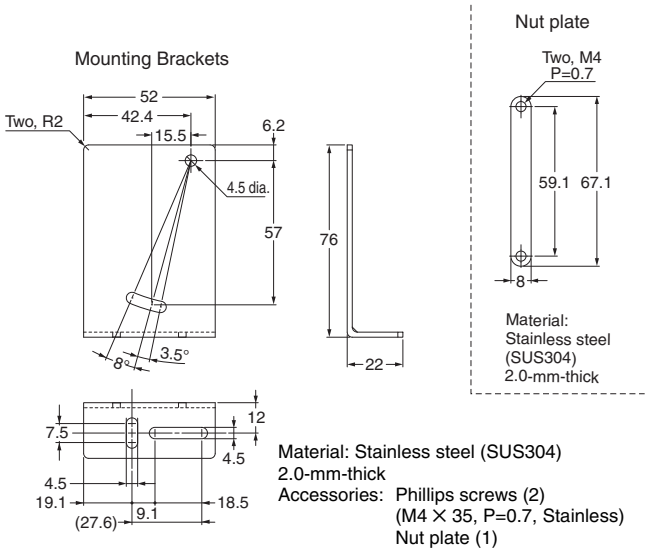

Material: Stainless steel (SUS304)
2.0-mm-thick
Accessories: Phillips screws (2)
(M4 × 35, P=0.7, Stainless)
Nut plate (1)

E39-L185

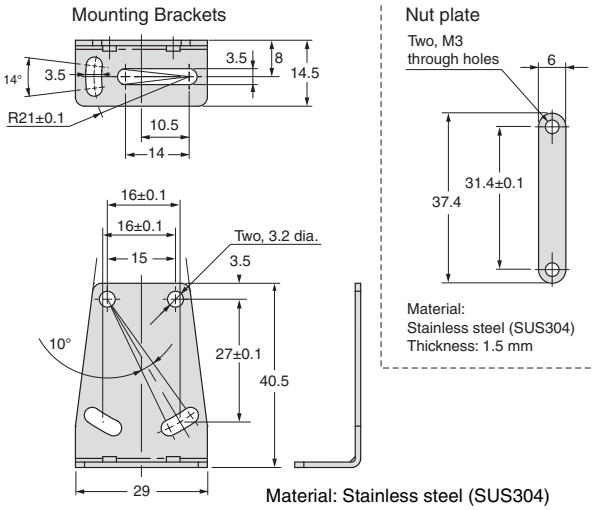

Material: Stainless steel (SUS304)
Thickness: 1.2 mm
Accessories: Phillips screws (2)
(M3 × 18, P=0.5, Stainless)
Nut plate (1)

E39-L186

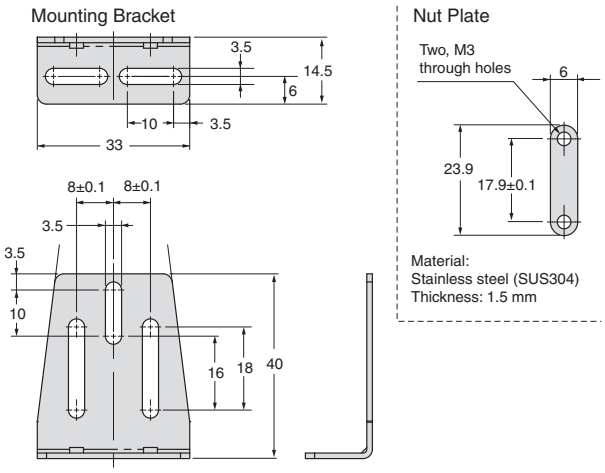

Material: Stainless steel (SUS304)
Thickness: 1.2 mm
Accessories: Phillips screws (2)
(M3 × 18, P=0.5, Stainless)
Nut plate (1)

E39-L187

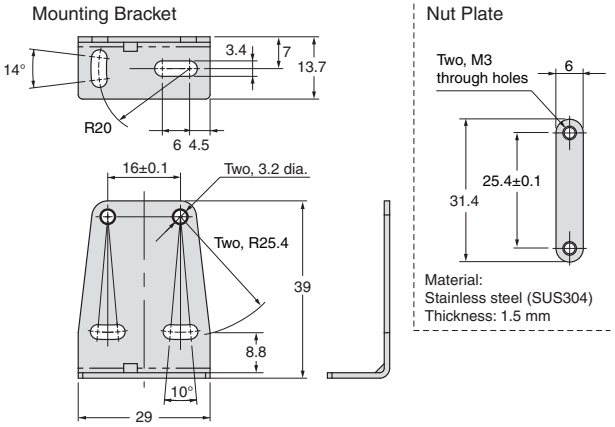

Material: Stainless steel (SUS304)
Thickness: 1.2 mm
Accessories: Phillips screws (2)
(M3 × 18, P=0.5, Stainless)
Nut plate (1)

E39-L188

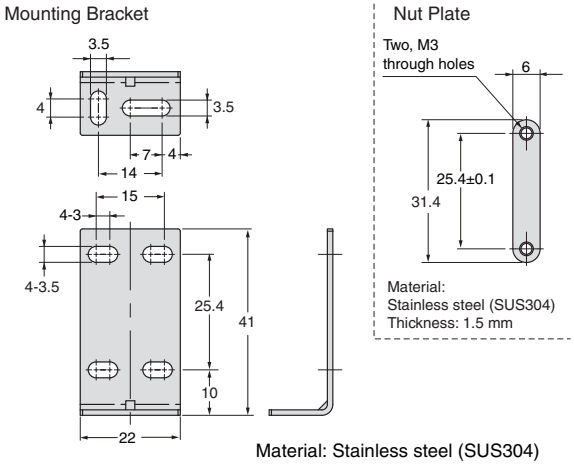

Material: Stainless steel (SUS304)
Thickness: 1.2 mm
Accessories: Phillips screws (2)
(M3 × 18, P=0.5, Stainless)
Nut plate (1)

E39-L190

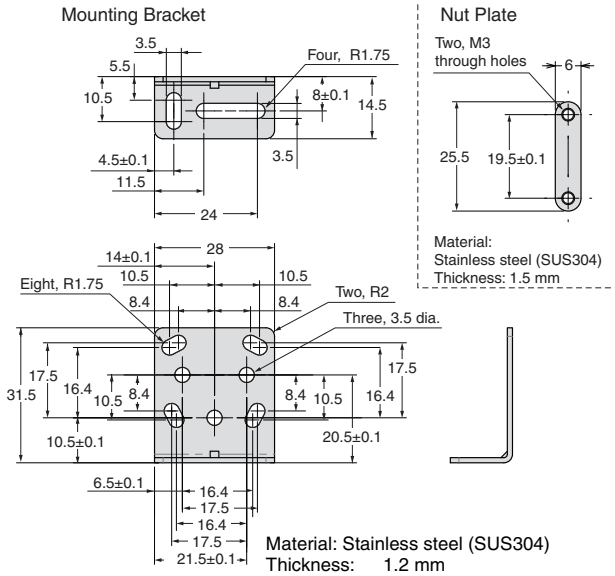

Material: Stainless steel (SUS304)
Thickness: 1.2 mm
Accessories: Phillips screws (2)
(M3 × 18, P=0.5, Stainless)
Nut plate (1)

Reflector dimensions

(Unit: mm)
Tolerance class IT16 applies to dimensions in this datasheet unless otherwise specified.

E39-R1
E39-R1S
E39-R1K *

Material,
reflective surface: acrylic
Rear surface: ABS

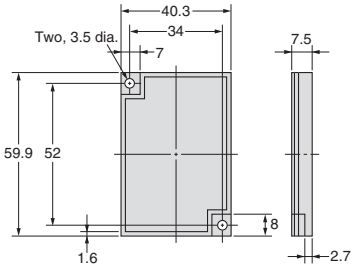

* E39-R1K only
Coating on reflective surface

E39-R2

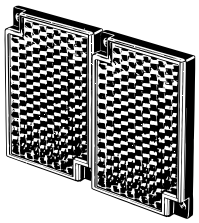

Material,
reflective surface: acrylic
Rear surface: ABS

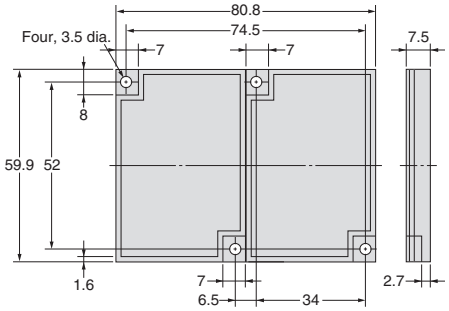

E39-R9

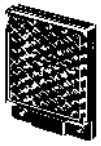

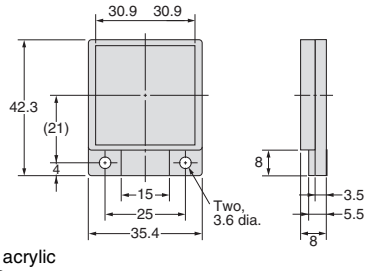

Material,
reflective surface: acrylic
Rear surface: ABS

E39-R10

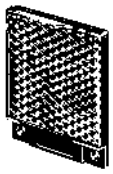

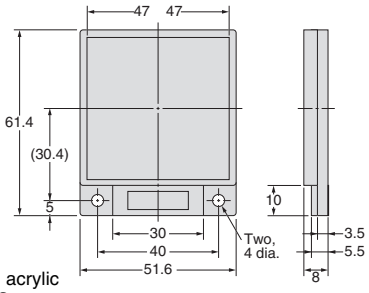

Material,
reflective surface: acrylic
Rear surface: ABS

E39-R3

Material,
reflective surface: acrylic
Rear surface: ABS

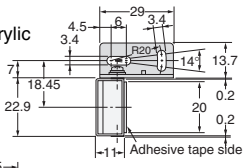

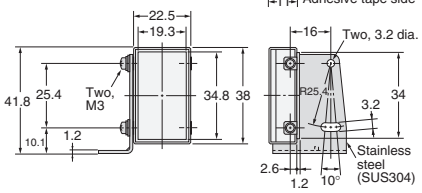

E39-R4

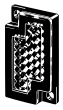

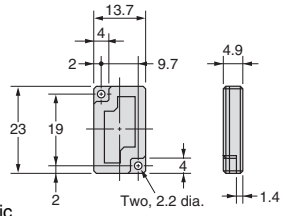

Material,
reflective surface: acrylic
Rear surface: ABS

E39-R37-CA

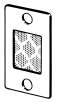

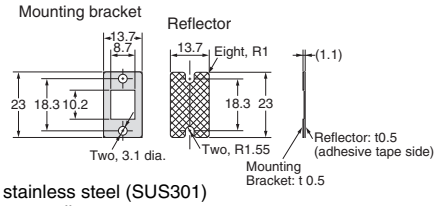

Material:
Mounting plate: stainless steel (SUS301)
Reflective surface: acrylic
Note: The reflective plate and mounting plate (1) come as a set.
Reflectors only for E3T-SR4□.

E39-R6

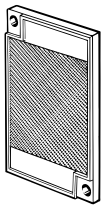

Material,
reflective surface: acrylic
Rear surface: ABS

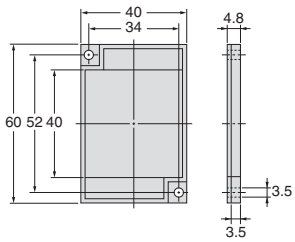

Retroreflector for E3ZM-B

E39-RP1

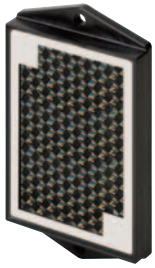

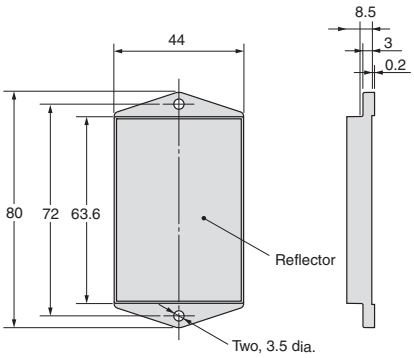

Material,
reflective surface:
acrylic
Rear surface: ABS

Retroreflector for E3ZM-B

E39-RP37

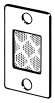

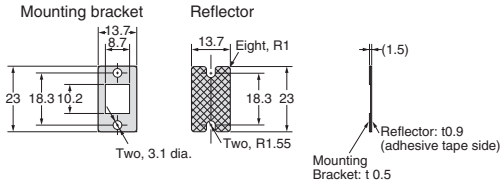

Material:
Reflective surface: acrylic
Mounting plate: stainless steel (SUS301)

Note: The reflective plate and mounting plate (1) come as a set.

Retroreflector for E3ZM-B

E39-RSP1

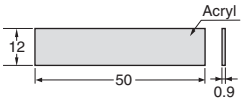

E39-RS1
E39-RS1-CA *1

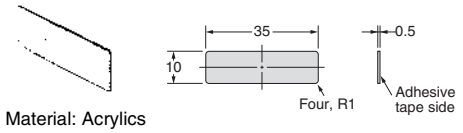

Material: Acrylics

E39-RS2
E39-RS2-CA *1

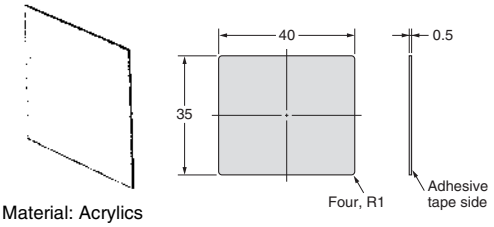

Material: Acrylics

E39-RS3
E39-RS3-CA *1

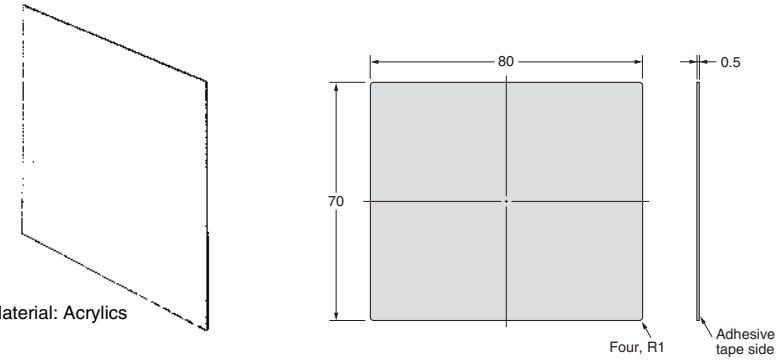

Material: Acrylics

E39-R12/R14 *2

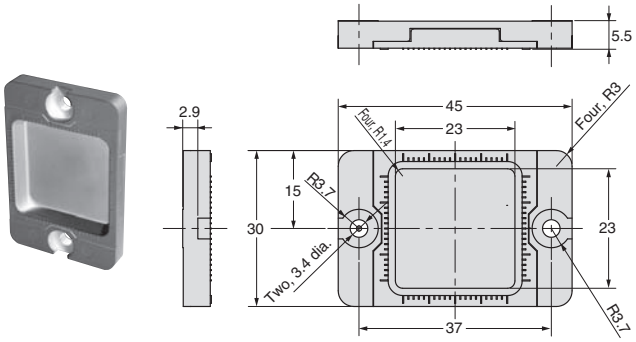

E39-R13 *2

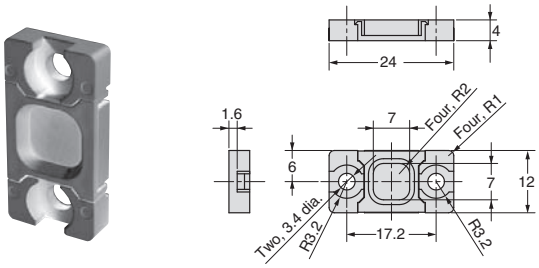

E39-RS4 *2

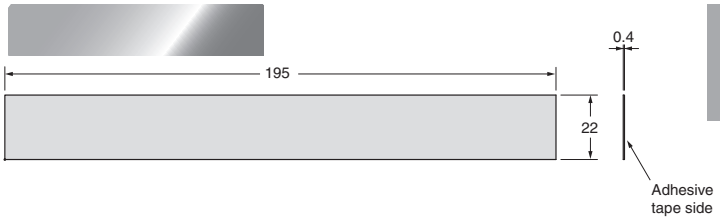

E39-RS5 *2

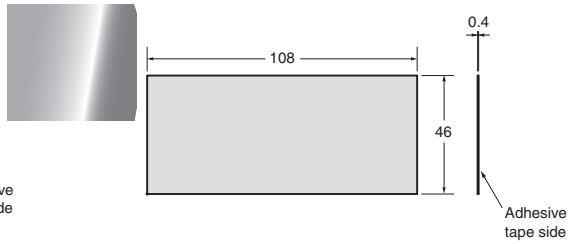

*1. Models ending in the suffix “-CA” are reflectors only for E3T-SR4□.
*2. These Reflectors are for E3C-LDA-series Sensors. However, the E39-R12 can also be used with an E3Z-LR□ Retroreflective Laser Sensor.

E39-R21 *3

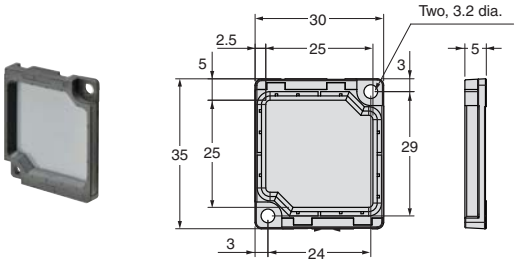

Material, reflective surface: methacrylic resin (PMMA)
Rear surface: Polybutylene terephthalate (PBT)

E39-R22 *3

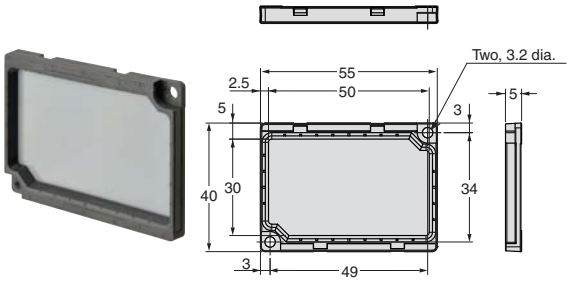

Material, reflective surface: methacrylic resin (PMMA)
Rear surface: Polybutylene terephthalate (PBT)

E39-RS10 *3

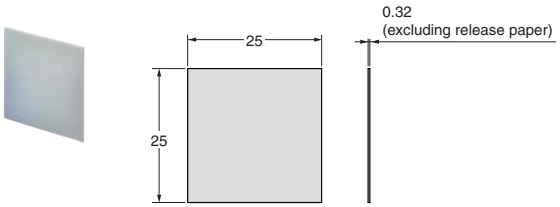

Material, reflective surface: acrylic

E39-RS11 *3

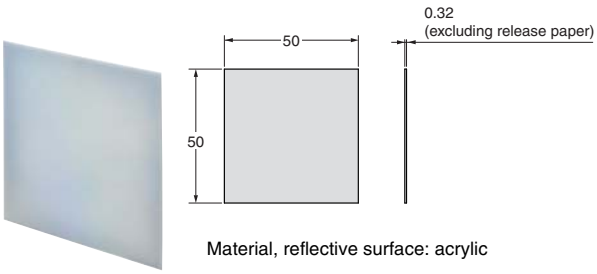

Material, reflective surface: acrylic

*3. Models only for E3NC-LH03

Terms and Conditions Agreement

Read and understand this catalog.
Please read and understand this catalog before purchasing the products. Please consult your OMRON representative if you have any questions or comments.

Warranties.
(a) Exclusive Warranty. Omron's exclusive warranty is that the Products will be free from defects in materials and workmanship for a period of twelve months from the date of sale by Omron (or such other period expressed in writing by Omron). Omron disclaims all other warranties, express or implied.
(b) Limitations. OMRON MAKES NO WARRANTY OR REPRESENTATION, EXPRESS OR IMPLIED, ABOUT NON-INFRINGEMENT, MERCHANTABILITY OR FITNESS FOR A PARTICULAR PURPOSE OF THE PRODUCTS. BUYER ACKNOWLEDGES THAT IT ALONE HAS DETERMINED THAT THE
PRODUCTS WILL SUITABLY MEET THE REQUIREMENTS OF THEIR INTENDED USE.
Omron further disclaims all warranties and responsibility of any type for claims or expenses based on infringement by the Products or otherwise of any intellectual property right. (c) Buyer Remedy. Omron's sole obligation hereunder shall be, at Omron's election, to (i) replace (in the form originally shipped with Buyer responsible for labor charges for removal or replacement thereof) the non-complying Product, (ii) repair the non-complying Product, or (iii) repay or credit Buyer an amount equal to the purchase price of the non-complying Product; provided that in no event shall Omron be responsible for warranty, repair, indemnity or any other claims or expenses regarding the Products unless Omron's analysis confirms that the Products were properly handled, stored, installed and maintained and not subject to contamination, abuse, misuse or inappropriate modification. Return of any Products by Buyer must be approved in writing by Omron before shipment. Omron Companies shall not be liable for the suitability or unsuitability or the results from the use of Products in combination with any electrical or electronic components, circuits, system assemblies or any other materials or substances or environments. Any advice, recommendations or information given orally or in writing, are not to be construed as an amendment or addition to the above warranty.
See http://www.omron.com/global/ or contact your Omron representative for published information.

Limitation on Liability; Etc.
OMRON COMPANIES SHALL NOT BE LIABLE FOR SPECIAL, INDIRECT, INCIDENTAL, OR CONSEQUENTIAL DAMAGES, LOSS OF PROFITS OR PRODUCTION OR COMMERCIAL LOSS IN ANY WAY CONNECTED WITH THE PRODUCTS, WHETHER SUCH CLAIM IS BASED IN CONTRACT, WARRANTY, NEGLIGENCE OR STRICT LIABILITY.
Further, in no event shall liability of Omron Companies exceed the individual price of the Product on which liability is asserted.

Suitability of Use.
Omron Companies shall not be responsible for conformity with any standards, codes or regulations which apply to the combination of the Product in the Buyer's application or use of the Product. At Buyer's request, Omron will provide applicable third party certification documents identifying ratings and limitations of use which apply to the Product. This information by itself is not sufficient for a complete determination of the suitability of the Product in combination with the end product, machine, system, or other application or use. Buyer shall be solely responsible for determining appropriateness of the particular Product with respect to Buyer's application, product or system. Buyer shall take application responsibility in all cases.
NEVER USE THE PRODUCT FOR AN APPLICATION INVOLVING SERIOUS RISK TO LIFE OR PROPERTY OR IN LARGE QUANTITIES WITHOUT ENSURING THAT THE SYSTEM AS A WHOLE HAS BEEN DESIGNED TO ADDRESS THE RISKS, AND THAT THE OMRON PRODUCT(S) IS PROPERLY RATED AND INSTALLED FOR THE INTENDED USE WITHIN THE OVERALL EQUIPMENT OR SYSTEM.

Programmable Products.
Omron Companies shall not be responsible for the user's programming of a programmable Product, or any consequence thereof.

Performance Data.
Data presented in Omron Company websites, catalogs and other materials is provided as a guide for the user in determining suitability and does not constitute a warranty. It may represent the result of Omron's test conditions, and the user must correlate it to actual application requirements. Actual performance is subject to the Omron's Warranty and Limitations of Liability.

Change in Specifications.
Product specifications and accessories may be changed at any time based on improvements and other reasons. It is our practice to change part numbers when published ratings or features are changed, or when significant construction changes are made. However, some specifications of the Product may be changed without any notice. When in doubt, special part numbers may be assigned to fix or establish key specifications for your application. Please consult with your Omron's representative at any time to confirm actual specifications of purchased Product.

Errors and Omissions.
Information presented by Omron Companies has been checked and is believed to be accurate; however, no responsibility is assumed for clerical, typographical or proofreading errors or omissions.

2017.4

In the interest of product improvement, specifications are subject to change without notice.

OMRON Corporation
Industrial Automation Company

http://www.ia.omron.com/

(c)Copyright OMRON Corporation 2017 All Right Reserved.

Mouser Electronics

Authorized Distributor

Click to View Pricing, Inventory, Delivery & Lifecycle Information:

Omron:

E39-R2 E39-R3 E39-R1 E39-R1S E39-R10 E39-R9 E39-RS1 E39-RS3