IDENTIFY PART AS PER SPEC. 115-67-2 IN AREA X..... FOR METHOD, REFER TO PARA 3.3 C; INCLUDE VENDOR SYMBOL, AND ENSURE PART IS DEMAGNETISED.

LEGAL,HEALTH,SAFETY AND ENVIRONMENTAL CONSTRAINTS MAY APPLY TO THE MATERIALS SPECIFIED ON THIS DOCUMENT REFER TO ENGINEERING MATERIAL SPEC.100-3012

NUMBER 576258

3rd ANGLE (AMERICAN) PROJECTION
DIMENSIONS IN METRIC
DO NOT SCALE PRINT

This information is confidential and is disclosed to you on condition that no further disclosure is made by you to other than AMP Personnel without written authorization from AMP of GREAT BRITAIN LTD.

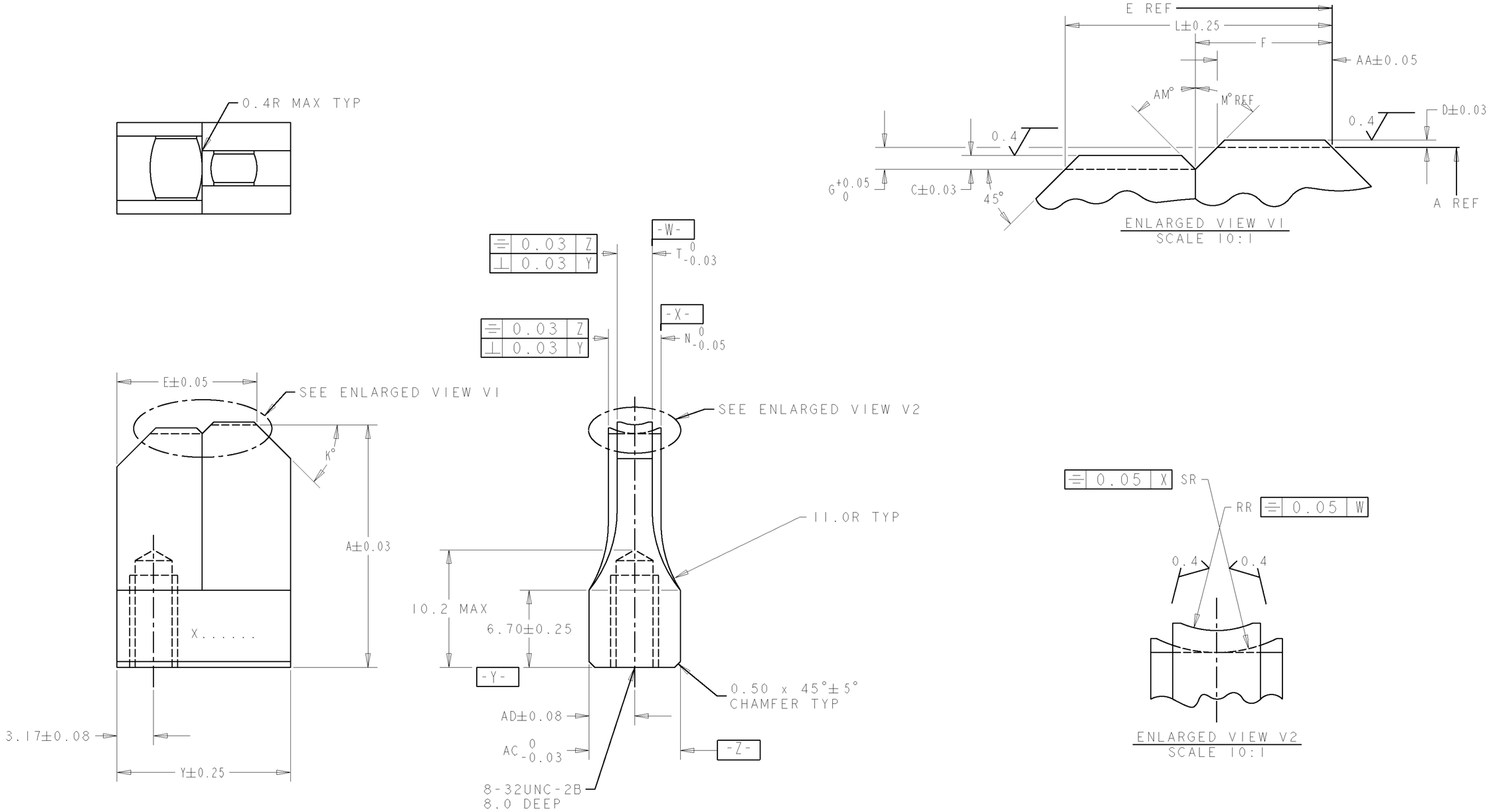

NOTES:

1. TOP EDGES TO REMAIN SHARP, REMOVE BURRS ONLY.

REV	ENGINEER	ECN	DATE	REV	ENGINEER	ECN	DATE
-	-	-	-	K	S.J.MASSIE	T3032	24-02-93
Y	M CLIFFORD	EB00-0232-99	21-04-99	J	S.J.MASSIE	T3012	04-02-93
W	L.J.LOFTHOUSE	EB00-0163-97	20-03-97	H	S.J.MASSIE	T2999	25-01-93
V	L.J.LOFTHOUSE	EB00-0268-96	03-06-96	G	S.J.MASSIE	T2933	29-10-92
U	L.J.LOFTHOUSE	EB00-0120-96	19-03-96	F	S.J.MASSIE	T2923	22-10-92
T	R.M.SQUIRES	T3554	23-06-95	E	S.J.MASSIE	T2911	07-10-92
S	R.M.SQUIRES	T3458	29-09-94	D	S.J.MASSIE	T2792	19-06-92
R	S.J.MASSIE	T3402	26-05-94	C	S.J.MASSIE	T2735	21-04-92
P	S.J.MASSIE	T3261	12-04-94	B	S.J.MASSIE	T2661	14-02-92
N	S.J.MASSIE	T3229	10-08-93	A	S.J.MASSIE	T2642	31-01-92
M	S.J.MASSIE	T3149	13-05-93	O	S.J.MASSIE	T2639	22-01-92
L	S.J.MASSIE	T3097	01-04-93	I	S.J.MASSIE	AS DRN	26-09-91

MATERIAL: 100-43

HEAT TREAT: 111-43 Rc 56-58

FINISH: 112-157

UNLESS OTHERWISE SPECIFIED: REMOVE BURRS. BREAK SHARP EDGES 0.38R MAX. 0.0 = ± 0.51 0.000 = ± 0.013 0.00 = ± 0.13 ANGLES = ± 0° 30′ 0.8

FIRST USED SEE TABLE | SCALE 4:1

DR. S.J.MASSIE 09/91
CHK. J.GARDNER 01/92
APP. F.A.B. 01/92

AMP of Great Britain Ltd. TERMINAL HOUSE, STANMORE, MIDDX.

NAME: ANVIL, COMBINATION

SHT 1 OF 2

LOC E A2 NUMBER 576258 REV Y

PRINT DIST. - B+

IDENTIFY PART AS PER SPEC. 115-67-2 IN X..... FOR METHOD, REFER TO PARA 3.3 C: INCLUDE VENDOR SYMBOL, AND ENSURE PART IS DEMAGNETISED.

LEGAL,HEALTH,SAFETY AND ENVIRONMENTAL CONSTRAINTS MAY APPLY TO THE MATERIALS SPECIFIED ON THIS DOCUMENT REFER TO ENGINEERING MATERIAL SPEC.100-3012

NUMBER 576258

PART NO	REV	T	N	A	G	AA	F	L	E	Y	AM°	M°	K°	D	RR	C	SR	AC	AD	FIRST USED
576258-1	O	2.03	3.56	21.06	0.40	4.85	5.23	8.84	12.50	15.06	45°	43°	45°	0.15	2.29	0.86	1.78	7.92	3.96	9-576533-2
576258-2	J	3.56	6.35	21.06	0.30	4.38	4.90	9.42	12.14	15.06	#	60°	45°	0.28	4.75	#	#	7.92	3.96	1-576074-0
576258-3	B	2.03	3.56	21.06	#	#	4.70	8.23	12.14	15.06	45°	45°	45°	0.15	2.29	0.28	4.75	7.92	3.96	576590-5
576258-4	C	2.79	3.81	21.06	0.50	4.06	4.55	7.69	12.50	15.06	30°	44°	45°	0.23	3.18	0.87	2.00	7.92	3.96	9-576533-3
576258-5	D	2.29	3.56	20.55	0.51	3.56	4.45	7.92	12.14	15.06	30°	60°	45°	0.18	2.29	0.82	1.84	7.92	3.96	1-576527-7
576258-6	D	2.79	3.94	21.06	#	#	5.08	9.65	11.89	15.06	45°	#	45°	0.20	3.18	0.50	3.18	7.92	3.96	576519-6
576258-7	E	2.54	3.81	21.06	0.38	4.34	5.00	8.89	12.09	15.00	45°	60°	45°	0.18	3.18	0.30	4.75	7.92	3.96	2-576074-1
576258-8	H	6.35	8.89	20.32	1.02	5.84	7.59	13.16	13.67	16.59	30°	60°	45°	0.46	7.92	1.07	8.89	9.53	4.76	576077-4
576258-9	G	3.05	4.57	21.06	#	#	5.66	10.31	13.54	15.06	45°	#	45°	0.18	3.18	1.16	2.36	7.92	3.96	576540-3
1-576258-0	K	2.79	3.94	21.06	#	#	6.92	10.73	15.00	18.00	45°	45°	45°	0.23	3.18	0.75	2.34	7.92	3.96	576009-9
1-576258-1	L	2.29	3.81	20.55	0.51	3.60	3.89	9.65	12.00	15.06	30°	30°	45°	0.18	2.29	0.94	1.93	7.92	3.96	3-576074-3
1-576258-2	M	2.29	4.06	21.06	0.38	3.30	3.96	7.62	12.14	15.06	30°	60°	45°	0.18	2.29	0.36	4.75	7.92	3.96	2-576074-8
1-576258-3	N	2.79	6.25	21.06	0.38	4.98	5.64	10.62	12.14	15.06	#	60°	45°	0.23	3.18	#	#	7.92	3.96	576520-3
1-576258-4	P	2.79	4.32	21.06	0.38	4.88	5.26	9.53	11.89	15.06	45°	45°	45°	0.23	3.18	1.02	2.30	7.92	3.96	4-576074-9
1-576258-5	R	3.56	5.33	20.32	0.76	4.83	5.59	11.18	11.89	15.06	45°	45°	45°	0.28	4.75	1.45	2.74	7.92	3.96	1-576042-6
1-576258-6	S	2.79	4.32	21.06	#	#	4.82	8.82	12.50	15.06	30°	#	45°	0.23	3.18	0.51	3.86	7.92	3.96	8-576019-6
1-576258-7	S	3.56	5.23	21.06	0.51	5.59	6.48	10.85	12.40	15.06	30°	60°	45°	0.25	4.75	0.53	6.35	7.92	3.96	576097-6
1-576258-8	T	4.57	6.86	21.06	0.76	5.46	6.22	11.56	12.19	15.06	#	45°	45°	0.36	4.75	1.56	4.13	7.92	3.96	3-576064-5
1-576258-9	U	4.06	5.23	21.06	0.69	4.83	6.02	11.00	12.14	15.88	30°	60°	45°	0.25	6.35	0.64	4.75	7.92	3.96	6-576074
2-576258-0	V	3.05	4.47	21.06	0.40	4.70	5.41	11.05	12.14	15.06	30°	60°	45°	0.25	3.18	1.18	2.34	7.92	3.96	7-576074-6
2-576258-1	W	3.56	4.06	21.06	0.40	4.45	4.83	10.50	12.14	15.0	30°	30°	45°	0.48	1.07	1.04	2.03	7.92	3.96	6-576019-5
2-576258-2	Y	2.29	3.30	21.06	0.63	3.17	3.81	9.53	11.89	15.06	45°	45°	30°	0.18	2.29	0.83	1.59	7.92	3.96	1157041-1
2-576258-3																				
2-576258-4																				
2-576258-5																				
2-576258-6																				
2-576258-7																				
2-576258-8																				
2-576258-9																				
3-576258-0																				
3-576258-1																				
3-576258-2																				
3-576258-3																				

3rd ANGLE (AMERICAN) PROJECTION
DIMENSIONS IN METRIC
DO NOT SCALE PRINT

This information is confidential and is disclosed to you on condition that no further disclosure is made by you to other than AMP Personnel without written authorization from AMP of GREAT BRITAIN LTD.

PRINT DIST. - B+

SEE SHEET ONE

REV	ENGINEER	ECN	DATE

MATERIAL: 100-43
HEAT TREAT: 111-43 Rc 56-58
FINISH: 112-157

UNLESS OTHERWISE SPECIFIED: REMOVE BURRS. BREAK SHARP EDGES 0.38R MAX. 0.0 = ± 0.51 0.000 = ± 0.013 0.00 = ± 0.13 ANGLES = ± 0° 30′ 0.8

FIRST USED SEE TABLE | SCALE #

DR. S.J.MASSIE 10/91
CHK. J.GARDNER 01/92
APP. F.A.B. 01/92

AMP of Great Britain Ltd. TERMINAL HOUSE, STANMORE, MIDDX.

NAME: ANVIL, COMBINATION

SHT 2 OF 2 | LOC E A2 | NUMBER 576258 | REV Y

Mouser Electronics

Authorized Distributor

Click to View Pricing, Inventory, Delivery & Lifecycle Information:

TE Connectivity:

1-576258-1