DESIGN UNITS: METRIC (mm) [INCHES]
UNLESS OTHERWISE SPECIFIED

FIRST ANGLE PROJECTION

REVISION				
REV.	DESCRIPTION	DATE	BY.	ECN NO.

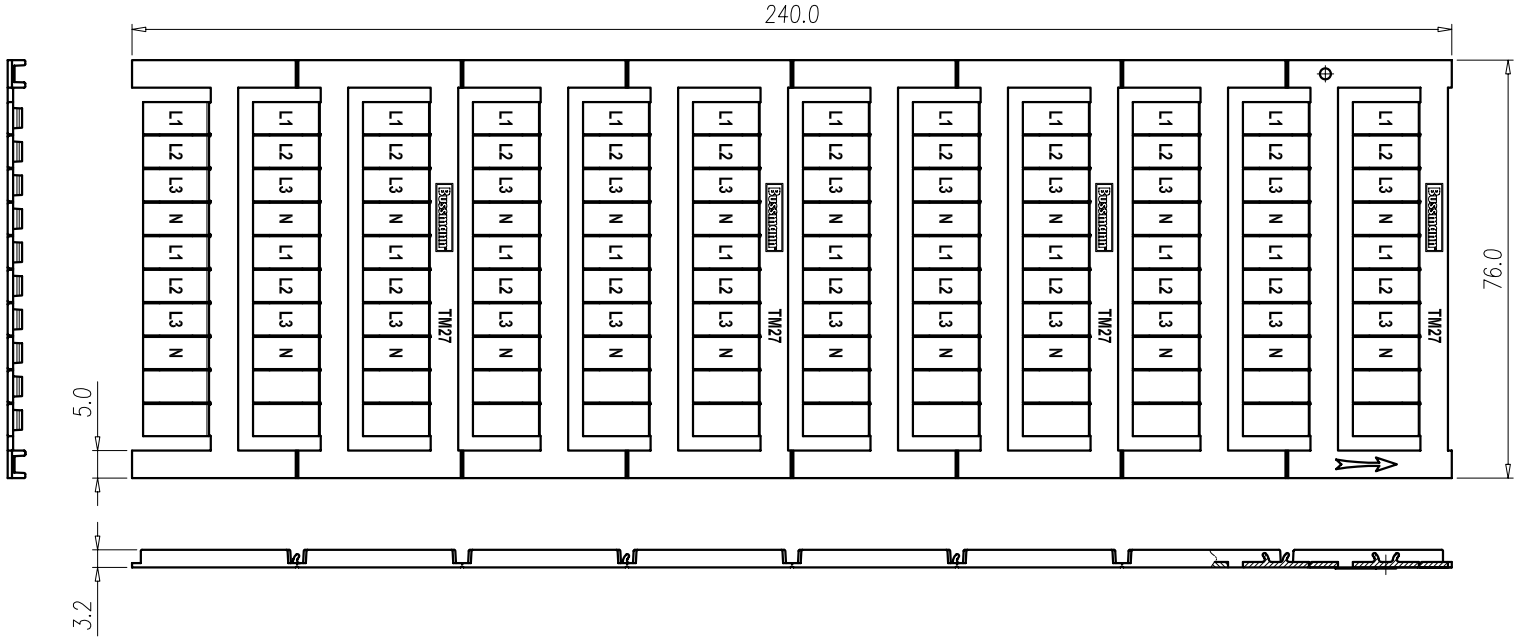

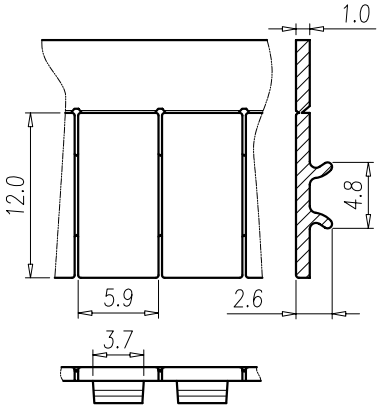

DETAIL S=2:1

NOTES:

1. RoHS compliant

	MARK	PA66	UL 94-V2 WHITE
ITEM	NAME OF PART	MATERIAL	NOTES

MODEL VERSION:

MATERIAL:

FINISH:

UNLESS OTHERWISE SPECIFIED
TOLERANCES TO BE
METRIC ± .20mm
INCHES ± .008in.
ANGULAR ± 1°

◇ INDICATES SIGNIFICANT DIMENSION OR FEATURE

△ INDICATES CRITICAL CHARACTERISTIC (MUST MEET CPK REQUIREMENTS)

GEOMETRIC TOLERANCES AND SYMBOLS ARE IN ACCORDANCE WITH THE AMERICAN NATIONAL STANDARD - ASME Y14.5-2009

MODEL SOURCE FILE:

CONFIDENTIAL. The information contained in this document is the property of Cooper Industries, Inc. It is not for public disclosure. Possession of the information does not convey any right to loan, sell or disclose the information. Unauthorized reproduction or use of the information is prohibited. This document is to be returned to Cooper Industries, Inc. upon completion of the purpose for which it is loaned or upon request.

COPYRIGHT. COOPER INDUSTRIES, INC. This is an unpublished work. The disclosure of this work is limited to select personnel. Further dissemination or disclosure to the public is PROHIBITED. This unpublished work is protected by Federal Copyright law and all rights thereunder are reserved by Cooper Industries, Inc.

COOPER Bussmann
St. Louis MO 63178

COOPER Xian Fusegear Co., Ltd.
NO. 86 Jinye Road High-Tech Zone
Xian China. 710077
Tel: +86 029 8824 1869
Fax: +86 029 8822 9227

TITLE: Marking Label

DWG NO: TM27CB-DH02

DRAWN BY:	CHECKED BY:	DATE:	SCALE:	SIZE:	SHEET:
W K		09/19/11	0.8:1	A4	1 OF 1

○C	○E/1201	○J/1208	○SE	○4062	○2010
○4063	○4217	○N/1204	○SP	○4094	○V/5022 /5023
○D	○4219	○SB	○U	○X	