MCX 50 Ohm
Plug Dummy Load

INCHES (MILLIMETERS)
CUSTOMER DRAWINGS AVAILABLE UPON REQUEST

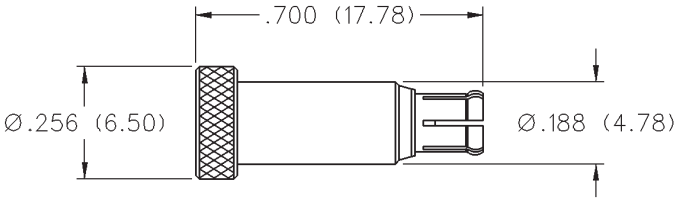

FREQ. RANGE	GOLD PLATED	NICKEL PLATED	RESISTANCE
0-1 GHz	133-3801-801	133-3801-806	50 Ohm

MCX - 50 Ohm Connectors

Specifications

INCHES (MILLIMETERS)
CUSTOMER DRAWINGS AVAILABLE UPON REQUEST

ELECTRICAL RATINGS

Impedance: 50 Ohms

Frequency Range: Connectors ..... 0-6 GHz
Dummy loads ..... 0-1 GHz

VSWR: (f = GHz)

	Straight Cabled Connectors	Right Angle Cabled Connectors
RG-178 cable	1.17 + .04f	1.07 + .06f
RG-316 and .086 semi-rigid cable	1.13 + .04f	1.07 + .04f
Adapters		1.13 + .04f
Uncabled receptacles, Dummy loads		N/A

Working Voltage: (Vrms maximum)†

Connectors for Cable Type	Sea Level	70K Feet
RG-178	250	65
RG-316, .086 semi-rigid uncabled uncabled receptacles, adapters	335	85
Dummy loads		N/A

Dielectric Withstanding Voltage: (VRMS minimum at sea level)
Connectors for RG-178 750
Connectors for RG-316, .086 semi-rigid, uncabled receptacles, adapters 1000
Dummy loads ..... N/A

Corona Level: (Volts minimum at 70,000 feet)
Connectors for RG-178 190
Connectors for RG-316, .086 semi-rigid uncabled receptacles, adapters 250
Dummy loads ..... N/A

Insertion Loss: (dB maximum, tested at 1 GHz)
Straight cable connectors and adapters ..... 0.1 dB
Right angle cable connectors ..... 0.2 dB
Uncabled receptacles, dummy loads ..... N/A

Insulation Resistance: 10,000 megohms minimum

Contact Resistance: (milliohms maximum)

	Initial	After Environmental
Center contact (straight cabled connectors, uncabled receptacles and adapters)	5.0	8.0
Center contact (right angle cabled connectors)	5.0	15.0
Outer contact	1.0	1.5
Braid to body (gold plated connectors)	1.0	N/A
Braid to body (nickel plated connectors)	2.5	N/A

RF Leakage: (dB typical tested at 2.5 GHz)
Cable connectors ..... -55 dB
Uncabled receptacles and adapters, dummy loads ..... N/A

Avoid user injury due to misapplication. See safety advisory definitions on page 2.
** All gold plated parts include a .00005" min. nickel underplate barrier layer.

RF High Potential Withstanding Voltage: (Vrms minimum, tested at 4 and 7 MHz)
Connectors for RG178 500
Connectors for RG316 and adapters 700
.086 semi-rigid 670
Uncabled receptacles 600
Dummy loads ..... N/A

Power Rating (Dummy Load): 0.5 watt @ +25°C, derated to 0.25 watt @ +125°C

MECHANICAL RATINGS

Engagement Design: Compatible with CECC 22220, Series MCX

Engagement Force: 5.6 pounds maximum axial force

Disengagement Force: 8 pounds maximum axial force, 1 pound min.

Contact Retention: 2.3 pounds min. axial force (captivated contacts)
1 inch-ounce min. torque (uncabled receptacles)

Cable Retention:	Axial Force* (pounds)	Torque (in-oz)
Connectors for RG178	10	N/A
Connectors for RG316	20	N/A
Connectors for RG316DS	25	N/A
Connectors for .086 semi-rigid	30	16

* or cable breaking strength whichever is less.

ENVIRONMENTAL RATINGS (Meets or exceed the applicable paragraph of MIL-C-39012)Durability: 500 cycles minimum

Temperature Range: Connectors ..... - 65°C to + 165°C
Dummy loads ..... - 65°C to + 125°C

Thermal Shock: MIL-STD-202, Method 107, Condition F (N/A dummy loads)

Corrosion: MIL-STD-202, Method 101, Condition B (N/A dummy loads)

Shock: MIL-STD-202, Method 213, Condition B (N/A dummy loads)

Vibration: MIL-STD-202, Method 204, Condition B (N/A dummy loads)

Moisture Resistance: MIL-STD-202, Method 106 (N/A dummy loads)

MATERIAL SPECIFICATIONS

Bodies: Brass per QQ-B-626 or zinc per ASTM B86-71, gold plated** per MIL-G-45204 .00001" min or nickel plated per QQ-N-290 or bright tin plated

Contacts: Male - brass per QQ-B-626, gold plated per MIL-G-45204 .00003" min.
Female - beryllium copper per QQ-C-530, gold plated per MIL-G-45204 .00003" min.

Insulators: PTFE fluorocarbon per ASTM D 1710 and ASTM D 1457

Expansion Caps: Brass per QQ-B-613, gold plated per MIL-G-45204 .00001" min. or nickel plated per QQ-N-290

Crimp Sleeves: Copper per WW-T-799, gold plated per MIL-G-45204 .00001" min. or nickel plated per QQ-N-290

Mounting Hardware: Brass (nuts) per QQ-B-626 or phosphor bronze (lockwashers) QQ-B-750, gold plated per MIL-G-45204 .00001" min. or nickel plated per QQ-N-290

MATING ENGAGEMENT FOR MCX SERIES COMPATIBLE WITH CECC 22220

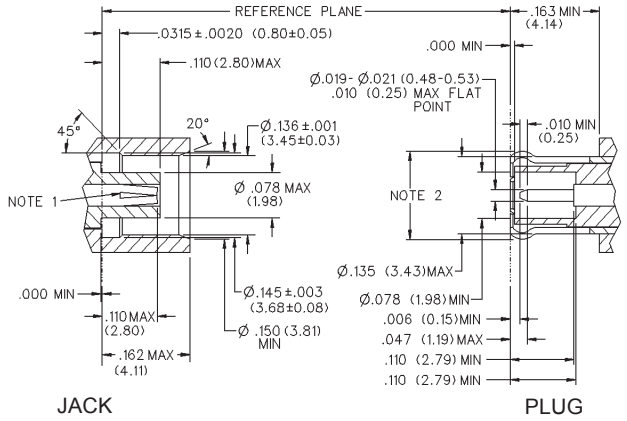

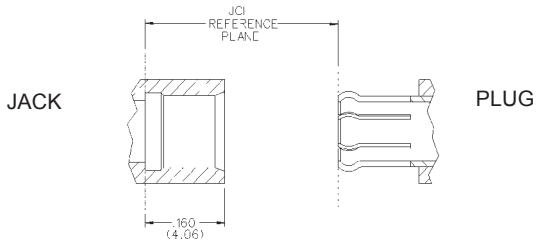

NOTES

1. ID of contact to meet VSWR mating characteristics and connector durability when mated with a dia. .019-.021 (0.48-0.53) male contact.
2. Must meet the force to engage and disengage when mated with mating part.

Cinch Connectivity Solutions
299 Johnson Avenue SW, Waseca, MN 56093 USA • 800.247.8256 • +1 507 833 8822 • cinchconnectivity.com

Mouser Electronics

Authorized Distributor

Click to View Pricing, Inventory, Delivery & Lifecycle Information:

Cinch Connectivity Solutions:

133-3801-806