REVISIONS			
REV	DESCRIPTION	DATE	APPROVED
01 2	REDRAWN ON CAD ECN 92-0009	8/13/93	8/13/93

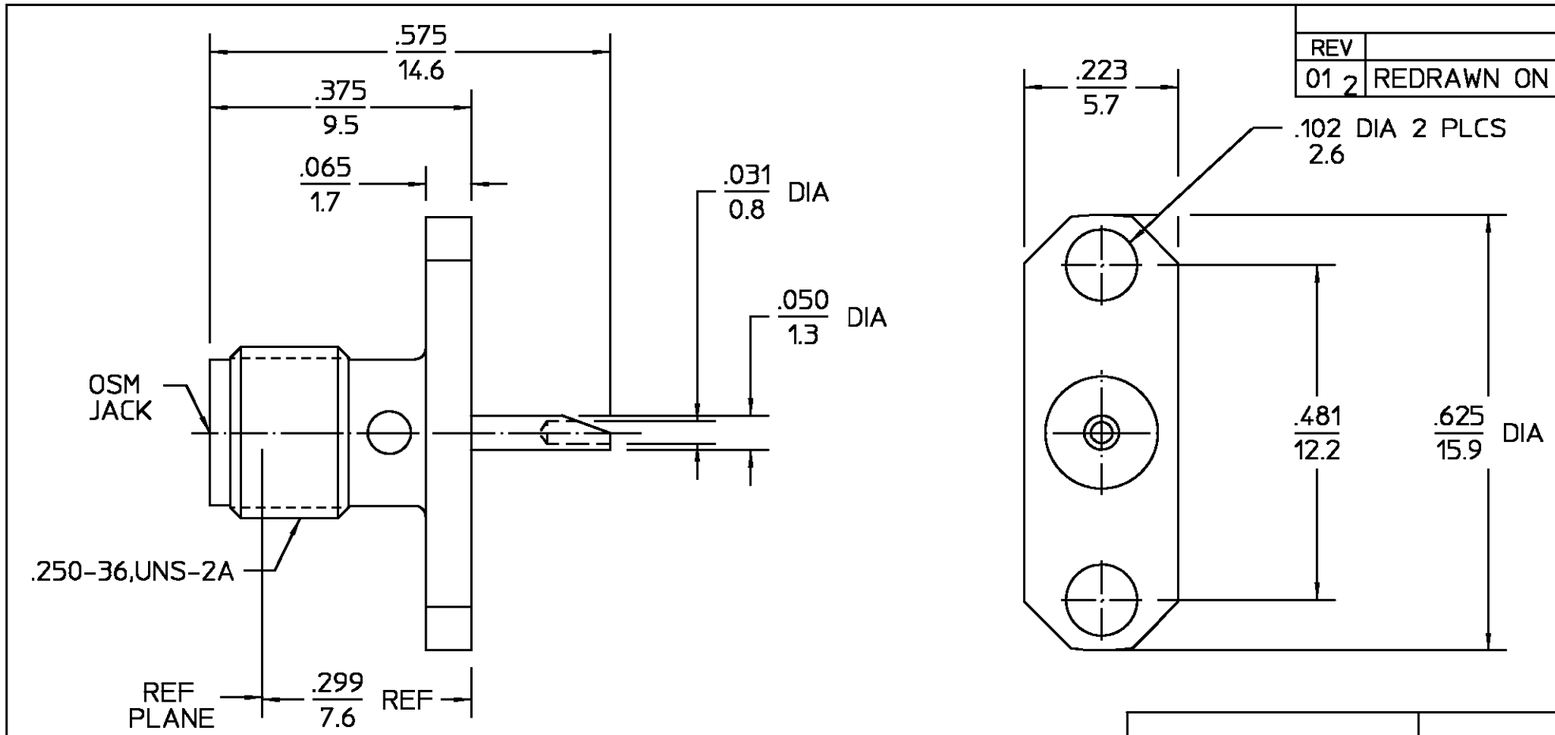

ELECTRICAL	MECHANICAL	ENVIRONMENTAL
Nominal Impedance (Ohms) 50	Interface Dimensions MIL-STD-348, Fig.310-2	Temperature Rating -65°C To 105°C
Frequency Range (GHz) DC to 18	Recommended Mating Torque 7-10 In-Lbs	Vibration MIL-STD-202, Method 204 204, Condition B
Volt Rating (VRMS MAX) @ Sea Level 85	Mating Characteristics: Insertion (MAX Lbs) 2.0	Shock MIL-STD-202, Method 213, Condition I
VSWR N/A	Withdrawal (MIN Oz) 1.0	Thermal Shock MIL-STD-202, Method 107, Condition A,
Insertion Loss (dB MAX) N/A	Force to Engage and Disengage (In/Lbs MAX) 2	Moisture Resistance MIL-STD-202, Method 106, Except Vibration Shall Be Omitted
RF Leakage (dB MIN) -60dB	Center Contact Captivation Axial (Lbs) 6.0	Corrosion - MIL-STD-202, Method 101, Condition B, 5% salt spray
Corona, 70,000 Ft (VRMS MIN) 250	Radial (In/Oz) 4.0	
Dielectric Withstanding Voltage (VRMS MIN) @ Sea Level 1000	Weight (Grams)	.XXX=INCHES X.X=MILLIMETERS
Contact Resistance (Milliohms MAX) Center Contact 3.0		
Outer Contact 2.0		
Cable to Housing N/A		
RF High Potential @ Sea Level (VRMS MIN @ 5 MHz) 670		
I.R.(Megohms MIN) 5000		

COMPONENT	MATERIAL	FINISH
HOUSING	STAINLESS STEEL PER ASTM-A484 AND ASTM-A582, TYPE 303	PASSIVATE PER ASTM-A380
DIELECTRIC	TFE FLUOROCARBON PER ASTM-D-1457	N/A
CENTER CONTACT	BERYLLIUM COPPER PER ASTM-B 196, ALLOY C17300, CONDITION H	GOLD PLATE PER MIL-G-45204 OVER COPPER PLATE PER MIL-C-14550

UNLESS OTHERWISE SPECIFIED DIMENSIONS ARE IN INCHES
TOLERANCE ON
FRAC. ± 1/64 DEC. ±.005 ANGLES ± 1°

DRAWN BY K.L. DATE 9/22/71
CHECKED BY PRB 9/22/71
APPROVED BY D.NANIA 9/24/71

AMP

AMP Incorporated
140 Fourth Avenue
Waltham, MA 02451-7599

These drawings and specifications are the property of Omni Spectra Incorporated and shall not be reproduced or copied or used in whole or in part as the basis for the manufacture or sale of item(s) without written permission.

USE ASS'Y PROCEDURE

NO. A.P. N/A

TITLE OSM FLANGE MOUNT JACK RECEPTACLE - SOLDER POT TERMINAL

SIZE	CODE IDENT NO.		REV
B	26805	2052-1350-02	01 2
SCALE 5:1			SHEET 1 OF 1

CUSTOMER DRAWING

AMP PART # 1052544-1
SHEET 1 OF 1 REV A

Mouser Electronics

Authorized Distributor

Click to View Pricing, Inventory, Delivery & Lifecycle Information:

TE Connectivity:

2052-1350-02