THIS DRAWING IS UNPUBLISHED. RELEASED FOR PUBLICATION – , – .
© COPYRIGHT – BY – ALL RIGHTS RESERVED.

LOC	DIST
DW	—

REVISIONS

P	LTR	DESCRIPTION	DATE	DWN	APVD
	R	REVISED. (ECR–12–015329)	18FEB13	JC	SC

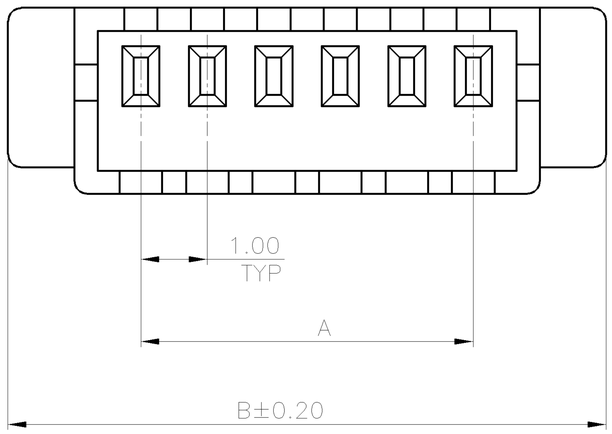

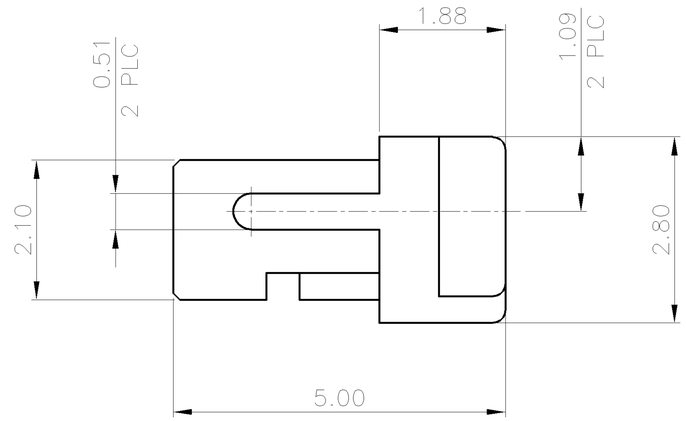

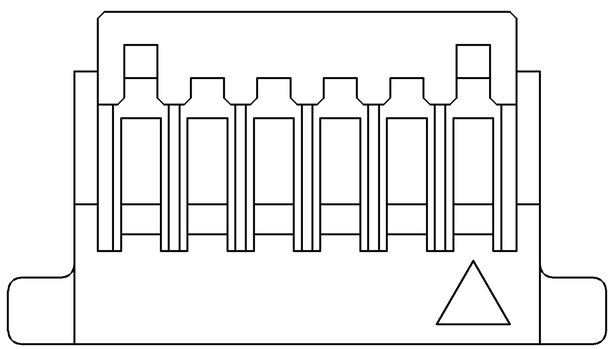

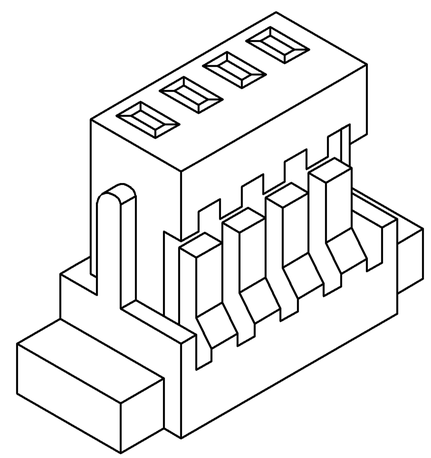

DIM. B	DIM. A	NO. OF CONTACTS	PART NUMBER
18.00	14.00	15	1–1470364–5
17.00	13.00	14	1–1470364–4
16.00	12.00	13	1–1470364–3
15.00	11.00	12	1–1470364–2
14.00	10.00	11	1–1470364–1
13.00	9.00	10	1–1470364–0
12.00	8.00	9	1470364–9
11.00	7.00	8	1470364–8
10.00	6.00	7	1470364–7
9.00	5.00	6	1470364–6
8.00	4.00	5	1470364–5
7.00	3.00	4	1470364–4
6.00	2.00	3	1470364–3
5.00	1.00	2	1470364–2

NOTE:

1. MATERIAL:
   HOUSING: THERMOPLASTIC UL 94V–0.
2. APPLY TERMINAL PART NUMBER: 1470365–X & 1734597–X.
3. PACKAGING: BAG.

THIS DRAWING IS A CONTROLLED DOCUMENT.

DIMENSIONS: MM

TOLERANCES UNLESS OTHERWISE SPECIFIED:

0 PLC	± –
1 PLC	± –
2 PLC	± 0.1
3 PLC	± –
4 PLC	± –
ANGLES	± –

MATERIAL: SEE NOTE

FINISH: SEE NOTE

DWN A. WU 22OCT2002
CHK J. CHENG 22OCT2002
APVD J. WU 22OCT2002

PRODUCT SPEC: 108–57264

APPLICATION SPEC: —

WEIGHT: SEE TABLE

CUSTOMER DRAWING

TE Connectivity

NAME: 1.0 MM PITCH WIRE TO BOARD CONNECTOR, RECEPTACLE, SMT, HOUSING

SIZE	CAGE CODE	DRAWING NO	RESTRICTED TO
A3	00779	C–1470364	—

SCALE: — SHEET 1 OF 2 REV R

THIS DRAWING IS UNPUBLISHED. RELEASED FOR PUBLICATION – , – .
© COPYRIGHT – BY – ALL RIGHTS RESERVED.

LOC	DIST
DW	—

REVISIONS

P	LTR	DESCRIPTION	DATE	DWN	APVD
	–	SEE SHEET 1.	–	–	–

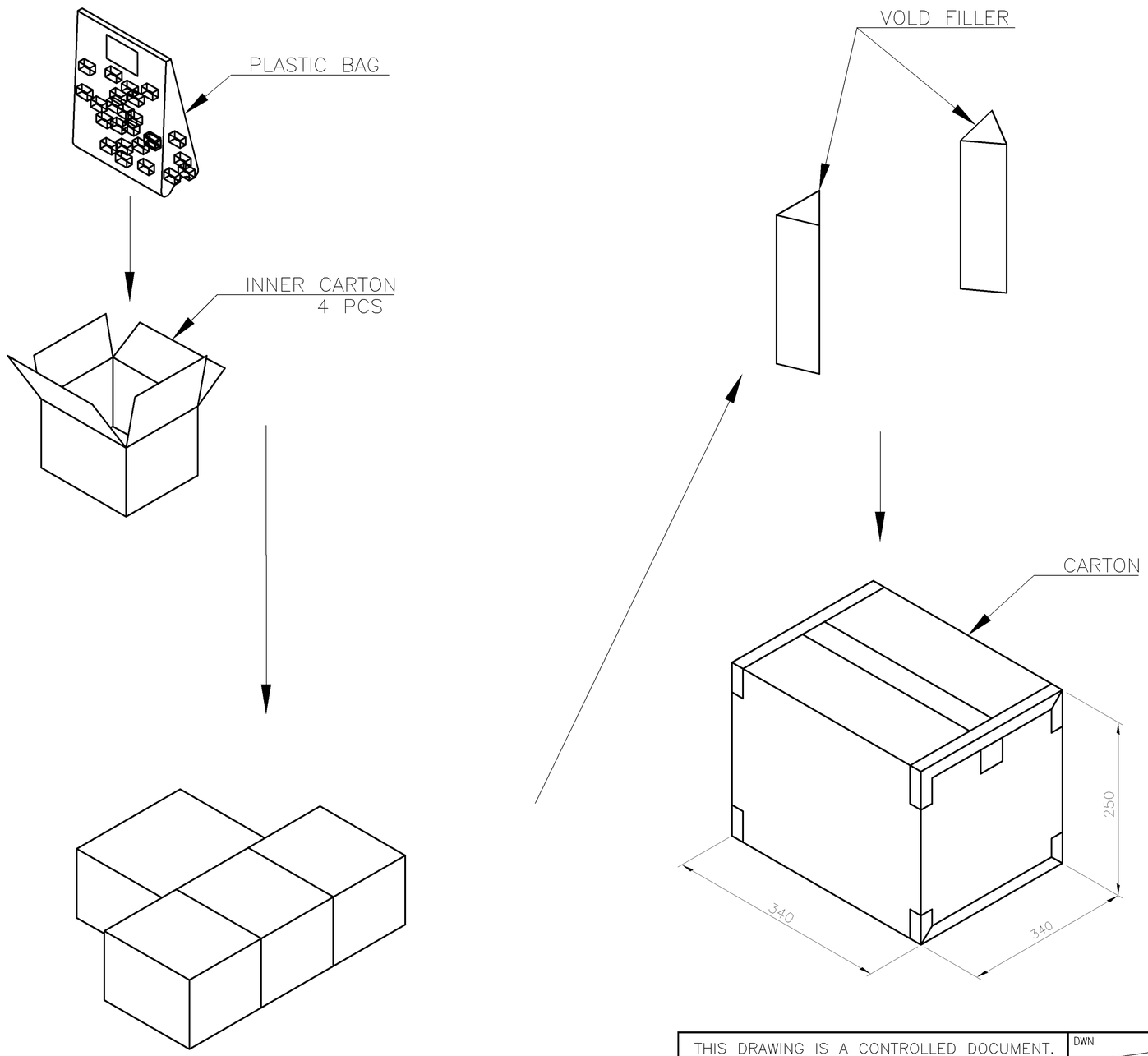

NO. OF CONTACTS	GROSS WEIGHT	NET WEIGHT	QUANTITY
15	4.70 KG	1.98 KG	16000 PCS
14	4.62 KG	1.87 KG	16000 PCS
13	4.53 KG	1.76 KG	16000 PCS
12	4.43 KG	1.65 KG	16000 PCS
11	5.14 KG	2.30 KG	24000 PCS
10	4.95 KG	2.14 KG	24000 PCS
9	4.76 KG	1.97 KG	24000 PCS
8	4.57 KG	1.80 KG	24000 PCS
7	4.38 KG	1.63 KG	24000 PCS
6	3.50 KG	1.95 KG	32000 PCS
5	3.26 KG	1.73 KG	32000 PCS
4	3.06 KG	1.50 KG	32000 PCS
3	2.82 KG	1.28 KG	32000 PCS
2	2.58 KG	1.06 KG	32000 PCS

THIS DRAWING IS A CONTROLLED DOCUMENT.

DIMENSIONS: MM

TOLERANCES UNLESS OTHERWISE SPECIFIED:
0 PLC ± –
1 PLC ± –
2 PLC ± –
3 PLC ± –
4 PLC ± –
ANGLES ± –

MATERIAL: SEE NOTE

FINISH: SEE NOTE

DWN
CHK
APVD
PRODUCT SPEC —
APPLICATION SPEC —
WEIGHT: SEE TABLE

TE Connectivity

NAME: 1.0 MM PITCH WIRE TO BOARD CONNECTOR, RECEPTACLE, SMT, HOUSING

SIZE	CAGE CODE	DRAWING NO	RESTRICTED TO
A3	00779	C-1470364	—

CUSTOMER DRAWING | SCALE — | SHEET 2 OF 2 | REV R

Mouser Electronics

Authorized Distributor

Click to View Pricing, Inventory, Delivery & Lifecycle Information:

TE Connectivity:

1470364-4