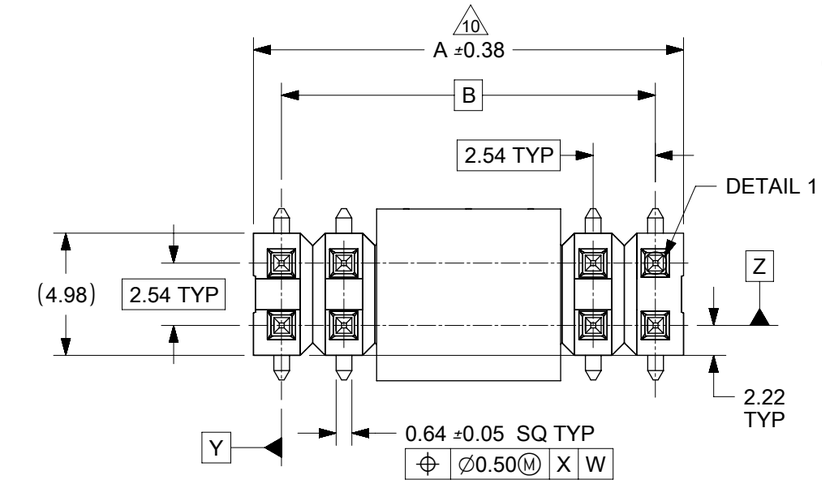

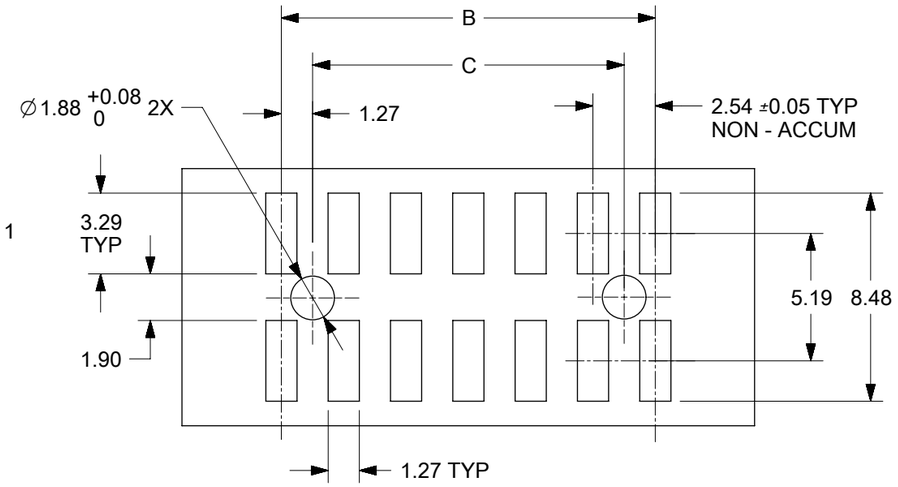

RECOMMENDED PCB LAYOUT

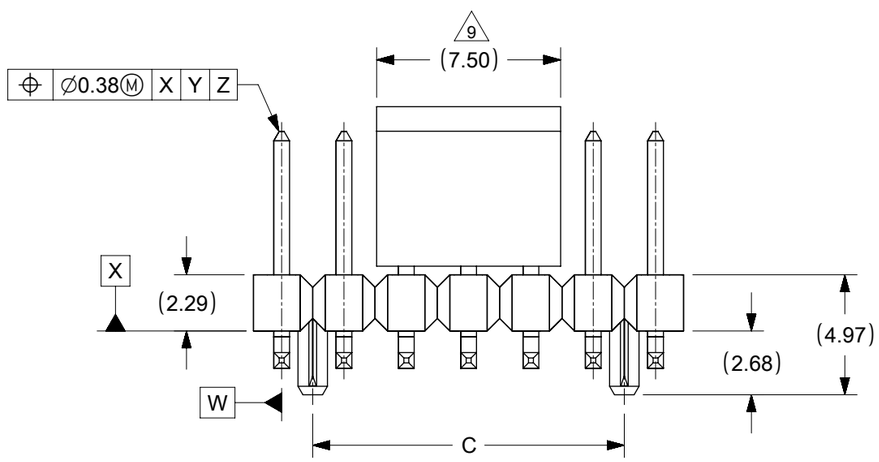

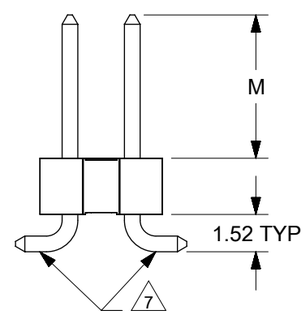

PART WITHOUT PEGS

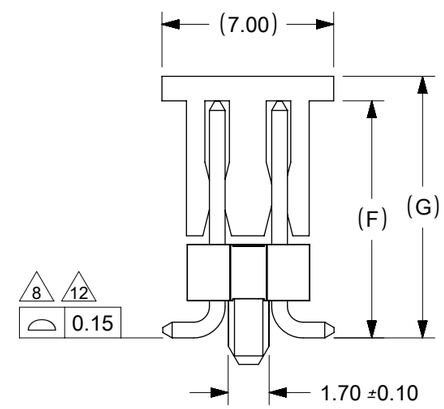

PART WITH PEGS

NOTES:

1. MATERIAL:
   HSG: LCP, GLASS-FILLED, UL94V-0, COLOR: BLACK
   CAP: NYLON, GLASS-FILLED, UL94V-0, COLOR: BLACK
   PIN: 0.64MM SQ, COPPER ALLOY
2. PLATING TYPE:
   (1) : 0.38µm MIN. GOLD PLATE ON CONTACT AND 2.00µm MIN. TIN ON SOLDERTAIL OVER 1.25µm MIN. NICKEL OVERALL.
   (2) : 0.75µm MIN. GOLD PLATE ON CONTACT AND 2.00µm MIN. TIN ON SOLDERTAIL OVER 1.25µm MIN. NICKEL OVERALL.
   (3) : 2.50µm MIN. TIN IN SELECTED AREA OVER 1.25µm MIN. NICKEL OVERALL.
3. PACKAGING TYPE: SEE TABLE
4. RECOMMENDED PCB THICKNESS 1.60±0.10mm
5. PRODUCT SPECIFICATION: PS-87920-019
6. WAFER TO BE FLAT WITHIN 0.003mm/mm
7. BEND DEPRESSION IS ACCEPTED SO LONG AS IT DOES NOT AFFECT THE OVERALL COPLANARITY OF TAIL.
8. COPLANARITY IS TO BE MEASURED BY RESTING THE SOLDER TAIL ON A FLAT SURFACE.
9. CAP LOCATION IS CENTERED ALONG THE MATING ENDS AS SHOWN. TOP SURFACE OF CAP TO BE FLAT FOR THE PURPOSE OF PICK & PLACE CAP BY VACUUM SUCTION NOZZLE.
10. IRREGULAR CIRCUIT CUTOFF WITHIN BREAKAWAY SECTION IS PREMISSIBLE. CUTTING OR CHIPPING OF THE MAIN BODY IS NOT ACCEPTABLE.
11. PARTS ARE NOT STACKABLE ON 2.54 CENTER.
12. COPLANARITY FOR SIZES UP TO 40 IS 0.15MM.
13. THE ABOVE CKT 14 IS FOR ILLUSTRATION PURPOSE ONLY.
14. TUBE LENGTH IS 560MM PER STANDARD.
15. PACKAGING SPECIFICATION:
    TUBE: PK-89990-478
    TAPE & REEL: PK-89990-479
    TRAY: PK-89990-489

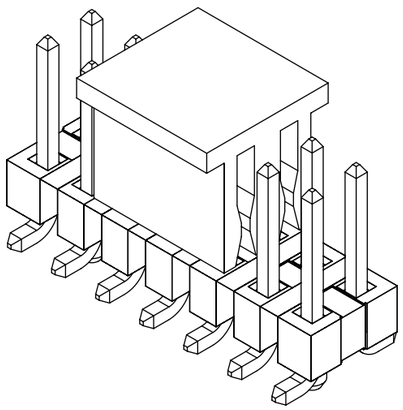

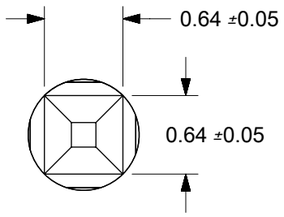

DETAIL 1

THIS DRAWING CONTAINS INFORMATION THAT IS PROPRIETARY TO MOLEX ELECTRONIC TECHNOLOGIES, LLC AND SHOULD NOT BE USED WITHOUT WRITTEN PERMISSION

EC NO: 168769	DRWN: GGUNAGI	CHK'D: KHLIM	APPR: KHLIM
2017/11/23	2018/06/19	2018/06/19
MIGRATED TO NX		
C2	REV	

GENERAL TOLERANCES (UNLESS SPECIFIED)

	MM	INCH
4 PLACES	±	±
3 PLACES	±	±
2 PLACES	± 0.2	±
1 PLACES	±	±
0 PLACES	±	±

ANGULAR TOL ± 3.0

DRAFT WHERE APPLICABLE MUST REMAIN WITHIN DIMENSIONS

DIMENSION UNITS: MM	SCALE: NTS
DRWN BY: SKLIM01	DATE: 2006/05/25
CHK'D BY: PATEY	DATE: 2006/07/05
APPR BY: PATEY	DATE: 2006/07/05
DRAWING SIZE: A3	THIRD ANGLE PROJECTION

molex®

CUSTOM HEADER
C-GRID HDR, SMT W/CAP WITH/WITHOUT LOC. PEGS

PRODUCT CUSTOMER DRAWING

SERIES	MATERIAL NUMBER	CUSTOMER
87920	SEE TABLE	GENERAL MARKET

DOCUMENT NUMBER	DOC TYPE	DOC PART	SHEET NUMBER
SD-87920-001	PSD	001	1 OF 14

RELEASE STATUS	P1	RELEASE DATE	2018/06/19 16:18:34

FORMAT: Met-lega-master-tb-prod-A3
REVISION: C
DATE: 2017/02/06

CIRCUITS POSITION CONFIGURATION

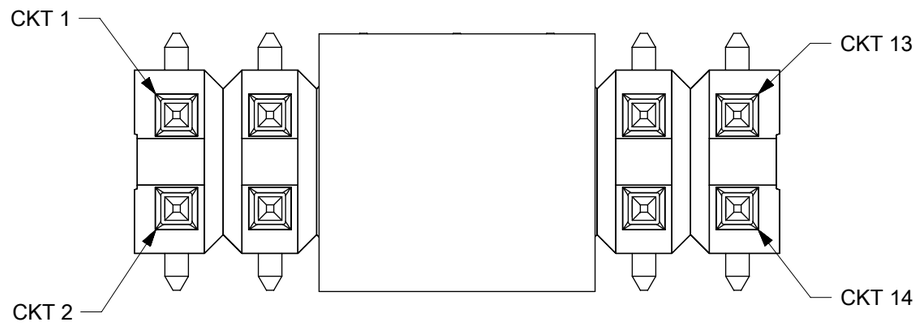

ORIENTATION OF PART IN TUBE

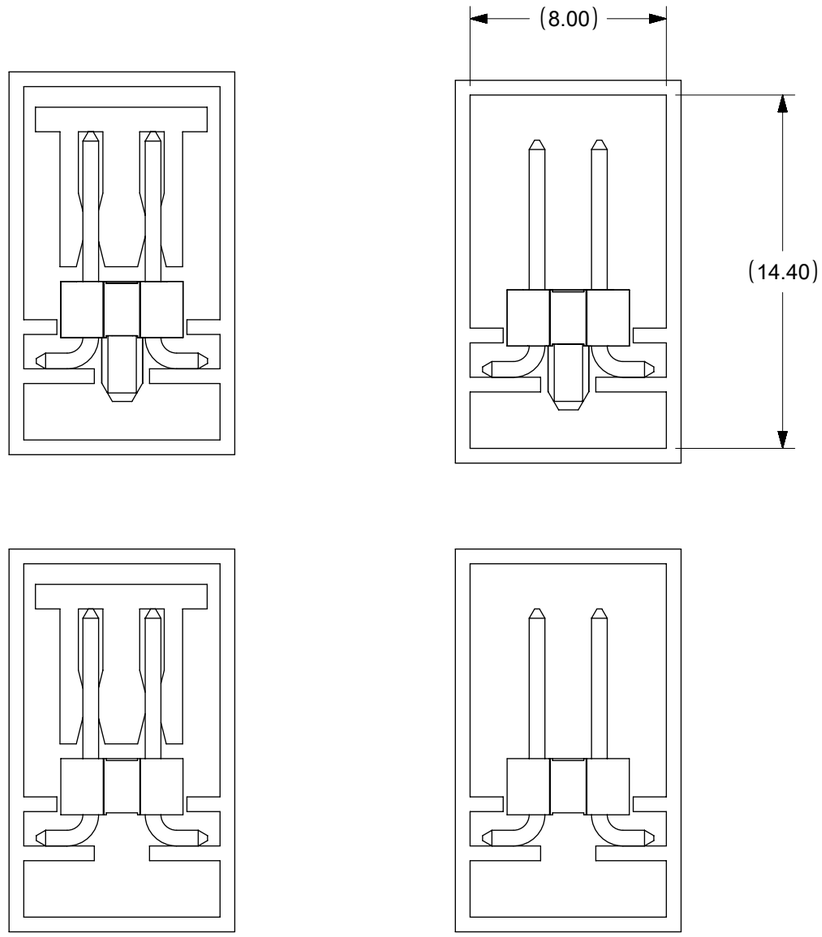

THIS DRAWING CONTAINS INFORMATION THAT IS PROPRIETARY TO MOLEX ELECTRONIC TECHNOLOGIES, LLC AND SHOULD NOT BE USED WITHOUT WRITTEN PERMISSION

MIGRATED TO NX
EC NO: 168769 2017/11/23
DRWN: GGUNAGI 2018/06/19
CHK'D: KHLIM 2018/06/19
APPR: KHLIM

REV: C2

GENERAL TOLERANCES (UNLESS SPECIFIED)

	MM	INCH
4 PLACES	±	±
3 PLACES	±	±
2 PLACES	± 0.2	±
1 PLACES	±	±
0 PLACES	±	±

ANGULAR TOL ± 3.0

DRAFT WHERE APPLICABLE MUST REMAIN WITHIN DIMENSIONS

DIMENSION UNITS	SCALE
MM	NTS

DRWN BY	DATE
SKLIM01	2006/05/25
CHK'D BY	DATE
PATEY	2006/07/05
APPR BY	DATE
PATEY	2006/07/05

DRAWING SIZE: A3

THIRD ANGLE PROJECTION

molex®

CUSTOM HEADER
C-GRID HDR, SMT W/CAP WITH/WITHOUT LOC. PEGS

PRODUCT CUSTOMER DRAWING

SERIES	MATERIAL NUMBER	CUSTOMER
87920	SEE TABLE	GENERAL MARKET

DOCUMENT NUMBER	DOC TYPE	DOC PART	SHEET NUMBER
SD-87920-001	PSD	001	2 OF 14

RELEASE STATUS	P1	RELEASE DATE	2018/06/19 16:18:34

FORMAT: Met-lega-master-ib-prod-A3
REVISION: C
DATE: 2017/02/06

CKT	Ao	Bo	F	Ko	P1	W
04	7.40	5.40	7.50	10.80	12.00	16.00

THIS TYPE OF CARRIER TAPE IS FOR CKT SIZE 04 ONLY

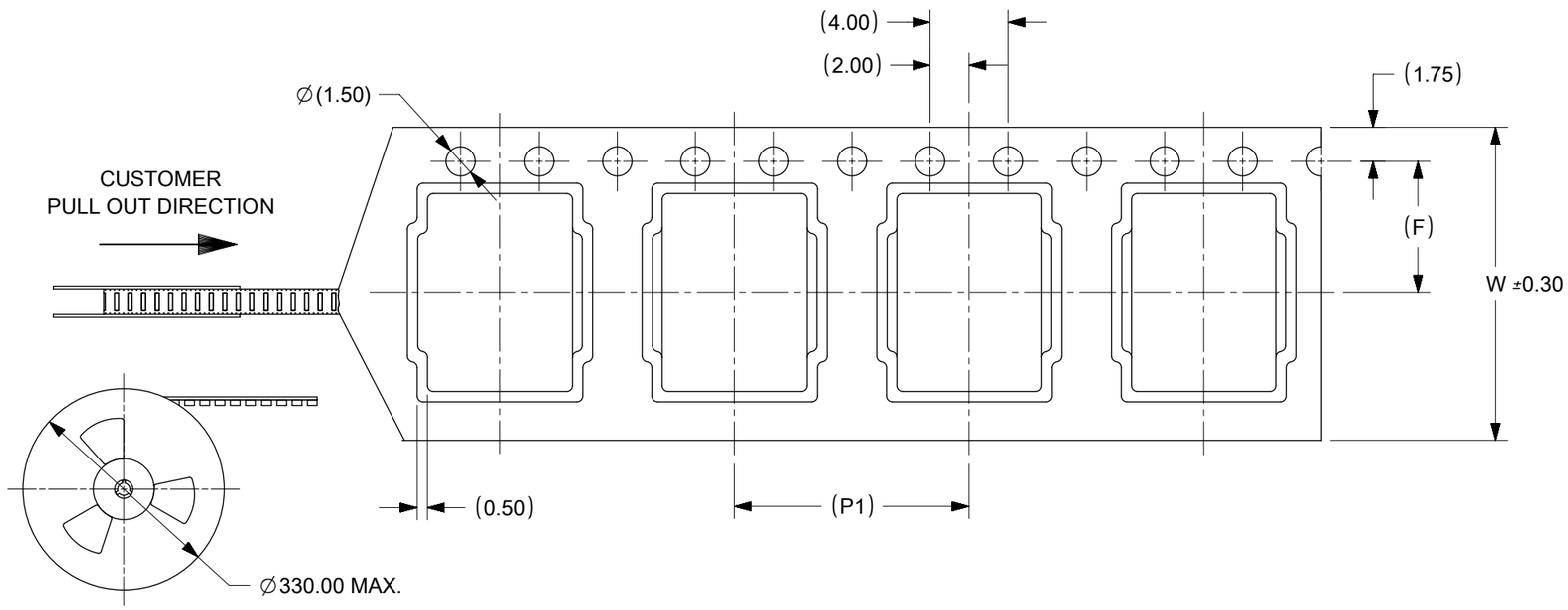

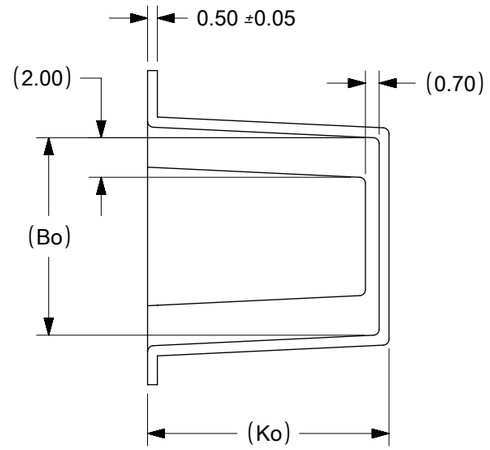

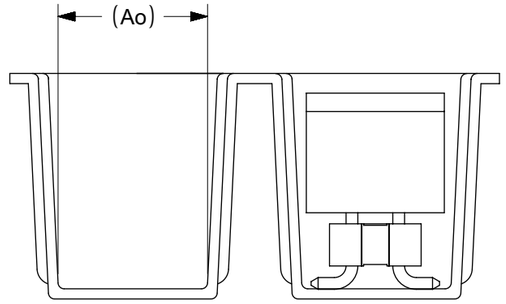

PART PACKED IN
TAPE & REEL
ORIENTATION

NOTES:
1. LEADER AND TRAILER TAPE

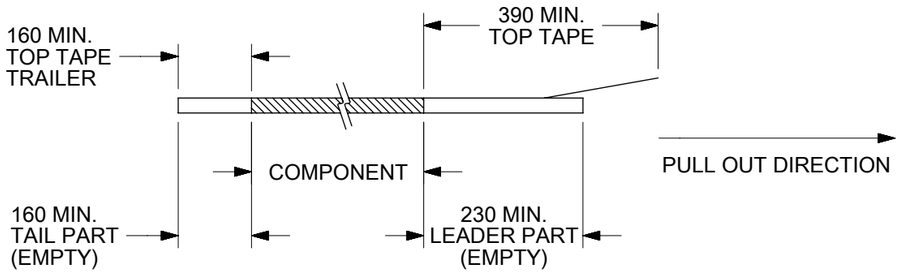

2. PEELING OFF FORCE OF THE TOP TAPE: 20-80gf.
(PEELING DIRECTION AS SHOWN IN FOLLOWING FIGURE)

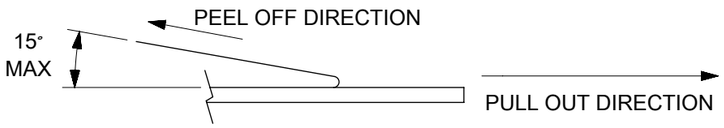

3. PACKAGING STANDARD IS AS PER EIA-481.
4. TAPE & REEL QUANTITY = 500PCS/REEL
5. THE TAPE IS TREATED FOR ANTI-STATIC.

THIS DRAWING CONTAINS INFORMATION THAT IS PROPRIETARY TO MOLEX ELECTRONIC TECHNOLOGIES, LLC AND SHOULD NOT BE USED WITHOUT WRITTEN PERMISSION

MIGRATED TO NX
EC NO: 168769 2017/11/23
DRWN: GGUNAGI 2018/06/19
CHK'D: KHLIM 2018/06/19
APPR: KHLIM

GENERAL TOLERANCES (UNLESS SPECIFIED)

	MM	INCH
4 PLACES	±	±
3 PLACES	±	±
2 PLACES	± 0.2	±
1 PLACES	±	±
0 PLACES	±	±

ANGULAR TOL ± 3.0

DRAFT WHERE APPLICABLE MUST REMAIN WITHIN DIMENSIONS

REV C2

DIMENSION UNITS: MM
SCALE: NTS
DRWN BY: SKLIM01 DATE: 2006/05/25
CHK'D BY: PATEY DATE: 2006/07/05
APPR BY: PATEY DATE: 2006/07/05
DRAWING SIZE: A3
THIRD ANGLE PROJECTION

molex®

CUSTOM HEADER
C-GRID HDR, SMT W/CAP WITH/WITHOUT LOC. PEGS

PRODUCT CUSTOMER DRAWING

SERIES	MATERIAL NUMBER	CUSTOMER
87920	SEE TABLE	GENERAL MARKET

DOCUMENT NUMBER	DOC TYPE	DOC PART	SHEET NUMBER
SD-87920-001	PSD	001	3 OF 14

RELEASE STATUS	P1	RELEASE DATE	2018/06/19 16:18:34

FORMAT: Met-lega-master-tb-prod-A3
REVISION: C
DATE: 2017/02/06

CKT	Ao	Bo	F	Ko	P1	W
06	7.40	8.17	11.50	10.80	12.00	24.00

THIS TYPE OF CARRIER TAPE IS FOR CKT SIZE 06 ONLY

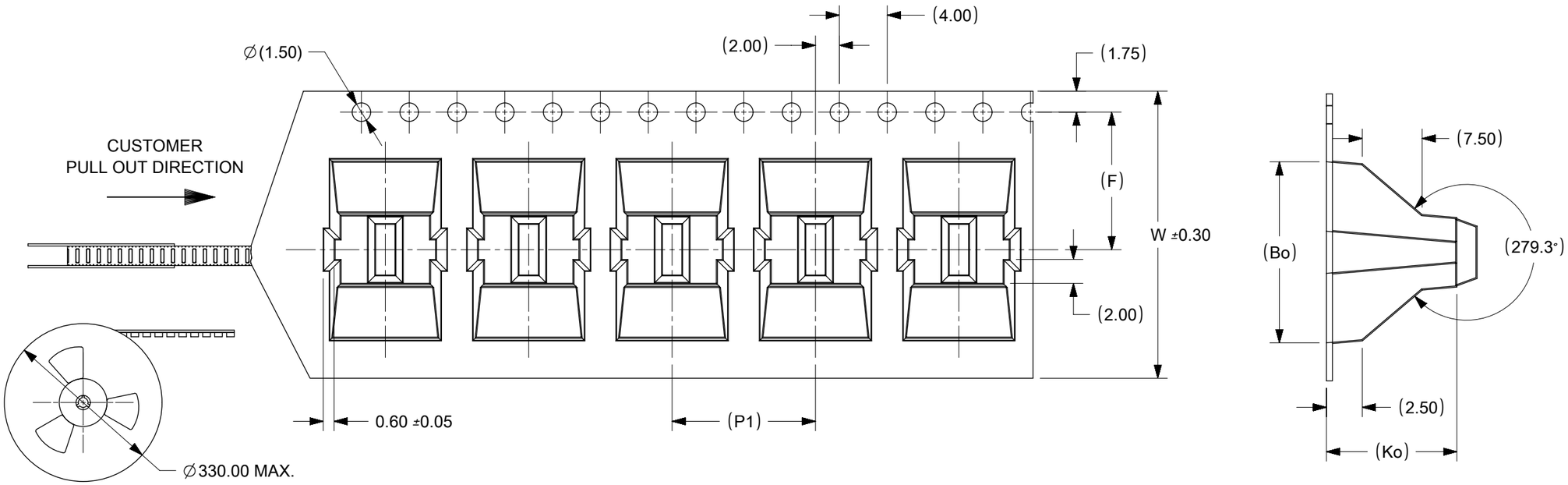

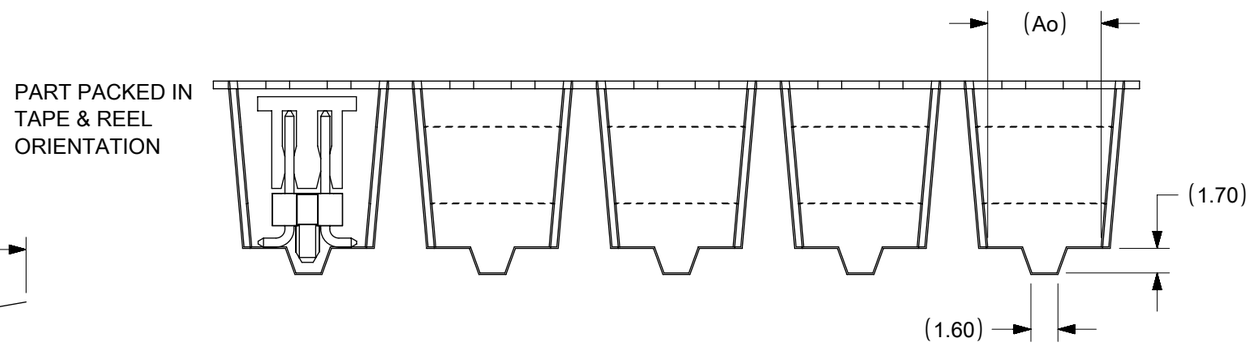

NOTES:

1. LEADER AND TRAILER TAPE

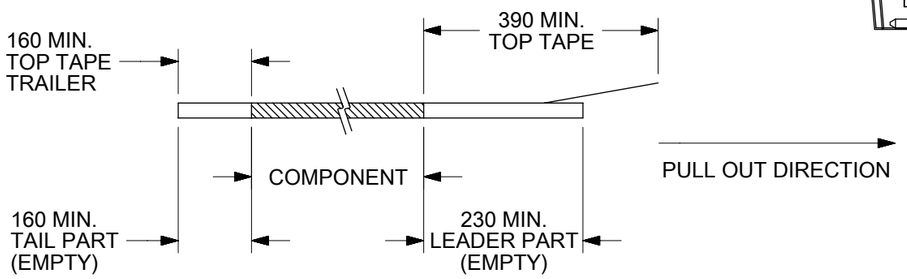

2. PEELING OFF FORCE OF THE TOP TAPE: 20-80gf.
   (PEELING DIRECTION AS SHOWN IN FOLLOWING FIGURE)

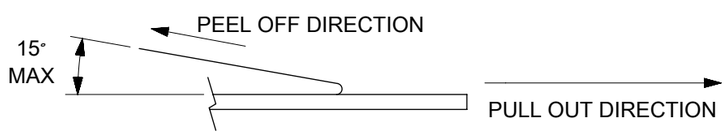

3. PACKAGING STANDARD IS AS PER EIA-481.
4. TAPE & REEL QUANTITY = 440PCS/REEL
5. THE TAPE IS TREATED FOR ANTI-STATIC.

THIS DRAWING CONTAINS INFORMATION THAT IS PROPRIETARY TO MOLEX ELECTRONIC TECHNOLOGIES, LLC AND SHOULD NOT BE USED WITHOUT WRITTEN PERMISSION

EC NO: 168769	DRWN: GGUNAGI	2017/11/23
CHK'D: KHLIM	APPR: KHLIM	2018/06/19
MIGRATED TO NX		2018/06/19

C2 REV

GENERAL TOLERANCES (UNLESS SPECIFIED)

	MM	INCH
4 PLACES	±	±
3 PLACES	±	±
2 PLACES	± 0.2	±
1 PLACES	±	±
0 PLACES	±	±

ANGULAR TOL ± 3.0

DRAFT WHERE APPLICABLE MUST REMAIN WITHIN DIMENSIONS

DIMENSION UNITS	SCALE
MM	NTS
DRWN BY: SKLIM01	DATE: 2006/05/25
CHK'D BY: PATEY	DATE: 2006/07/05
APPR BY: PATEY	DATE: 2006/07/05
DRAWING SIZE: A3	THIRD ANGLE PROJECTION

molex®

CUSTOM HEADER
C-GRID HDR, SMT W/CAP WITH/WITHOUT LOC. PEGS

PRODUCT CUSTOMER DRAWING

SERIES	MATERIAL NUMBER	CUSTOMER
87920	SEE TABLE	GENERAL MARKET

DOCUMENT NUMBER	DOC TYPE	DOC PART	SHEET NUMBER
SD-87920-001	PSD	001	4 OF 14

RELEASE STATUS	P1	RELEASE DATE	2018/06/19 16:18:34

FORMAT: Met-lega-master-tb-prod-A3
REVISION: C
DATE: 2017/02/06

CKT	Ao	Bo	F	Ko	P1	W
08	7.40	10.70	11.50	10.80	12.00	24.00
10	7.40	13.25	11.50	10.80	12.00	24.00

THIS TYPE OF CARRIER TAPE IS FOR CKT SIZE 08 AND 10

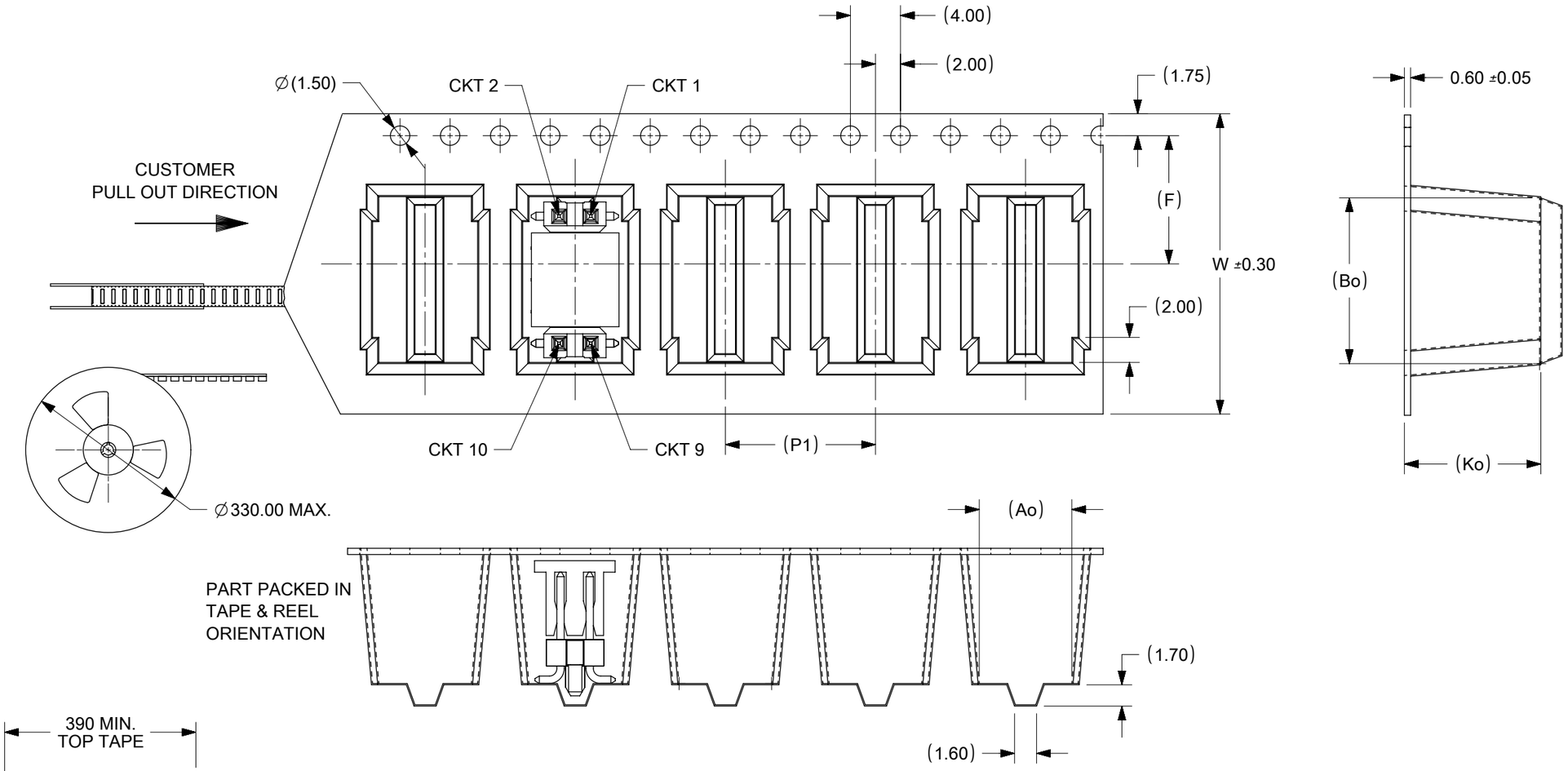

NOTES:

1. LEADER AND TRAILER TAPE

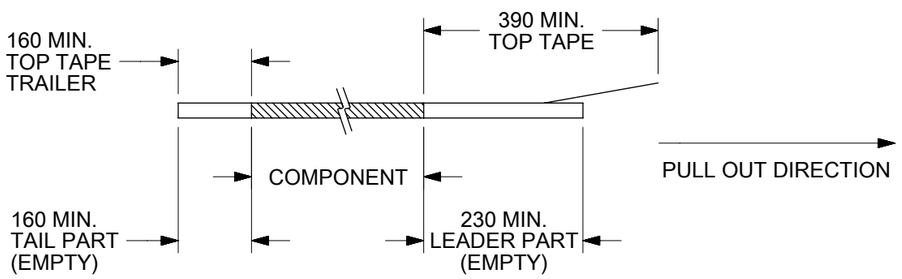

2. PEELING OFF FORCE OF THE TOP TAPE: 20-80gf.
   (PEELING DIRECTION AS SHOWN IN FOLLOWING FIGURE)

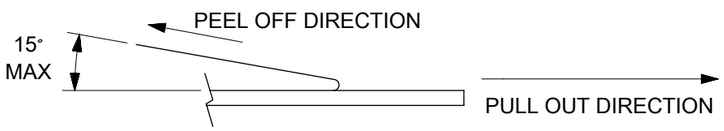

3. PACKAGING STANDARD IS AS PER EIA-481.
4. TAPE & REEL QUANTITY = 440PCS/REEL
5. THE TAPE IS TREATED FOR ANTI-STATIC.
6. FOR ILLUSTRATION PURPOSE, 10CKT IS SHOWN.

THIS DRAWING CONTAINS INFORMATION THAT IS PROPRIETARY TO MOLEX ELECTRONIC TECHNOLOGIES, LLC AND SHOULD NOT BE USED WITHOUT WRITTEN PERMISSION

MIGRATED TO NX
EC NO: 168769 2017/11/23
DRWN: GGUNAGI 2018/06/19
CHK'D: KHLIM 2018/06/19
APPR: KHLIM

GENERAL TOLERANCES (UNLESS SPECIFIED)

	MM	INCH
4 PLACES	±	±
3 PLACES	±	±
2 PLACES	± 0.2	±
1 PLACES	±	±
0 PLACES	±	±

ANGULAR TOL ± 3.0

DRAFT WHERE APPLICABLE MUST REMAIN WITHIN DIMENSIONS

C2 REV

DIMENSION UNITS: MM
SCALE: NTS
DRWN BY: SKLIM01 DATE: 2006/05/25
CHK'D BY: PATEY DATE: 2006/07/05
APPR BY: PATEY DATE: 2006/07/05
DRAWING SIZE: A3
THIRD ANGLE PROJECTION

molex®

CUSTOM HEADER
C-GRID HDR, SMT W/CAP WITH/WITHOUT LOC. PEGS

PRODUCT CUSTOMER DRAWING

SERIES	MATERIAL NUMBER	CUSTOMER
87920	SEE TABLE	GENERAL MARKET

DOCUMENT NUMBER	DOC TYPE	DOC PART	SHEET NUMBER
SD-87920-001	PSD	001	5 OF 14

RELEASE STATUS	P1	RELEASE DATE	2018/06/19 16:18:34

FORMAT: Met-lega-master-tb-prod-A3
REVISION: C
DATE: 2017/02/06

CKT	Ao	Bo	F	Ko	P1	So	W	C
14	7.40	18.33	14.20	10.80	12.00	28.40	32.00	3.00
16	7.40	20.90	14.20	10.80	12.00	28.40	32.00	3.00
20	7.40	25.95	20.20	10.80	12.00	40.40	44.00	5.00

THIS TYPE OF CARRIER TAPE IS FOR CKT SIZE 14, 16 AND 20

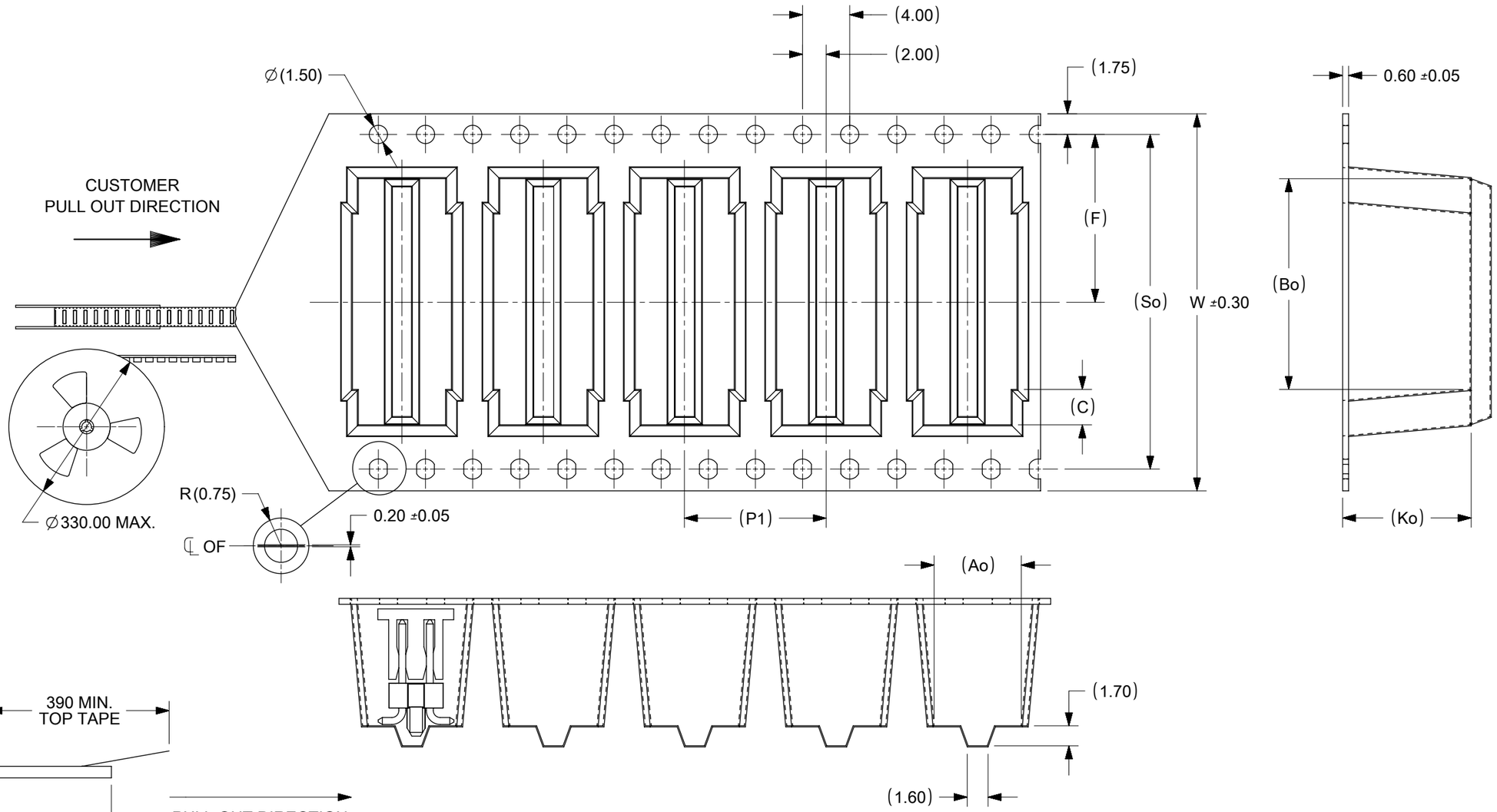

NOTES:

1. LEADER AND TRAILER TAPE

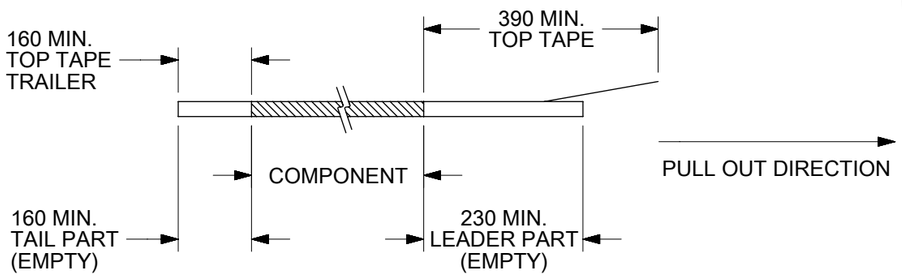

2. PEELING OFF FORCE OF THE TOP TAPE: 20-80gf.
   (PEELING DIRECTION AS SHOWN IN FOLLOWING FIGURE)

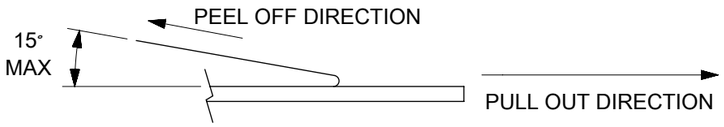

3. PACKAGING STANDARD IS AS PER EIA-481.
4. TAPE & REEL QUANTITY = 440PCS/REEL
5. THE TAPE IS TREATED FOR ANTI-STATIC.

THIS DRAWING CONTAINS INFORMATION THAT IS PROPRIETARY TO MOLEX ELECTRONIC TECHNOLOGIES, LLC AND SHOULD NOT BE USED WITHOUT WRITTEN PERMISSION

MIGRATED TO NX
EC NO: 168769 2017/11/23
DRWN: GGUNAGI 2018/06/19
CHK'D: KHLIM 2018/06/19
APPR: KHLIM

GENERAL TOLERANCES (UNLESS SPECIFIED)

	MM	INCH
4 PLACES	±	±
3 PLACES	±	±
2 PLACES	± 0.2	±
1 PLACES	±	±
0 PLACES	±	±

ANGULAR TOL ± 3.0

DRAFT WHERE APPLICABLE MUST REMAIN WITHIN DIMENSIONS

C2 REV

DIMENSION UNITS: MM
SCALE: NTS
DRWN BY: SKLIM01 DATE: 2006/05/25
CHK'D BY: PATEY DATE: 2006/07/05
APPR BY: PATEY DATE: 2006/07/05
DRAWING SIZE: A3
THIRD ANGLE PROJECTION

molex®

CUSTOM HEADER
C-GRID HDR, SMT W/CAP WITH/WITHOUT LOC. PEGS

PRODUCT CUSTOMER DRAWING

SERIES	MATERIAL NUMBER	CUSTOMER
87920	SEE TABLE	GENERAL MARKET

DOCUMENT NUMBER	DOC TYPE	DOC PART	SHEET NUMBER
SD-87920-001	PSD	001	6 OF 14

RELEASE STATUS	P1	RELEASE DATE	2018/06/19 16:18:34

FORMAT: Met-lega-master-tb-prod-A3
REVISION: C
DATE: 2017/02/06

CKT	Ao	Bo	F	kO	P1	So	W
40	7.60	51.60	34.20	11.30	16.00	68.50	72.00

THIS TYPE OF CARRIER TAPE IS FOR CKT SIZE 40 ONLY

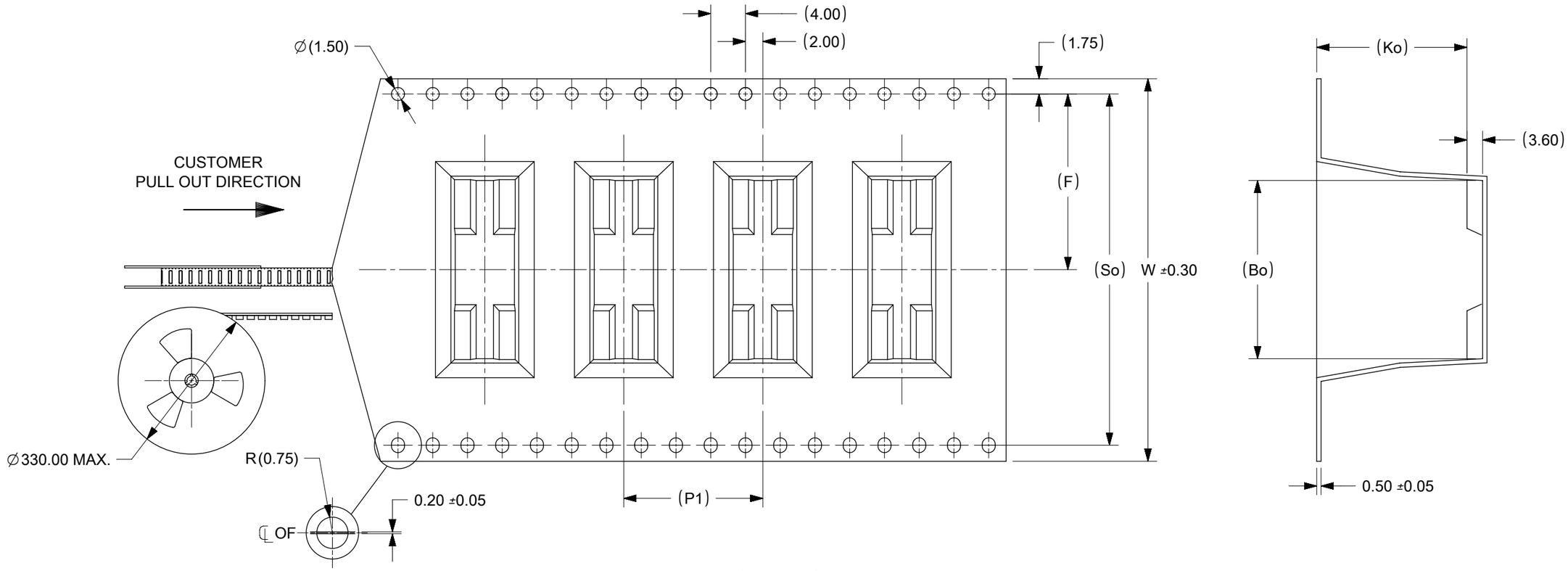

NOTES:

1. LEADER AND TRAILER TAPE

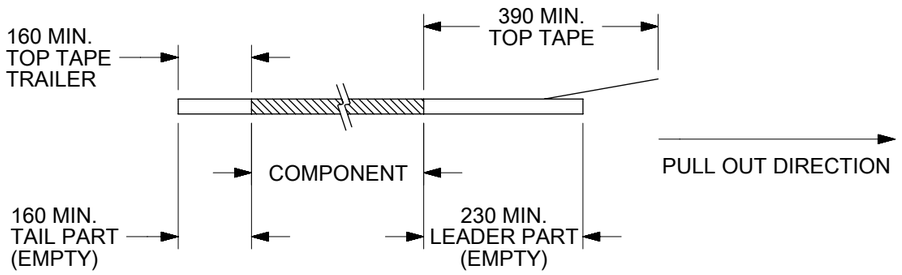

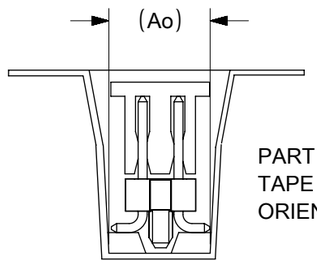

PART PACKED IN
TAPE & REEL
ORIENTATION

2. PEELING OFF FORCE OF THE TOP TAPE: 20-80gf.
   (PEELING DIRECTION AS SHOWN IN FOLLOWING FIGURE)

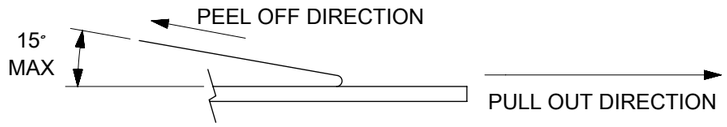

3. PACKAGING STANDARD IS AS PER EIA-481.
4. TAPE & REEL QUANTITY = 250PCS/REEL
5. THE TAPE IS TREATED FOR ANTI-STATIC.

THIS DRAWING CONTAINS INFORMATION THAT IS PROPRIETARY TO MOLEX ELECTRONIC TECHNOLOGIES, LLC AND SHOULD NOT BE USED WITHOUT WRITTEN PERMISSION

MIGRATED TO NX
EC NO: 168769 2017/11/23
DRWN: GGUNAGI 2018/06/19
CHK'D: KHLIM 2018/06/19
APPR: KHLIM

GENERAL TOLERANCES (UNLESS SPECIFIED)	MM	INCH
4 PLACES	±	±
3 PLACES	±	±
2 PLACES	± 0.2	±
1 PLACES	±	±
0 PLACES	±	±
ANGULAR TOL ± 3.0		

DRAFT WHERE APPLICABLE MUST REMAIN WITHIN DIMENSIONS

REV C2

DIMENSION UNITS: MM
SCALE: NTS
DRWN BY: SKLIM01 DATE: 2006/05/25
CHK'D BY: PATEY DATE: 2006/07/05
APPR BY: PATEY DATE: 2006/07/05
DRAWING SIZE: A3
THIRD ANGLE PROJECTION

molex®

CUSTOM HEADER
C-GRID HDR, SMT W/CAP WITH/WITHOUT LOC. PEGS

PRODUCT CUSTOMER DRAWING

SERIES	MATERIAL NUMBER	CUSTOMER
87920	SEE TABLE	GENERAL MARKET

DOCUMENT NUMBER	DOC TYPE	DOC PART	SHEET NUMBER
SD-87920-001	PSD	001	7 OF 14

RELEASE STATUS	P1	RELEASE DATE	2018/06/19 16:18:34

FORMAT: Met-lega-master-tb-prod-A3
REVISION: C
DATE: 2017/02/06

PART NUMBER IN PACKAGING OPTION		CKT SIZE	PEG	PLATE OPT.	DIMENSION					
TAPE & REEL WITH CAP	TRAY W/O CAP				A	B	C	M	F	G
87920-0401	87920-0411	4	N	1	5.08	2.54	---	5.84	9.65	10.66
87920-0402	87920-0412	4	N	2	5.08	2.54	---	5.84	9.65	10.66
87920-0403	87920-0413	4	N	3	5.08	2.54	---	5.84	9.65	10.66
87920-0431	87920-0441	4	N	1	5.08	2.54		3.05	6.86	10.31
87920-0432	87920-0442	4	N	2	5.08	2.54	---	3.05	6.86	10.31
87920-0433	87920-0443	4	N	3	5.08	2.54	---	3.05	6.86	10.31
87920-0601	87920-0611	6	N	1	7.62	5.08	---	5.84	9.65	10.66
87920-0602	87920-0612	6	N	2	7.62	5.08	---	5.84	9.65	10.66
87920-0603	87920-0613	6	N	3	7.62	5.08	---	5.84	9.65	10.66
87920-0631	87920-0614	6	N	1	7.62	5.08		3.05	6.86	10.31
87920-0632	87920-0615	6	N	2	7.62	5.08	---	3.05	6.86	10.31
87920-0633	87920-0616	6	N	3	7.62	5.08	---	3.05	6.86	10.31

THIS DRAWING CONTAINS INFORMATION THAT IS PROPRIETARY TO MOLEX ELECTRONIC TECHNOLOGIES, LLC AND SHOULD NOT BE USED WITHOUT WRITTEN PERMISSION

MIGRATED TO NX
EC NO: 168769 2017/11/23
DRWN: GGUNAGI 2018/06/19
CHK'D: KHLIM 2018/06/19
APPR: KHLIM

REV: C2

GENERAL TOLERANCES (UNLESS SPECIFIED)

	MM	INCH
4 PLACES	±	±
3 PLACES	±	±
2 PLACES	± 0.2	±
1 PLACES	±	±
0 PLACES	±	±

ANGULAR TOL ± 3.0

DRAFT WHERE APPLICABLE MUST REMAIN WITHIN DIMENSIONS

DIMENSION UNITS: MM
SCALE: NTS
DRWN BY: SKLIM01 DATE: 2006/05/25
CHK'D BY: PATEY DATE: 2006/07/05
APPR BY: PATEY DATE: 2006/07/05
DRAWING SIZE: A3
THIRD ANGLE PROJECTION

molex®

CUSTOM HEADER
C-GRID HDR, SMT W/CAP WITH/WITHOUT LOC. PEGS

PRODUCT CUSTOMER DRAWING

SERIES	MATERIAL NUMBER	CUSTOMER
87920	SEE TABLE	GENERAL MARKET

DOCUMENT NUMBER	DOC TYPE	DOC PART	SHEET NUMBER
SD-87920-001	PSD	001	8 OF 14

RELEASE STATUS	P1	RELEASE DATE	2018/06/19 16:18:34

FORMAT: Met-lega-master-tb-prod-A3
REVISION: C
DATE: 2017/02/06

PART NUMBER IN PACKAGING OPTION			CKT SIZE	VOID	PEG	PLATE OPT.	DIMENSION					
TAPE & REEL WITH CAP	TUBE WITHOUT CAP	TUBE WITH CAP					A	B	C	M	F	G
87920-0801	87920-0811	87920-0821	8	---	N	1	10.16	7.62	---	5.84	9.65	10.66
87920-0802	87920-0812	87920-0822	8	---	N	2	10.16	7.62	---	5.84	9.65	10.66
87920-0803	87920-0813	87920-0823	8	---	N	3	10.16	7.62	---	5.84	9.65	10.66
87920-0804	87920-0814	87920-0824	8	---	Y	1	10.16	7.62	5.08	5.84	9.65	10.66
87920-0805	87920-0815	87920-0825	8	---	Y	2	10.16	7.62	5.08	5.84	9.65	10.66
87920-0806	87920-0816	87920-0826	8	---	Y	3	10.16	7.62	5.08	5.84	9.65	10.66
87920-9801	87920-9802	87920-9803	8	1.6	N	1	10.16	7.62	---	5.84	9.65	10.66
87920-1001	87920-1011	87920-1021	10	---	N	1	12.70	10.16	---	5.84	9.65	10.66
87920-1002	87920-1012	87920-1022	10	---	N	2	12.70	10.16	---	5.84	9.65	10.66
87920-1003	87920-1013	87920-1023	10	---	N	3	12.70	10.16	---	5.84	9.65	10.66
87920-1004	87920-1014	87920-1024	10	---	Y	1	12.70	10.16	7.62	5.84	9.65	10.66
87920-1005	87920-1015	87920-1025	10	---	Y	2	12.70	10.16	7.62	5.84	9.65	10.66
87920-1006	87920-1016	87920-1026	10	---	Y	3	12.70	10.16	7.62	5.84	9.65	10.66
------	87920-1211	87920-1221	12	---	N	1	15.24	12.70	---	5.84	9.65	10.66
------	87920-1212	87920-1222	12	---	N	2	15.24	12.70	---	5.84	9.65	10.66
------	87920-1213	87920-1223	12	---	N	3	15.24	12.70	---	5.84	9.65	10.66
------	87920-1214	87920-1224	12	---	Y	1	15.24	12.70	10.16	5.84	9.65	10.66
------	87920-1215	87920-1225	12	---	Y	2	15.24	12.70	10.16	5.84	9.65	10.66
------	87920-1216	87920-1226	12	---	Y	3	15.24	12.70	10.16	5.84	9.65	10.66

PART NUMBER IN PACKAGING OPTION			CKT SIZE	PEG	PLATE OPT.	DIMENSION					
TAPE & REEL WITH CAP	TUBE WITHOUT CAP	TUBE WITH CAP				A	B	C	M	F	G
87920-0831	87920-0841	87920-0851	8	N	1	10.16	7.62	---	3.05	6.86	10.31
87920-0832	87920-0842	87920-0852	8	N	2	10.16	7.62	---	3.05	6.86	10.31
87920-0833	87920-0843	87920-0853	8	N	3	10.16	7.62	---	3.05	6.86	10.31
87920-0834	87920-0844	87920-0854	8	Y	1	10.16	7.62	5.08	3.05	6.86	10.31
87920-0835	87920-0845	87920-0855	8	Y	2	10.16	7.62	5.08	3.05	6.86	10.31
87920-0836	87920-0846	87920-0856	8	Y	3	10.16	7.62	5.08	3.05	6.86	10.31
87920-1031	87920-1041	87920-1051	10	N	1	12.70	10.16	---	3.05	6.86	10.31
87920-1032	87920-1042	87920-1052	10	N	2	12.70	10.16	---	3.05	6.86	10.31
87920-1033	87920-1043	87920-1053	10	N	3	12.70	10.16	---	3.05	6.86	10.31
87920-1034	87920-1044	87920-1054	10	Y	1	12.70	10.16	7.62	3.05	6.86	10.31
87920-1035	87920-1045	87920-1055	10	Y	2	12.70	10.16	7.62	3.05	6.86	10.31
87920-1036	87920-1046	87920-1056	10	Y	3	12.70	10.16	7.62	3.05	6.86	10.31
------	87920-1241	87920-1251	12	N	1	15.24	12.70	---	3.05	6.86	10.31
------	87920-1242	87920-1252	12	N	2	15.24	12.70	---	3.05	6.86	10.31
------	87920-1243	87920-1253	12	N	3	15.24	12.70	---	3.05	6.86	10.31
------	87920-1244	87920-1254	12	Y	1	15.24	12.70	10.16	3.05	6.86	10.31
------	87920-1245	87920-1255	12	Y	2	15.24	12.70	10.16	3.05	6.86	10.31
------	87920-1246	87920-1256	12	Y	3	15.24	12.70	10.16	3.05	6.86	10.31

THIS DRAWING CONTAINS INFORMATION THAT IS PROPRIETARY TO MOLEX ELECTRONIC TECHNOLOGIES, LLC AND SHOULD NOT BE USED WITHOUT WRITTEN PERMISSION

MIGRATED TO NX
EC NO: 168769 2017/11/23
DRWN: GGUNAGI 2018/06/19
CHK'D: KHLIM 2018/06/19
APPR: KHLIM

GENERAL TOLERANCES (UNLESS SPECIFIED)

	MM	INCH
4 PLACES	±	±
3 PLACES	±	±
2 PLACES	± 0.2	±
1 PLACES	±	±
0 PLACES	±	±

ANGULAR TOL ± 3.0

DRAFT WHERE APPLICABLE MUST REMAIN WITHIN DIMENSIONS

REV C2

DIMENSION UNITS: MM
SCALE: NTS
DRWN BY: SKLIM01 DATE: 2006/05/25
CHK'D BY: PATEY DATE: 2006/07/05
APPR BY: PATEY DATE: 2006/07/05
DRAWING SIZE: A3
THIRD ANGLE PROJECTION

molex®

CUSTOM HEADER
C-GRID HDR, SMT W/CAP WITH/WITHOUT LOC. PEGS

PRODUCT CUSTOMER DRAWING

SERIES	MATERIAL NUMBER	CUSTOMER
87920	SEE TABLE	GENERAL MARKET

DOCUMENT NUMBER	DOC TYPE	DOC PART	SHEET NUMBER
SD-87920-001	PSD	001	9 OF 14

RELEASE STATUS	P1	RELEASE DATE	2018/06/19 16:18:34

FORMAT: Met-lega-master-tb-prod-A3
REVISION: C
DATE: 2017/02/06

PART NUMBER IN PACKAGING OPTION			CKT SIZE	PEG	PLATE OPT.	DIMENSION					
TAPE & REEL WITH CAP	TUBE WITHOUT CAP	TUBE WITH CAP				A	B	C	M	F	G
87920-1401	87920-1411	87920-1421	14	N	1	17.78	15.24	---	5.84	9.65	10.66
87920-1402	87920-1412	87920-1422	14	N	2	17.78	15.24	---	5.84	9.65	10.66
87920-1403	87920-1413	87920-1423	14	N	3	17.78	15.24	---	5.84	9.65	10.66
87920-1404	87920-1414	87920-1424	14	Y	1	17.78	15.24	12.70	5.84	9.65	10.66
87920-1405	87920-1415	87920-1425	14	Y	2	17.78	15.24	12.70	5.84	9.65	10.66
87920-1406	87920-1416	87920-1426	14	Y	3	17.78	15.24	12.70	5.84	9.65	10.66
87920-1601	87920-1611	87920-1621	16	N	1	20.32	17.78	---	5.84	9.65	10.66
87920-1602	87920-1612	87920-1622	16	N	2	20.32	17.78	---	5.84	9.65	10.66
87920-1603	87920-1613	87920-1623	16	N	3	20.32	17.78	---	5.84	9.65	10.66
87920-1604	87920-1614	87920-1624	16	Y	1	20.32	17.78	15.24	5.84	9.65	10.66
87920-1605	87920-1615	87920-1625	16	Y	2	20.32	17.78	15.24	5.84	9.65	10.66
87920-1606	87920-1616	87920-1626	16	Y	3	20.32	17.78	15.24	5.84	9.65	10.66
------	87920-1811	87920-1821	18	N	1	22.86	20.32	---	5.84	9.65	10.66
------	87920-1812	87920-1822	18	N	2	22.86	20.32	---	5.84	9.65	10.66
------	87920-1813	87920-1823	18	N	3	22.86	20.32	---	5.84	9.65	10.66
------	87920-1814	87920-1824	18	Y	1	22.86	20.32	17.78	5.84	9.65	10.66
------	87920-1815	87920-1825	18	Y	2	22.86	20.32	17.78	5.84	9.65	10.66
------	87920-1816	87920-1826	18	Y	3	22.86	20.32	17.78	5.84	9.65	10.66

PART NUMBER IN PACKAGING OPTION			CKT SIZE	PEG	PLATE OPT.	DIMENSION					
TAPE & REEL WITH CAP	TUBE WITHOUT CAP	TUBE WITH CAP				A	B	C	M	F	G
87920-1431	87920-1441	87920-1451	14	N	1	17.78	15.24	---	3.05	6.86	10.31
87920-1432	87920-1442	87920-1452	14	N	2	17.78	15.24	---	3.05	6.86	10.31
87920-1433	87920-1443	87920-1453	14	N	3	17.78	15.24	---	3.05	6.86	10.31
87920-1434	87920-1444	87920-1454	14	Y	1	17.78	15.24	12.70	3.05	6.86	10.31
87920-1435	87920-1445	87920-1455	14	Y	2	17.78	15.24	12.70	3.05	6.86	10.31
87920-1436	87920-1446	87920-1456	14	Y	3	17.78	15.24	12.70	3.05	6.86	10.31
87920-1631	87920-1641	87920-1651	16	N	1	20.32	17.78	---	3.05	6.86	10.31
87920-1632	87920-1642	87920-1652	16	N	2	20.32	17.78	---	3.05	6.86	10.31
87920-1633	87920-1643	87920-1653	16	N	3	20.32	17.78	---	3.05	6.86	10.31
87920-1634	87920-1644	87920-1654	16	Y	1	20.32	17.78	15.24	3.05	6.86	10.31
87920-1635	87920-1645	87920-1655	16	Y	2	20.32	17.78	15.24	3.05	6.86	10.31
87920-1636	87920-1646	87920-1656	16	Y	3	20.32	17.78	15.24	3.05	6.86	10.31
------	87920-1841	87920-1851	18	N	1	22.86	20.32	---	3.05	6.86	10.31
------	87920-1842	87920-1852	18	N	2	22.86	20.32	---	3.05	6.86	10.31
------	87920-1843	87920-1853	18	N	3	22.86	20.32	---	3.05	6.86	10.31
------	87920-1844	87920-1854	18	Y	1	22.86	20.32	17.78	3.05	6.86	10.31
------	87920-1845	87920-1855	18	Y	2	22.86	20.32	17.78	3.05	6.86	10.31
------	87920-1846	87920-1856	18	Y	3	22.86	20.32	17.78	3.05	6.86	10.31

THIS DRAWING CONTAINS INFORMATION THAT IS PROPRIETARY TO MOLEX ELECTRONIC TECHNOLOGIES, LLC AND SHOULD NOT BE USED WITHOUT WRITTEN PERMISSION

MIGRATED TO NX
EC NO: 168769 2017/11/23
DRWN: GGUNAGI 2018/06/19
CHK'D: KHLIM 2018/06/19
APPR: KHLIM

REV: C2

GENERAL TOLERANCES (UNLESS SPECIFIED)

	MM	INCH
4 PLACES	±	±
3 PLACES	±	±
2 PLACES	± 0.2	±
1 PLACES	±	±
0 PLACES	±	±

ANGULAR TOL ± 3.0

DRAFT WHERE APPLICABLE MUST REMAIN WITHIN DIMENSIONS

DIMENSION UNITS: MM
SCALE: NTS
DRWN BY: SKLIM01 DATE: 2006/05/25
CHK'D BY: PATEY DATE: 2006/07/05
APPR BY: PATEY DATE: 2006/07/05
DRAWING SIZE: A3
THIRD ANGLE PROJECTION

molex®

CUSTOM HEADER
C-GRID HDR, SMT W/CAP WITH/WITHOUT LOC. PEGS

PRODUCT CUSTOMER DRAWING

SERIES	MATERIAL NUMBER	CUSTOMER
87920	SEE TABLE	GENERAL MARKET

DOCUMENT NUMBER	DOC TYPE	DOC PART	SHEET NUMBER
SD-87920-001	PSD	001	10 OF 14

RELEASE STATUS	P1	RELEASE DATE	2018/06/19 16:18:34

FORMAT: Met-lega-master-tb-prod-A3
REVISION: C
DATE: 2017/02/06

PART NUMBER IN PACKAGING OPTION			CKT SIZE	PEG	PLATE OPT.	DIMENSION					
TAPE & REEL WITH CAP	TUBE WITHOUT CAP	TUBE WITH CAP				A	B	C	M	F	G
87920-2001	87920-2011	87920-2021	20	N	1	25.40	22.86	---	5.84	9.65	10.66
87920-2002	87920-2012	87920-2022	20	N	2	25.40	22.86	---	5.84	9.65	10.66
87920-2003	87920-2013	87920-2023	20	N	3	25.40	22.86	---	5.84	9.65	10.66
87920-2004	87920-2014	87920-2024	20	Y	1	25.40	22.86	20.32	5.84	9.65	10.66
87920-2005	87920-2015	87920-2025	20	Y	2	25.40	22.86	20.32	5.84	9.65	10.66
87920-2006	87920-2016	87920-2026	20	Y	3	25.40	22.86	20.32	5.84	9.65	10.66
------	87920-2211	87920-2221	22	N	1	27.94	25.40	---	5.84	9.65	10.66
------	87920-2212	87920-2222	22	N	2	27.94	25.40	---	5.84	9.65	10.66
------	87920-2213	87920-2223	22	N	3	27.94	25.40	---	5.84	9.65	10.66
------	87920-2214	87920-2224	22	Y	1	27.94	25.40	22.86	5.84	9.65	10.66
------	87920-2215	87920-2225	22	Y	2	27.94	25.40	22.86	5.84	9.65	10.66
------	87920-2216	87920-2226	22	Y	3	27.94	25.40	22.86	5.84	9.65	10.66
------	87920-2411	87920-2421	24	N	1	30.48	27.94	---	5.84	9.65	10.66
------	87920-2412	87920-2422	24	N	2	30.48	27.94	---	5.84	9.65	10.66
------	87920-2413	87920-2423	24	N	3	30.48	27.94	---	5.84	9.65	10.66
------	87920-2414	87920-2424	24	Y	1	30.48	27.94	25.40	5.84	9.65	10.66
------	87920-2415	87920-2425	24	Y	2	30.48	27.94	25.40	5.84	9.65	10.66
------	87920-2416	87920-2426	24	Y	3	30.48	27.94	25.40	5.84	9.65	10.66

PART NUMBER IN PACKAGING OPTION			CKT SIZE	PEG	PLATE OPT.	DIMENSION					
TAPE & REEL WITH CAP	TUBE WITHOUT CAP	TUBE WITH CAP				A	B	C	M	F	G
87920-2031	87920-2041	87920-2051	20	N	1	25.40	22.86	---	3.05	6.86	10.31
87920-2032	87920-2042	87920-2052	20	N	2	25.40	22.86	---	3.05	6.86	10.31
87920-2033	87920-2043	87920-2053	20	N	3	25.40	22.86	---	3.05	6.86	10.31
87920-2034	87920-2044	87920-2054	20	Y	1	25.40	22.86	20.32	3.05	6.86	10.31
87920-2035	87920-2045	87920-2055	20	Y	2	25.40	22.86	20.32	3.05	6.86	10.31
87920-2036	87920-2046	87920-2056	20	Y	3	25.40	22.86	20.32	3.05	6.86	10.31
------	87920-2241	87920-2251	22	N	1	27.94	25.40	---	3.05	6.86	10.31
------	87920-2242	87920-2252	22	N	2	27.94	25.40	---	3.05	6.86	10.31
------	87920-2243	87920-2253	22	N	3	27.94	25.40	---	3.05	6.86	10.31
------	87920-2244	87920-2254	22	Y	1	27.94	25.40	22.86	3.05	6.86	10.31
------	87920-2245	87920-2255	22	Y	2	27.94	25.40	22.86	3.05	6.86	10.31
------	87920-2246	87920-2256	22	Y	3	27.94	25.40	22.86	3.05	6.86	10.31
------	87920-2441	87920-2451	24	N	1	30.48	27.94	---	3.05	6.86	10.31
------	87920-2442	87920-2452	24	N	2	30.48	27.94	---	3.05	6.86	10.31
------	87920-2443	87920-2453	24	N	3	30.48	27.94	---	3.05	6.86	10.31
------	87920-2444	87920-2454	24	Y	1	30.48	27.94	25.40	3.05	6.86	10.31
------	87920-2445	87920-2455	24	Y	2	30.48	27.94	25.40	3.05	6.86	10.31
------	87920-2446	87920-2456	24	Y	3	30.48	27.94	25.40	3.05	6.86	10.31

THIS DRAWING CONTAINS INFORMATION THAT IS PROPRIETARY TO MOLEX ELECTRONIC TECHNOLOGIES, LLC AND SHOULD NOT BE USED WITHOUT WRITTEN PERMISSION

MIGRATED TO NX
EC NO: 168769 2017/11/23
DRWN: GGUNAGI 2018/06/19
CHK'D: KHLIM 2018/06/19
APPR: KHLIM

REV: C2

GENERAL TOLERANCES (UNLESS SPECIFIED)

	MM	INCH
4 PLACES	±	±
3 PLACES	±	±
2 PLACES	± 0.2	±
1 PLACES	±	±
0 PLACES	±	±

ANGULAR TOL ± 3.0

DRAFT WHERE APPLICABLE MUST REMAIN WITHIN DIMENSIONS

DIMENSION UNITS: MM
SCALE: NTS
DRWN BY: SKLIM01 DATE: 2006/05/25
CHK'D BY: PATEY DATE: 2006/07/05
APPR BY: PATEY DATE: 2006/07/05
DRAWING SIZE: A3
THIRD ANGLE PROJECTION

molex®

CUSTOM HEADER
C-GRID HDR, SMT W/CAP WITH/WITHOUT LOC. PEGS

PRODUCT CUSTOMER DRAWING

SERIES	MATERIAL NUMBER	CUSTOMER
87920	SEE TABLE	GENERAL MARKET

DOCUMENT NUMBER	DOC TYPE	DOC PART	SHEET NUMBER
SD-87920-001	PSD	001	11 OF 14

RELEASE STATUS	P1	RELEASE DATE	2018/06/19 16:18:34

FORMAT: Met-lega-master-tb-prod-A3
REVISION: C
DATE: 2017/02/06

PART NUMBER IN PACKAGING OPTION			CKT SIZE	PEG	PLATE OPT.	DIMENSION					
TAPE & REEL WITH CAP	TUBE WITHOUT CAP	TUBE WITH CAP				A	B	C	M	F	G
------	87920-2611	87920-2621	26	N	1	33.02	30.48	---	5.84	9.65	10.66
------	87920-2612	87920-2622	26	N	2	33.02	30.48	---	5.84	9.65	10.66
------	87920-2613	87920-2623	26	N	3	33.02	30.48	---	5.84	9.65	10.66
------	87920-2614	87920-2624	26	Y	1	33.02	30.48	27.94	5.84	9.65	10.66
------	87920-2615	87920-2625	26	Y	2	33.02	30.48	27.94	5.84	9.65	10.66
------	87920-2616	87920-2626	26	Y	3	33.02	30.48	27.94	5.84	9.65	10.66
------	87920-2811	87920-2821	28	N	1	35.56	33.02	---	5.84	9.65	10.66
------	87920-2812	87920-2822	28	N	2	35.56	33.02	---	5.84	9.65	10.66
------	87920-2813	87920-2823	28	N	3	35.56	33.02	---	5.84	9.65	10.66
------	87920-2814	87920-2824	28	Y	1	35.56	33.02	30.48	5.84	9.65	10.66
------	87920-2815	87920-2825	28	Y	2	35.56	33.02	30.48	5.84	9.65	10.66
------	87920-2816	87920-2826	28	Y	3	35.56	33.02	30.48	5.84	9.65	10.66
------	87920-3011	87920-3021	30	N	1	38.10	35.56	---	5.84	9.65	10.66
------	87920-3012	87920-3022	30	N	2	38.10	35.56	---	5.84	9.65	10.66
------	87920-3013	87920-3023	30	N	3	38.10	35.56	---	5.84	9.65	10.66
------	87920-3014	87920-3024	30	Y	1	38.10	35.56	33.02	5.84	9.65	10.66
------	87920-3015	87920-3025	30	Y	2	38.10	35.56	33.02	5.84	9.65	10.66
------	87920-3016	87920-3026	30	Y	3	38.10	35.56	33.02	5.84	9.65	10.66

PART NUMBER IN PACKAGING OPTION			CKT SIZE	PEG	PLATE OPT.	DIMENSION					
TAPE & REEL WITH CAP	TUBE WITHOUT CAP	TUBE WITH CAP				A	B	C	M	F	G
------	87920-2641	87920-2651	26	N	1	33.02	30.48	---	3.05	6.86	10.31
------	87920-2642	87920-2652	26	N	2	33.02	30.48	---	3.05	6.86	10.31
------	87920-2643	87920-2653	26	N	3	33.02	30.48	---	3.05	6.86	10.31
------	87920-2644	87920-2654	26	Y	1	33.02	30.48	27.94	3.05	6.86	10.31
------	87920-2645	87920-2655	26	Y	2	33.02	30.48	27.94	3.05	6.86	10.31
------	87920-2646	87920-2656	26	Y	3	33.02	30.48	27.94	3.05	6.86	10.31
------	87920-2841	87920-2851	28	N	1	35.56	33.02	---	3.05	6.86	10.31
------	87920-2842	87920-2852	28	N	2	35.56	33.02	---	3.05	6.86	10.31
------	87920-2843	87920-2853	28	N	3	35.56	33.02	---	3.05	6.86	10.31
------	87920-2844	87920-2854	28	Y	1	35.56	33.02	30.48	3.05	6.86	10.31
------	87920-2845	87920-2855	28	Y	2	35.56	33.02	30.48	3.05	6.86	10.31
------	87920-2846	87920-2856	28	Y	3	35.56	33.02	30.48	3.05	6.86	10.31
------	87920-3041	87920-3051	30	N	1	38.10	35.56	---	3.05	6.86	10.31
------	87920-3042	87920-3052	30	N	2	38.10	35.56	---	3.05	6.86	10.31
------	87920-3043	87920-3053	30	N	3	38.10	35.56	---	3.05	6.86	10.31
------	87920-3044	87920-3054	30	Y	1	38.10	35.56	33.02	3.05	6.86	10.31
------	87920-3045	87920-3055	30	Y	2	38.10	35.56	33.02	3.05	6.86	10.31
------	87920-3046	87920-3056	30	Y	3	38.10	35.56	33.02	3.05	6.86	10.31

THIS DRAWING CONTAINS INFORMATION THAT IS PROPRIETARY TO MOLEX ELECTRONIC TECHNOLOGIES, LLC AND SHOULD NOT BE USED WITHOUT WRITTEN PERMISSION

MIGRATED TO NX
EC NO: 168769 2017/11/23
DRWN: GGUNAGI 2018/06/19
CHK'D: KHLIM 2018/06/19
APPR: KHLIM

REV: C2

GENERAL TOLERANCES (UNLESS SPECIFIED)

	MM	INCH
4 PLACES	±	±
3 PLACES	±	±
2 PLACES	± 0.2	±
1 PLACES	±	±
0 PLACES	±	±

ANGULAR TOL ± 3.0

DRAFT WHERE APPLICABLE MUST REMAIN WITHIN DIMENSIONS

DIMENSION UNITS: MM
SCALE: NTS
DRWN BY: SKLIM01 DATE: 2006/05/25
CHK'D BY: PATEY DATE: 2006/07/05
APPR BY: PATEY DATE: 2006/07/05
DRAWING SIZE: A3
THIRD ANGLE PROJECTION

molex®

CUSTOM HEADER
C-GRID HDR, SMT W/CAP WITH/WITHOUT LOC. PEGS

PRODUCT CUSTOMER DRAWING

SERIES	MATERIAL NUMBER	CUSTOMER
87920	SEE TABLE	GENERAL MARKET

DOCUMENT NUMBER	DOC TYPE	DOC PART	SHEET NUMBER
SD-87920-001	PSD	001	12 OF 14

RELEASE STATUS	P1	RELEASE DATE	2018/06/19 16:18:34

FORMAT: Met-lega-master-tb-prod-A3
REVISION: C
DATE: 2017/02/06

PART NUMBER IN PACKAGING OPTION			CKT SIZE	PEG	PLATE OPT.	DIMENSION					
TAPE & REEL WITH CAP	TUBE WITHOUT CAP	TUBE WITH CAP				A	B	C	M	F	G
------	87920-3211	87920-3221	32	N	1	40.64	38.10	---	5.84	9.65	10.66
------	87920-3212	87920-3222	32	N	2	40.64	38.10	---	5.84	9.65	10.66
------	87920-3213	87920-3223	32	N	3	40.64	38.10	---	5.84	9.65	10.66
------	87920-3214	87920-3224	32	Y	1	40.64	38.10	35.56	5.84	9.65	10.66
------	87920-3215	87920-3225	32	Y	2	40.64	38.10	35.56	5.84	9.65	10.66
------	87920-3216	87920-3226	32	Y	3	40.64	38.10	35.56	5.84	9.65	10.66
------	87920-3411	87920-3421	34	N	1	43.18	40.64	---	5.84	9.65	10.66
------	87920-3412	87920-3422	34	N	2	43.18	40.64	---	5.84	9.65	10.66
------	87920-3413	87920-3423	34	N	3	43.18	40.64	---	5.84	9.65	10.66
------	87920-3414	87920-3424	34	Y	1	43.18	40.64	38.10	5.84	9.65	10.66
------	87920-3415	87920-3425	34	Y	2	43.18	40.64	38.10	5.84	9.65	10.66
------	87920-3416	87920-3426	34	Y	3	43.18	40.64	38.10	5.84	9.65	10.66
------	87920-3611	87920-3621	36	N	1	45.72	43.18	---	5.84	9.65	10.66
------	87920-3612	87920-3622	36	N	2	45.72	43.18	---	5.84	9.65	10.66
------	87920-3613	87920-3623	36	N	3	45.72	43.18	---	5.84	9.65	10.66
------	87920-3614	87920-3624	36	Y	1	45.72	43.18	40.64	5.84	9.65	10.66
------	87920-3615	87920-3625	36	Y	2	45.72	43.18	40.64	5.84	9.65	10.66
------	87920-3616	87920-3626	36	Y	3	45.72	43.18	40.64	5.84	9.65	10.66

PART NUMBER IN PACKAGING OPTION			CKT SIZE	PEG	PLATE OPT.	DIMENSION					
TAPE & REEL WITH CAP	TUBE WITHOUT CAP	TUBE WITH CAP				A	B	C	M	F	G
------	87920-3241	87920-3251	32	N	1	40.64	38.10	---	3.05	6.86	10.31
------	87920-3242	87920-3252	32	N	2	40.64	38.10	---	3.05	6.86	10.31
------	87920-3243	87920-3253	32	N	3	40.64	38.10	---	3.05	6.86	10.31
------	87920-3244	87920-3254	32	Y	1	40.64	38.10	35.56	3.05	6.86	10.31
------	87920-3245	87920-3255	32	Y	2	40.64	38.10	35.56	3.05	6.86	10.31
------	87920-3246	87920-3256	32	Y	3	40.64	38.10	35.56	3.05	6.86	10.31
------	87920-3441	87920-3451	34	N	1	43.18	40.64	---	3.05	6.86	10.31
------	87920-3442	87920-3452	34	N	2	43.18	40.64	---	3.05	6.86	10.31
------	87920-3443	87920-3453	34	N	3	43.18	40.64	---	3.05	6.86	10.31
------	87920-3444	87920-3454	34	Y	1	43.18	40.64	38.10	3.05	6.86	10.31
------	87920-3445	87920-3455	34	Y	2	43.18	40.64	38.10	3.05	6.86	10.31
------	87920-3446	87920-3456	34	Y	3	43.18	40.64	38.10	3.05	6.86	10.31
------	87920-3641	87920-3651	36	N	1	45.72	43.18	---	3.05	6.86	10.31
------	87920-3642	87920-3652	36	N	2	45.72	43.18	---	3.05	6.86	10.31
------	87920-3643	87920-3653	36	N	3	45.72	43.18	---	3.05	6.86	10.31
------	87920-3644	87920-3654	36	Y	1	45.72	43.18	40.64	3.05	6.86	10.31
------	87920-3645	87920-3655	36	Y	2	45.72	43.18	40.64	3.05	6.86	10.31
------	87920-3646	87920-3656	36	Y	3	45.72	43.18	40.64	3.05	6.86	10.31

THIS DRAWING CONTAINS INFORMATION THAT IS PROPRIETARY TO MOLEX ELECTRONIC TECHNOLOGIES, LLC AND SHOULD NOT BE USED WITHOUT WRITTEN PERMISSION

MIGRATED TO NX
EC NO: 168769 2017/11/23
DRWN: GGUNAGI 2018/06/19
CHK'D: KHLIM 2018/06/19
APPR: KHLIM

REV: C2

GENERAL TOLERANCES (UNLESS SPECIFIED)

	MM	INCH
4 PLACES	±	±
3 PLACES	±	±
2 PLACES	± 0.2	±
1 PLACES	±	±
0 PLACES	±	±

ANGULAR TOL ± 3.0

DRAFT WHERE APPLICABLE MUST REMAIN WITHIN DIMENSIONS

DIMENSION UNITS: MM
SCALE: NTS
DRWN BY: SKLIM01 DATE: 2006/05/25
CHK'D BY: PATEY DATE: 2006/07/05
APPR BY: PATEY DATE: 2006/07/05
DRAWING SIZE: A3
THIRD ANGLE PROJECTION

molex®

CUSTOM HEADER
C-GRID HDR, SMT W/CAP WITH/WITHOUT LOC. PEGS

PRODUCT CUSTOMER DRAWING

SERIES	MATERIAL NUMBER	CUSTOMER
87920	SEE TABLE	GENERAL MARKET

DOCUMENT NUMBER	DOC TYPE	DOC PART	SHEET NUMBER
SD-87920-001	PSD	001	13 OF 14

RELEASE STATUS	P1	RELEASE DATE	2018/06/19 16:18:34

FORMAT: Met-lega-master-tb-prod-A3
REVISION: C
DATE: 2017/02/06

PART NUMBER IN PACKAGING OPTION			CKT SIZE	PEG	PLATE OPT.	DIMENSION					
TAPE & REEL WITH CAP	TUBE WITHOUT CAP	TUBE WITH CAP				A	B	C	M	F	G
------	87920-3811	87920-3821	38	N	1	48.26	45.72	---	5.84	9.65	10.66
------	87920-3812	87920-3822	38	N	2	48.26	45.72	---	5.84	9.65	10.66
------	87920-3813	87920-3823	38	N	3	48.26	45.72	---	5.84	9.65	10.66
------	87920-3814	87920-3824	38	Y	1	48.26	45.72	43.18	5.84	9.65	10.66
------	87920-3815	87920-3825	38	Y	2	48.26	45.72	43.18	5.84	9.65	10.66
------	87920-3816	87920-3826	38	Y	3	48.26	45.72	43.18	5.84	9.65	10.66
87920-4001	87920-4011	87920-4021	40	N	1	50.80	48.26	---	5.84	9.65	10.66
87920-4002	87920-4012	87920-4022	40	N	2	50.80	48.26	---	5.84	9.65	10.66
87920-4003	87920-4013	87920-4023	40	N	3	50.80	48.26	---	5.84	9.65	10.66
87920-4004	87920-4014	87920-4024	40	Y	1	50.80	48.26	45.72	5.84	9.65	10.66
87920-4005	87920-4015	87920-4025	40	Y	2	50.80	48.26	45.72	5.84	9.65	10.66
87920-4006	87920-4016	87920-4026	40	Y	3	50.80	48.26	45.72	5.84	9.65	10.66

PART NUMBER IN PACKAGING OPTION			CKT SIZE	PEG	PLATE OPT.	DIMENSION					
TAPE & REEL WITH CAP	TUBE WITHOUT CAP	TUBE WITH CAP				A	B	C	M	F	G
------	87920-3841	87920-3851	38	N	1	48.26	45.72	---	3.05	6.86	10.31
------	87920-3842	87920-3852	38	N	2	48.26	45.72	---	3.05	6.86	10.31
------	87920-3843	87920-3853	38	N	3	48.26	45.72	---	3.05	6.86	10.31
------	87920-3844	87920-3854	38	Y	1	48.26	45.72	43.18	3.05	6.86	10.31
------	87920-3845	87920-3855	38	Y	2	48.26	45.72	43.18	3.05	6.86	10.31
------	87920-3846	87920-3856	38	Y	3	48.26	45.72	43.18	3.05	6.86	10.31
87920-4031	87920-4041	87920-4051	40	N	1	50.80	48.26	---	3.05	6.86	10.31
87920-4032	87920-4042	87920-4052	40	N	2	50.80	48.26	---	3.05	6.86	10.31
87920-4033	87920-4043	87920-4053	40	N	3	50.80	48.26	---	3.05	6.86	10.31
87920-4034	87920-4044	87920-4054	40	Y	1	50.80	48.26	45.72	3.05	6.86	10.31
87920-4035	87920-4045	87920-4055	40	Y	2	50.80	48.26	45.72	3.05	6.86	10.31
87920-4036	87920-4046	87920-4056	40	Y	3	50.80	48.26	45.72	3.05	6.86	10.31

THIS DRAWING CONTAINS INFORMATION THAT IS PROPRIETARY TO MOLEX ELECTRONIC TECHNOLOGIES, LLC AND SHOULD NOT BE USED WITHOUT WRITTEN PERMISSION

MIGRATED TO NX

EC NO: 168769 2017/11/23
DRWN: GGUNAGI 2018/06/19
CHK'D: KHLIM 2018/06/19
APPR: KHLIM

REV C2

GENERAL TOLERANCES (UNLESS SPECIFIED)

	MM	INCH
4 PLACES	±	±
3 PLACES	±	±
2 PLACES	± 0.2	±
1 PLACES	±	±
0 PLACES	±	±

ANGULAR TOL ± 3.0

DRAFT WHERE APPLICABLE MUST REMAIN WITHIN DIMENSIONS

DIMENSION UNITS: MM
SCALE: NTS
DRWN BY: SKLIM01 DATE: 2006/05/25
CHK'D BY: PATEY DATE: 2006/07/05
APPR BY: PATEY DATE: 2006/07/05
DRAWING SIZE: A3
THIRD ANGLE PROJECTION

molex®

CUSTOM HEADER
C-GRID HDR, SMT W/CAP WITH/WITHOUT LOC. PEGS

PRODUCT CUSTOMER DRAWING

SERIES: 87920
MATERIAL NUMBER: SEE TABLE
CUSTOMER: GENERAL MARKET
DOCUMENT NUMBER: SD-87920-001
DOC TYPE: PSD
DOC PART: 001
SHEET NUMBER: 14 OF 14

RELEASE STATUS: P1 RELEASE DATE: 2018/06/19 16:18:34

FORMAT: Met-lega-master-tb-prod-A3
REVISION: C
DATE: 2017/02/06

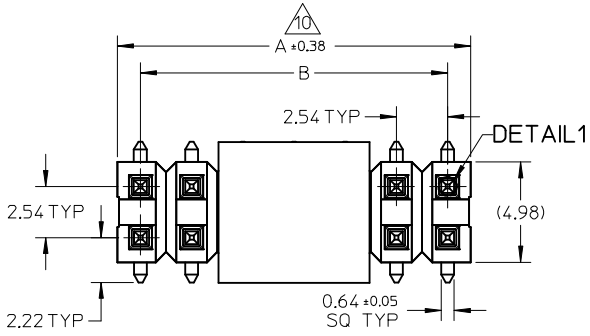

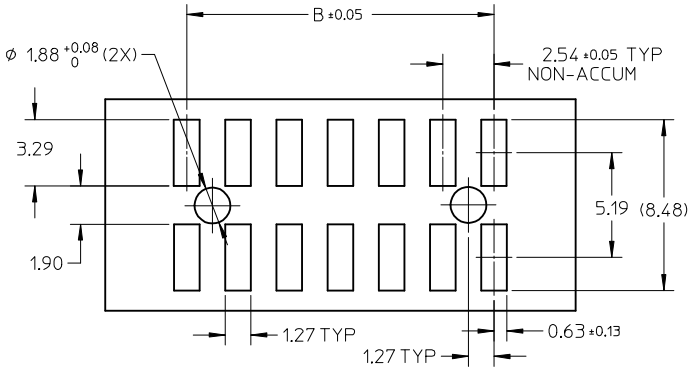

RECOMMENDED PCB LAYOUT

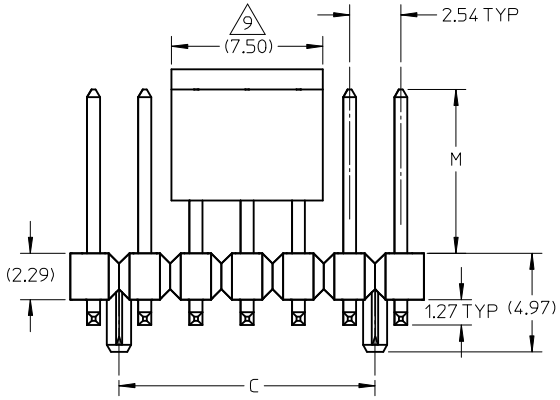

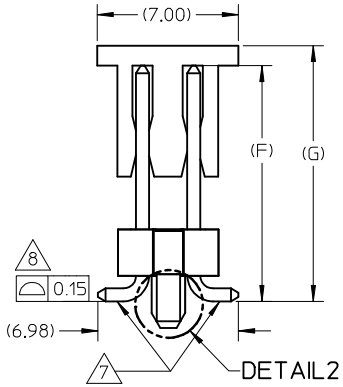

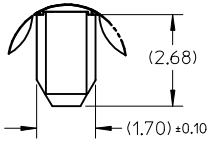

DETAIL2

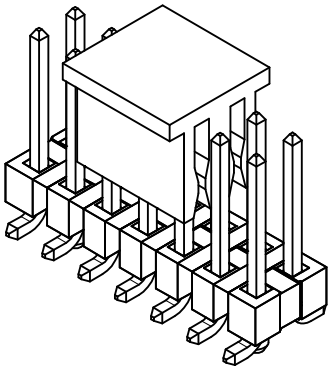

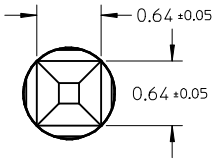

DETAIL1

NOTES:

1. MATERIAL:
   HSG: LCP, GLASS-FILLED, UL94V-0,COLOR: BLACK
   CAP: NYLON, GLASS-FILLED, UL94V-0, COLOR: BLACK
   PIN: 0.64MM SQ, COPPER ALLOY
2. PLATING TYPE:
   (1) 0.05μm MIN. GOLD PLATE ON CONTACT AND
   2.50μm MIN. TIN ON SOLDERTAIL OVER
   1.25μm MIN. NICKEL OVERALL.
   (2) 0.38μm MIN. GOLD PLATE ON CONTACT AND
   2.00μm MIN. TIN ON SOLDERTAIL OVER
   1.25μm MIN. NICKEL OVERALL.
   (3) 0.75μm MIN. GOLD PLATE ON CONTACT AND
   2.00μm MIN. TIN ON SOLDERTAIL OVER
   1.25μm MIN. NICKEL OVERALL.
   (4) 2.50μm MIN. TIN OVERALL
   1.25μm MIN. NICKEL OVERALL
3. PACKAGING TYPE: SEE TABLE
4. PCB THICKNESS 1.60+/-0.10mm
5. PRODUCT SPECIFICATION: PS-87920-019
6. WAFER TO BE FLAT WITHIN 0.003 mm/mm
7. BEND DEPRESSION IS ACCEPTED SO LONG AS IT DOES NOT AFFECT THE OVERALL COPLANARITY OF TAIL
8. COPLANARITY IS TO BE MEASURED BY RESTING THE SOLDER TAIL ON A FLAT SURFACE
9. CAP LOCATION IS CENTERED ALONG THE MATING ENDS AS SHOWN. TOP SURFACE OF CAP TO BE FLAT FOR THE PURPOSE OF PICK & PLACE BY VACUUM SUCTION NOZZLE
10. IRREGULAR CIRCUIT CUTOFF WITHIN BREAKAWAY SECTION IS PERMISSIBLE. CUTTING OR CHIPPING OF THE MAIN BODY IS NOT ACCEPTABLE
11. PARTS ARE NOT STACKABLE ON 2.54 CENTER
12. THE ABOVE CKT 14 IS FOR ILLUSTRATION PURPOSE ONLY
13. TUBE LENGTH IS 560MM PER STANDARD
14. PACKAGING SPECIFICATION:
    TRAY: PK-89990-489
    TUBE: PK-89990-507
    TAPE & REEL: PK-89990-479

SEE SHT 2	EC NO: S2015-0282	DRWN:ATSEE 2014/09/23	CHKD:FANNYWONG 2014/09/23
APPR:LBLEE 2014/10/09	DESCRIPTION	REV	
A3			

QUALITY SYMBOLS: F_A=0, F_C=0, F_P=0

GENERAL TOLERANCES (UNLESS SPECIFIED)

	mm	INCH
4 PLACES	± ---	± ---
3 PLACES	± ---	± ---
2 PLACES	± 0.2	± ---
1 PLACE	± ---	± ---
ANGULAR ± 3 °		

DRAFT WHERE APPLICABLE MUST REMAIN WITHIN DIMENSIONS

DIMENSION STYLE: MM ONLY	SCALE: NTS	DESIGN UNITS: METRIC	THIRD ANGLE PROJECTION
DRAWN BY: SKLIM01	DATE: 2006/10/09	TITLE: CUSTOM HEADER 2.54MM PITCH DUAL ROW HEADER, SINGLE WAFER SMT	
CHECKED BY: CWLAM	DATE: 2007/02/09		
APPROVED BY: MLONG	DATE: 2010/03/19	molex MOLEX INCORPORATED	
MATERIAL NO.: SEE TABLE		DOCUMENT NO.: SD-87920-050	SHEET NO.: 1 OF 10
SIZE: A3	THIS DRAWING CONTAINS INFORMATION THAT IS PROPRIETARY TO MOLEX INCORPORATED AND SHOULD NOT BE USED WITHOUT WRITTEN PERMISSION		

CIRCUITS POSITION
CONFIGURATION

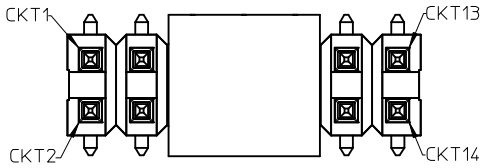

PART WITHOUT
PEG & CAP VERSION

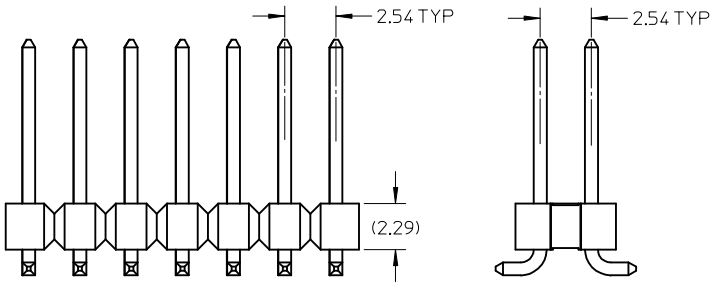

CAP POSITION FOR 87920-0807

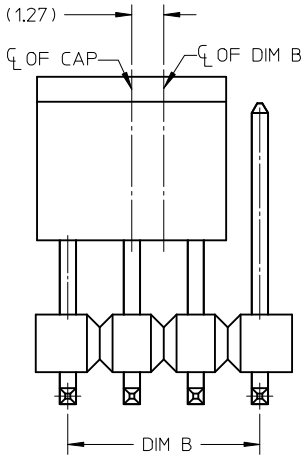

PART WITHOUT CAP WITH PEGS
PACK IN TUBE ORIENTATION
(FOR REFERENCE USED ONLY)

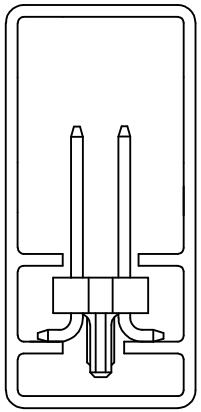

ADD CAP RELOCATION FOR 87920-0807 EC NO: S2015-0282	DRWN:ATSEE 2014/09/23	CH'KD:FANNYWONG 2014/09/23	APPR:LBLEE 2014/10/09	REV	DESCRIPTION	QUALITY SYMBOLS	
A3						F_A=0 F_C=0 F_P=0	

GENERAL TOLERANCES (UNLESS SPECIFIED)

	mm	INCH
4 PLACES	± ---	± ---
3 PLACES	± ---	± ---
2 PLACES	± 0.2	± ---
1 PLACE	± ---	± ---

ANGULAR ± 3 °

DRAFT WHERE APPLICABLE MUST REMAIN WITHIN DIMENSIONS

DIMENSION STYLE: MM ONLY	SCALE: NTS	DESIGN UNITS: METRIC	THIRD ANGLE PROJECTION
DRAWN BY: SKLIM01	DATE: 2006/10/09	TITLE: CUSTOM HEADER 2.54MM PITCH DUAL ROW HEADER, SINGLE WAFER SMT	
CHECKED BY: CWLAM	DATE: 2007/02/09		
APPROVED BY: MLONG	DATE: 2010/03/19	molex MOLEX INCORPORATED	
MATERIAL NO.: SEE TABLE		DOCUMENT NO.: SD-87920-050	SHEET NO.: 2 OF 10
SIZE: A3	THIS DRAWING CONTAINS INFORMATION THAT IS PROPRIETARY TO MOLEX INCORPORATED AND SHOULD NOT BE USED WITHOUT WRITTEN PERMISSION		

PART NUMBER IN PACKAGING OPTION			CKT SIZE	PEG	PLATE OPT.	DIMENSION					
WITH CAP IN TAPE & REEL	W/O CAP IN TRAY	WITH CAP IN TRAY				A	B	C	G	F	M
87920-0427	87920-0461	87920-0465	04	N	1	5.08	2.54	-	12.69	11.69	8.13
87920-0428	87920-0462	87920-0466	04	N	2	5.08	2.54	-	12.69	11.69	8.13
87920-0429	87920-0463	87920-0467	04	N	3	5.08	2.54	-	12.69	11.69	8.13
87920-0430	87920-0464	87920-0468	04	N	4	5.08	2.54	-	12.69	11.69	8.13
87920-0627	87920-0661	87920-0665	06	N	1	7.62	5.08	-	12.69	11.69	8.13
87920-0628	87920-0662	87920-0666	06	N	2	7.62	5.08	-	12.69	11.69	8.13
87920-0629	87920-0663	87920-0667	06	N	3	7.62	5.08	-	12.69	11.69	8.13
87920-0630	87920-0664	87920-0668	06	N	4	7.62	5.08	-	12.69	11.69	8.13

PART NUMBER IN PACKAGING OPTION			CKT SIZE	PEG	PLATE OPT.	DIMENSION					
W/O CAP IN TRAY	-	WITH CAP IN TRAY				A	B	C	G	F	M
87920-0447	-	87920-0485	04	N	1	5.08	2.54	-	15.23	14.23	10.67
87920-0448	-	87920-0486	04	N	2	5.08	2.54	-	15.23	14.23	10.67
87920-0449	-	87920-0487	04	N	3	5.08	2.54	-	15.23	14.23	10.67
87920-0450	-	87920-0488	04	N	4	5.08	2.54	-	15.23	14.23	10.67
87920-0647	-	87920-0685	06	N	1	7.62	5.08	-	15.23	14.23	10.67
87920-0648	-	87920-0686	06	N	2	7.62	5.08	-	15.23	14.23	10.67
87920-0649	-	87920-0687	06	N	3	7.62	5.08	-	15.23	14.23	10.67
87920-0650	-	87920-0688	06	N	4	7.62	5.08	-	15.23	14.23	10.67

PART NUMBER IN PACKAGING OPTION			CKT SIZE	PEG	PLATE OPT.	DIMENSION					
WITH CAP IN TAPE & REEL	W/O CAP IN TUBE	WITH CAP IN TUBE				A	B	C	G	F	M
87920-0827	87920-0861	87920-0865	08	N	1	10.16	7.62	-	12.69	11.69	8.13
87920-0828	87920-0862	87920-0866	08	N	2	10.16	7.62	-	12.69	11.69	8.13
87920-0829	87920-0863	87920-0867	08	N	3	10.16	7.62	-	12.69	11.69	8.13
87920-0830	87920-0864	87920-0868	08	N	4	10.16	7.62	-	12.69	11.69	8.13
87920-0837	87920-0871	87920-0875	08	Y	1	10.16	7.62	5.08	12.69	11.69	8.13
87920-0838	87920-0872	87920-0876	08	Y	2	10.16	7.62	5.08	12.69	11.69	8.13
87920-0839	87920-0873	87920-0877	08	Y	3	10.16	7.62	5.08	12.69	11.69	8.13
87920-0840	87920-0874	87920-0878	08	Y	4	10.16	7.62	5.08	12.69	11.69	8.13
87920-0807	87920-0884	87920-0888	08	N	4	10.16	7.62	-	15.23	14.23	10.67
87920-0808	87920-0894	87920-0898	08	Y	4	10.16	7.62	5.08	15.23	14.23	10.67

PART NUMBER IN PACKAGING OPTION			CKT SIZE	PEG	PLATE OPT.	DIMENSION					
W/O CAP IN TRAY	W/O CAP IN TUBE	WITH CAP IN TUBE				A	B	C	G	F	M
87920-0847	87920-0881	87920-0885	08	N	1	10.16	7.62	-	15.23	14.23	10.67
87920-0848	87920-0882	87920-0886	08	N	2	10.16	7.62	-	15.23	14.23	10.67
87920-0849	87920-0883	87920-0887	08	N	3	10.16	7.62	-	15.23	14.23	10.67
87920-0850	87920-0884	87920-0888	08	N	4	10.16	7.62	-	15.23	14.23	10.67
87920-0857	87920-0891	87920-0895	08	Y	1	10.16	7.62	5.08	15.23	14.23	10.67
87920-0858	87920-0892	87920-0896	08	Y	2	10.16	7.62	5.08	15.23	14.23	10.67
87920-0859	87920-0893	87920-0897	08	Y	3	10.16	7.62	5.08	15.23	14.23	10.67
87920-0860	87920-0894	87920-0898	08	Y	4	10.16	7.62	5.08	15.23	14.23	10.67

87920-0807 : REFER TO SHEET 2 FOR CAP LOCATION

SEE SHT 2
EC NO: S2015-0282
DRWN:ATSEE 2014/09/23
CH'KD:FANNYWONG 2014/09/23
APPR:LBLEE 2014/10/09
A3
REV DESCRIPTION

QUALITY SYMBOLS
FA=0
FC=0
FP=0

GENERAL TOLERANCES (UNLESS SPECIFIED)

	mm	INCH
4 PLACES	± ---	± ---
3 PLACES	± ---	± ---
2 PLACES	± 0.2	± ---
1 PLACE	± ---	± ---
ANGULAR ± 3 °		

DRAFT WHERE APPLICABLE MUST REMAIN WITHIN DIMENSIONS

DIMENSION STYLE: MM ONLY
SCALE: NTS
DESIGN UNITS: METRIC
THIRD ANGLE PROJECTION

DRAWN BY: SKLIM01 DATE: 2006/10/09
CHECKED BY: CWLAM DATE: 2007/02/09
APPROVED BY: MLONG DATE: 2010/03/19
MATERIAL NO.: SEE TABLE
SIZE: A3

TITLE: CUSTOM HEADER 2.54MM PITCH DUAL ROW HEADER, SINGLE WAFER SMT

molex MOLEX INCORPORATED

DOCUMENT NO.: SD-87920-050
SHEET NO.: 3 OF 10

THIS DRAWING CONTAINS INFORMATION THAT IS PROPRIETARY TO MOLEX INCORPORATED AND SHOULD NOT BE USED WITHOUT WRITTEN PERMISSION

PART NUMBER IN PACKAGING OPTION			CKT SIZE	PEG	PLATE OPT.	DIMENSION					
WITH CAP IN TAPE & REEL	W/O CAP IN TUBE	WITH CAP IN TUBE				A	B	C	G	F	M
87920-1027	87920-1061	87920-1065	10	N	1	12.70	10.16	-	12.69	11.69	8.13
87920-1028	87920-1062	87920-1066	10	N	2	12.70	10.16	-	12.69	11.69	8.13
87920-1029	87920-1063	87920-1067	10	N	3	12.70	10.16	-	12.69	11.69	8.13
87920-1030	87920-1064	87920-1068	10	N	4	12.70	10.16	-	12.69	11.69	8.13
87920-1037	87920-1071	87920-1075	10	Y	1	12.70	10.16	7.62	12.69	11.69	8.13
87920-1038	87920-1072	87920-1076	10	Y	2	12.70	10.16	7.62	12.69	11.69	8.13
87920-1039	87920-1073	87920-1077	10	Y	3	12.70	10.16	7.62	12.69	11.69	8.13
87920-1040	87920-1074	87920-1078	10	Y	4	12.70	10.16	7.62	12.69	11.69	8.13
87920-1227	87920-1261	87920-1265	12	N	1	15.24	12.70	-	12.69	11.69	8.13
87920-1228	87920-1262	87920-1266	12	N	2	15.24	12.70	-	12.69	11.69	8.13
87920-1229	87920-1263	87920-1267	12	N	3	15.24	12.70	-	12.69	11.69	8.13
87920-1230	87920-1264	87920-1268	12	N	4	15.24	12.70	-	12.69	11.69	8.13
87920-1237	87920-1271	87920-1275	12	Y	1	15.24	12.70	10.16	12.69	11.69	8.13
87920-1238	87920-1272	87920-1276	12	Y	2	15.24	12.70	10.16	12.69	11.69	8.13
87920-1239	87920-1273	87920-1277	12	Y	3	15.24	12.70	10.16	12.69	11.69	8.13
87920-1240	87920-1274	87920-1278	12	Y	4	15.24	12.70	10.16	12.69	11.69	8.13
87920-1427	87920-1461	87920-1465	14	N	1	17.78	15.24	-	12.69	11.69	8.13
87920-1428	87920-1462	87920-1466	14	N	2	17.78	15.24	-	12.69	11.69	8.13
87920-1429	87920-1463	87920-1467	14	N	3	17.78	15.24	-	12.69	11.69	8.13
87920-1430	87920-1464	87920-1468	14	N	4	17.78	15.24	-	12.69	11.69	8.13
87920-1437	87920-1471	87920-1475	14	Y	1	17.78	15.24	12.70	12.69	11.69	8.13
87920-1438	87920-1472	87920-1476	14	Y	2	17.78	15.24	12.70	12.69	11.69	8.13
87920-1439	87920-1473	87920-1477	14	Y	3	17.78	15.24	12.70	12.69	11.69	8.13
87920-1440	87920-1474	87920-1478	14	Y	4	17.78	15.24	12.70	12.69	11.69	8.13

PART NUMBER IN PACKAGING OPTION			CKT SIZE	PEG	PLATE OPT.	DIMENSION					
W/O CAP IN TRAY	W/O CAP IN TUBE	WITH CAP IN TUBE				A	B	C	G	F	M
87920-1047	87920-1081	87920-1085	10	N	1	12.70	10.16	-	15.23	14.23	10.67
87920-1048	87920-1082	87920-1086	10	N	2	12.70	10.16	-	15.23	14.23	10.67
87920-1049	87920-1083	87920-1087	10	N	3	12.70	10.16	-	15.23	14.23	10.67
87920-1050	87920-1084	87920-1088	10	N	4	12.70	10.16	-	15.23	14.23	10.67
87920-1057	87920-1091	87920-1095	10	Y	1	12.70	10.16	7.62	15.23	14.23	10.67
87920-1058	87920-1092	87920-1096	10	Y	2	12.70	10.16	7.62	15.23	14.23	10.67
87920-1059	87920-1093	87920-1097	10	Y	3	12.70	10.16	7.62	15.23	14.23	10.67
87920-1060	87920-1094	87920-1098	10	Y	4	12.70	10.16	7.62	15.23	14.23	10.67
87920-1247	87920-1281	87920-1285	12	N	1	15.24	12.70	-	15.23	14.23	10.67
87920-1248	87920-1282	87920-1286	12	N	2	15.24	12.70	-	15.23	14.23	10.67
87920-1249	87920-1283	87920-1287	12	N	3	15.24	12.70	-	15.23	14.23	10.67
87920-1250	87920-1284	87920-1288	12	N	4	15.24	12.70	-	15.23	14.23	10.67
87920-1257	87920-1291	87920-1295	12	Y	1	15.24	12.70	10.16	15.23	14.23	10.67
87920-1258	87920-1292	87920-1296	12	Y	2	15.24	12.70	10.16	15.23	14.23	10.67
87920-1259	87920-1293	87920-1297	12	Y	3	15.24	12.70	10.16	15.23	14.23	10.67
87920-1260	87920-1294	87920-1298	12	Y	4	15.24	12.70	10.16	15.23	14.23	10.67
87920-1447	87920-1481	87920-1485	14	N	1	17.78	15.24	-	15.23	14.23	10.67
87920-1448	87920-1482	87920-1486	14	N	2	17.78	15.24	-	15.23	14.23	10.67
87920-1449	87920-1483	87920-1487	14	N	3	17.78	15.24	-	15.23	14.23	10.67
87920-1450	87920-1484	87920-1488	14	N	4	17.78	15.24	-	15.23	14.23	10.67
87920-1457	87920-1491	87920-1495	14	Y	1	17.78	15.24	12.70	15.23	14.23	10.67
87920-1458	87920-1492	87920-1496	14	Y	2	17.78	15.24	12.70	15.23	14.23	10.67
87920-1459	87920-1493	87920-1497	14	Y	3	17.78	15.24	12.70	15.23	14.23	10.67
87920-1460	87920-1494	87920-1498	14	Y	4	17.78	15.24	12.70	15.23	14.23	10.67

SEE SHT 2
EC NO: S2015-0282
DRWN:ATSEE 2014/09/23
CH'KD:FANNYWONG 2014/09/23
APPR:LBLEE 2014/10/09
A3

REV | DESCRIPTION

QUALITY SYMBOLS
FA=0
FC=0
FP=0

GENERAL TOLERANCES (UNLESS SPECIFIED)

	mm	INCH
4 PLACES	± ---	± ---
3 PLACES	± ---	± ---
2 PLACES	± 0.2	± ---
1 PLACE	± ---	± ---
ANGULAR ± 3 °		

DRAFT WHERE APPLICABLE MUST REMAIN WITHIN DIMENSIONS

DIMENSION STYLE: MM ONLY
SCALE: NTS
DESIGN UNITS: METRIC
THIRD ANGLE PROJECTION

DRAWN BY: SKLIM01 DATE: 2006/10/09
CHECKED BY: CWLAM DATE: 2007/02/09
APPROVED BY: MLONG DATE: 2010/03/19

TITLE: CUSTOM HEADER 2.54MM PITCH DUAL ROW HEADER, SINGLE WAFER SMT

molex MOLEX INCORPORATED

MATERIAL NO.: SEE TABLE
DOCUMENT NO.: SD-87920-050
SHEET NO.: 4 OF 10
SIZE: A3

THIS DRAWING CONTAINS INFORMATION THAT IS PROPRIETARY TO MOLEX INCORPORATED AND SHOULD NOT BE USED WITHOUT WRITTEN PERMISSION

PART NUMBER IN PACKAGING OPTION			CKT SIZE	PEG	PLATE OPT.	DIMENSION					
WITH CAP IN TAPE & REEL	W/O CAP IN TUBE	WITH CAP IN TUBE				A	B	C	G	F	M
87920-1627	87920-1661	87920-1665	16	N	1	20.32	17.78	-	12.69	11.69	8.13
87920-1628	87920-1662	87920-1666	16	N	2	20.32	17.78	-	12.69	11.69	8.13
87920-16629	87920-1663	87920-1667	16	N	3	20.32	17.78	-	12.69	11.69	8.13
87920-1630	87920-1664	87920-1668	16	N	4	20.32	17.78	-	12.69	11.69	8.13
87920-1637	87920-1671	87920-1675	16	Y	1	20.32	17.78	15.24	12.69	11.69	8.13
87920-1638	87920-1672	87920-1676	16	Y	2	20.32	17.78	15.24	12.69	11.69	8.13
87920-1639	87920-1673	87920-1677	16	Y	3	20.32	17.78	15.24	12.69	11.69	8.13
87920-1640	87920-1674	87920-1678	16	Y	4	20.32	17.78	15.24	12.69	11.69	8.13
87920-1827	87920-1861	87920-1865	18	N	1	22.86	20.32	-	12.69	11.69	8.13
87920-1828	87920-1862	87920-1866	18	N	2	22.86	20.32	-	12.69	11.69	8.13
87920-1829	87920-1863	87920-1867	18	N	3	22.86	20.32	-	12.69	11.69	8.13
87920-1830	87920-1864	87920-1868	18	N	4	22.86	20.32	-	12.69	11.69	8.13
87920-1837	87920-1871	87920-1875	18	Y	1	22.86	20.32	17.78	12.69	11.69	8.13
87920-1838	87920-1872	87920-1876	18	Y	2	22.86	20.32	17.78	12.69	11.69	8.13
87920-1839	87920-1873	87920-1877	18	Y	3	22.86	20.32	17.78	12.69	11.69	8.13
87920-1840	87920-1874	87920-1878	18	Y	4	22.86	20.32	17.78	12.69	11.69	8.13
87920-2027	87920-2061	87920-2065	20	N	1	25.40	22.86	-	12.69	11.69	8.13
87920-2028	87920-2062	87920-2066	20	N	2	25.40	22.86	-	12.69	11.69	8.13
87920-2029	87920-2063	87920-2067	20	N	3	25.40	22.86	-	12.69	11.69	8.13
87920-2030	87920-2064	87920-2068	20	N	4	25.40	22.86	-	12.69	11.69	8.13
87920-2037	87920-2071	87920-2075	20	Y	1	25.40	22.86	20.32	12.69	11.69	8.13
87920-2038	87920-2072	87920-2076	20	Y	2	25.40	22.86	20.32	12.69	11.69	8.13
87920-2039	87920-2073	87920-2077	20	Y	3	25.40	22.86	20.32	12.69	11.69	8.13
87920-2040	87920-2074	87920-2078	20	Y	4	25.40	22.86	20.32	12.69	11.69	8.13

PART NUMBER IN PACKAGING OPTION			CKT SIZE	PEG	PLATE OPT.	DIMENSION					
W/O CAP IN TRAY	W/O CAP IN TUBE	WITH CAP IN TUBE				A	B	C	G	F	M
87920-1647	87920-1681	87920-1685	16	N	1	20.32	17.78	-	15.23	14.23	10.67
87920-1648	87920-1682	87920-1686	16	N	2	20.32	17.78	-	15.23	14.23	10.67
87920-1649	87920-1683	87920-1687	16	N	3	20.32	17.78	-	15.23	14.23	10.67
87920-1650	87920-1684	87920-1688	16	N	4	20.32	17.78	-	15.23	14.23	10.67
87920-1657	87920-1691	87920-1695	16	Y	1	20.32	17.78	15.24	15.23	14.23	10.67
87920-1658	87920-1692	87920-1696	16	Y	2	20.32	17.78	15.24	15.23	14.23	10.67
87920-1659	87920-1693	87920-1697	16	Y	3	20.32	17.78	15.24	15.23	14.23	10.67
87920-1660	87920-1694	87920-1698	16	Y	4	20.32	17.78	15.24	15.23	14.23	10.67
87920-1847	87920-1881	87920-1885	18	N	1	22.86	20.32	-	15.23	14.23	10.67
87920-1848	87920-1882	87920-1886	18	N	2	22.86	20.32	-	15.23	14.23	10.67
87920-1849	87920-1883	87920-1887	18	N	3	22.86	20.32	-	15.23	14.23	10.67
87920-1850	87920-1884	87920-1888	18	N	4	22.86	20.32	-	15.23	14.23	10.67
87920-1857	87920-1891	87920-1895	18	Y	1	22.86	20.32	17.78	15.23	14.23	10.67
87920-1858	87920-1892	87920-1896	18	Y	2	22.86	20.32	17.78	15.23	14.23	10.67
87920-1859	87920-1893	87920-1897	18	Y	3	22.86	20.32	17.78	15.23	14.23	10.67
87920-1860	87920-1894	87920-1898	18	Y	4	22.86	20.32	17.78	15.23	14.23	10.67
87920-2047	87920-2081	87920-2085	20	N	1	25.40	22.86	-	15.23	14.23	10.67
87920-2048	87920-2082	87920-2086	20	N	2	25.40	22.86	-	15.23	14.23	10.67
87920-2049	87920-2083	87920-2087	20	N	3	25.40	22.86	-	15.23	14.23	10.67
87920-2050	87920-2084	87920-2088	20	N	4	25.40	22.86	-	15.23	14.23	10.67
87920-2057	87920-2091	87920-2095	20	Y	1	25.40	22.86	20.32	15.23	14.23	10.67
87920-2058	87920-2092	87920-2096	20	Y	2	25.40	22.86	20.32	15.23	14.23	10.67
87920-2059	87920-2093	87920-2097	20	Y	3	25.40	22.86	20.32	15.23	14.23	10.67
87920-2060	87920-2094	87920-2098	20	Y	4	25.40	22.86	20.32	15.23	14.23	10.67

SEE SHT 2
EC NO: S2015-0282
DRWN:ATSEE 2014/09/23
CH'KD:FANNYWONG 2014/09/23
APPR:LBLEE 2014/10/09
A3

REV | DESCRIPTION

QUALITY SYMBOLS
FA=0
FC=0
FP=0

GENERAL TOLERANCES (UNLESS SPECIFIED)

	mm	INCH
4 PLACES	± ---	± ---
3 PLACES	± ---	± ---
2 PLACES	± 0.2	± ---
1 PLACE	± ---	± ---
ANGULAR ± 3 °		

DRAFT WHERE APPLICABLE MUST REMAIN WITHIN DIMENSIONS

DIMENSION STYLE: MM ONLY
SCALE: NTS
DESIGN UNITS: METRIC
THIRD ANGLE PROJECTION

DRAWN BY: SKLIM01 DATE: 2006/10/09
CHECKED BY: CWLAM DATE: 2007/02/09
APPROVED BY: MLONG DATE: 2010/03/19

TITLE: CUSTOM HEADER 2.54MM PITCH DUAL ROW HEADER, SINGLE WAFER SMT

molex MOLEX INCORPORATED

MATERIAL NO.: SEE TABLE
DOCUMENT NO.: SD-87920-050
SHEET NO.: 5 OF 10
SIZE: A3

THIS DRAWING CONTAINS INFORMATION THAT IS PROPRIETARY TO MOLEX INCORPORATED AND SHOULD NOT BE USED WITHOUT WRITTEN PERMISSION

PART NUMBER IN PACKAGING OPTION			CKT SIZE	PEG	PLATE OPT.	DIMENSION					
WITH CAP IN TAPE & REEL	W/O CAP IN TUBE	WITH CAP IN TUBE				A	B	C	G	F	M
87920-2227	87920-2261	87920-2265	22	N	1	27.94	25.40	-	12.69	11.69	8.13
87920-2228	87920-2262	87920-2266	22	N	2	27.94	25.40	-	12.69	11.69	8.13
87920-2229	87920-2263	87920-2267	22	N	3	27.94	25.40	-	12.69	11.69	8.13
87920-2230	87920-2264	87920-2268	22	N	4	27.94	25.40	-	12.69	11.69	8.13
87920-2237	87920-2271	87920-2275	22	Y	1	27.94	25.40	22.86	12.69	11.69	8.13
87920-2238	87920-2272	87920-2276	22	Y	2	27.94	25.40	22.86	12.69	11.69	8.13
87920-2239	87920-2273	87920-2277	22	Y	3	27.94	25.40	22.86	12.69	11.69	8.13
87920-2240	87920-2274	87920-2278	22	Y	4	27.94	25.40	22.86	12.69	11.69	8.13
87920-2427	87920-2461	87920-2465	24	N	1	30.48	27.94	-	12.69	11.69	8.13
87920-2428	87920-2462	87920-2466	24	N	2	30.48	27.94	-	12.69	11.69	8.13
87920-2429	87920-2463	87920-2467	24	N	3	30.48	27.94	-	12.69	11.69	8.13
87920-2430	87920-2464	87920-2468	24	N	4	30.48	27.94	-	12.69	11.69	8.13
87920-2437	87920-2471	87920-2475	24	Y	1	30.48	27.94	25.40	12.69	11.69	8.13
87920-2438	87920-2472	87920-2476	24	Y	2	30.48	27.94	25.40	12.69	11.69	8.13
87920-2439	87920-2473	87920-2477	24	Y	3	30.48	27.94	25.40	12.69	11.69	8.13
87920-2440	87920-2474	87920-2478	24	Y	4	30.48	27.94	25.40	12.69	11.69	8.13
87920-2627	87920-2661	87920-2665	26	N	1	33.02	30.48	-	12.69	11.69	8.13
87920-2628	87920-2662	87920-2666	26	N	2	33.02	30.48	-	12.69	11.69	8.13
87920-2629	87920-2663	87920-2667	26	N	3	33.02	30.48	-	12.69	11.69	8.13
87920-2630	87920-2664	87920-2668	26	N	4	33.02	30.48	-	12.69	11.69	8.13
87920-2637	87920-2671	87920-2675	26	Y	1	33.02	30.48	27.94	12.69	11.69	8.13
87920-2638	87920-2672	87920-2676	26	Y	2	33.02	30.48	27.94	12.69	11.69	8.13
87920-2639	87920-2673	87920-2677	26	Y	3	33.02	30.48	27.94	12.69	11.69	8.13
87920-2640	87920-2674	87920-2678	26	Y	4	33.02	30.48	27.94	12.69	11.69	8.13

PART NUMBER IN PACKAGING OPTION			CKT SIZE	PEG	PLATE OPT.	DIMENSION					
W/O CAP IN TRAY	W/O CAP IN TUBE	WITH CAP IN TUBE				A	B	C	G	F	M
87920-2247	87920-2281	87920-2285	22	N	1	27.94	25.40	-	15.23	14.23	10.67
87920-2248	87920-2282	87920-2286	22	N	2	27.94	25.40	-	15.23	14.23	10.67
87920-2249	87920-2283	87920-2287	22	N	3	27.94	25.40	-	15.23	14.23	10.67
87920-2250	87920-2284	87920-2288	22	N	4	27.94	25.40	-	15.23	14.23	10.67
87920-2257	87920-2291	87920-2295	22	Y	1	27.94	25.40	22.86	15.23	14.23	10.67
87920-2258	87920-2292	87920-2296	22	Y	2	27.94	25.40	22.86	15.23	14.23	10.67
87920-2259	87920-2293	87920-2297	22	Y	3	27.94	25.40	22.86	15.23	14.23	10.67
87920-2260	87920-2294	87920-2298	22	Y	4	27.94	25.40	22.86	15.23	14.23	10.67
87920-2447	87920-2481	87920-2485	24	N	1	30.48	27.94	-	15.23	14.23	10.67
87920-2448	87920-2482	87920-2486	24	N	2	30.48	27.94	-	15.23	14.23	10.67
87920-2449	87920-2483	87920-2487	24	N	3	30.48	27.94	-	15.23	14.23	10.67
87920-2450	87920-2484	87920-2488	24	N	4	30.48	27.94	-	15.23	14.23	10.67
87920-2457	87920-2491	87920-2495	24	Y	1	30.48	27.94	25.40	15.23	14.23	10.67
87920-2458	87920-2492	87920-2496	24	Y	2	30.48	27.94	25.40	15.23	14.23	10.67
87920-2459	87920-2493	87920-2497	24	Y	3	30.48	27.94	25.40	15.23	14.23	10.67
87920-2460	87920-2494	87920-2498	24	Y	4	30.48	27.94	25.40	15.23	14.23	10.67
87920-2647	87920-2681	87920-2685	26	N	1	33.02	30.48	-	15.23	14.23	10.67
87920-2648	87920-2682	87920-2686	26	N	2	33.02	30.48	-	15.23	14.23	10.67
87920-2649	87920-2683	87920-2687	26	N	3	33.02	30.48	-	15.23	14.23	10.67
87920-2650	87920-2684	87920-2688	26	N	4	33.02	30.48	-	15.23	14.23	10.67
87920-2657	87920-2691	87920-2695	26	Y	1	33.02	30.48	27.94	15.23	14.23	10.67
87920-2658	87920-2692	87920-2696	26	Y	2	33.02	30.48	27.94	15.23	14.23	10.67
87920-2659	87920-2693	87920-2697	26	Y	3	33.02	30.48	27.94	15.23	14.23	10.67
87920-2660	87920-2694	87920-2698	26	Y	4	33.02	30.48	27.94	15.23	14.23	10.67

SEE SHT 2
EC NO: S2015-0282
DRWN:ATSEE 2014/09/23
CH'KD:FANNYWONG 2014/09/23
APPR:LBLEE 2014/10/09
A3

REV | DESCRIPTION

QUALITY SYMBOLS
FA=0
FC=0
FP=0

GENERAL TOLERANCES (UNLESS SPECIFIED)

	mm	INCH
4 PLACES	± ---	± ---
3 PLACES	± ---	± ---
2 PLACES	± 0.2	± ---
1 PLACE	± ---	± ---
ANGULAR ± 3 °		

DRAFT WHERE APPLICABLE MUST REMAIN WITHIN DIMENSIONS

DIMENSION STYLE: MM ONLY
SCALE: NTS
DESIGN UNITS: METRIC
THIRD ANGLE PROJECTION

DRAWN BY: SKLIM01 DATE: 2006/10/09
CHECKED BY: CWLAM DATE: 2007/02/09
APPROVED BY: MLONG DATE: 2010/03/19

TITLE: CUSTOM HEADER 2.54MM PITCH DUAL ROW HEADER, SINGLE WAFER SMT

molex MOLEX INCORPORATED

MATERIAL NO.: SEE TABLE
DOCUMENT NO.: SD-87920-050
SHEET NO.: 6 OF 10
SIZE: A3

THIS DRAWING CONTAINS INFORMATION THAT IS PROPRIETARY TO MOLEX INCORPORATED AND SHOULD NOT BE USED WITHOUT WRITTEN PERMISSION

PART NUMBER IN PACKAGING OPTION			CKT SIZE	PEG	PLATE OPT.	DIMENSION					
WITH CAP IN TAPE & REEL	W/O CAP IN TUBE	WITH CAP IN TUBE				A	B	C	G	F	M
87920-2827	87920-2861	87920-2865	28	N	1	35.56	33.02	-	12.69	11.69	8.13
87920-2828	87920-2862	87920-2866	28	N	2	35.56	33.02	-	12.69	11.69	8.13
87920-2829	87920-2863	87920-2867	28	N	3	35.56	33.02	-	12.69	11.69	8.13
87920-2830	87920-2864	87920-2868	28	N	4	35.56	33.02	-	12.69	11.69	8.13
87920-2837	87920-2871	87920-2875	28	Y	1	35.56	33.02	30.48	12.69	11.69	8.13
87920-2838	87920-2872	87920-2876	28	Y	2	35.56	33.02	30.48	12.69	11.69	8.13
87920-2839	87920-2873	87920-2877	28	Y	3	35.56	33.02	30.48	12.69	11.69	8.13
87920-2840	87920-2874	87920-2878	28	Y	4	35.56	33.02	30.48	12.69	11.69	8.13
87920-3027	87920-3061	87920-3065	30	N	1	38.10	35.56	-	12.69	11.69	8.13
87920-3028	87920-3062	87920-3066	30	N	2	38.10	35.56	-	12.69	11.69	8.13
87920-3029	87920-3063	87920-3067	30	N	3	38.10	35.56	-	12.69	11.69	8.13
87920-3030	87920-3064	87920-3068	30	N	4	38.10	35.56	-	12.69	11.69	8.13
87920-3037	87920-3071	87920-3075	30	Y	1	38.10	35.56	33.02	12.69	11.69	8.13
87920-3038	87920-3072	87920-3076	30	Y	2	38.10	35.56	33.02	12.69	11.69	8.13
87920-3039	87920-3073	87920-3077	30	Y	3	38.10	35.56	33.02	12.69	11.69	8.13
87920-3040	87920-3074	87920-3078	30	Y	4	38.10	35.56	33.02	12.69	11.69	8.13
87920-3227	87920-3261	87920-3265	32	N	1	40.64	38.10	-	12.69	11.69	8.13
87920-3228	87920-3262	87920-3266	32	N	2	40.64	38.10	-	12.69	11.69	8.13
87920-3229	87920-3263	87920-3267	32	N	3	40.64	38.10	-	12.69	11.69	8.13
87920-3230	87920-3264	87920-3268	32	N	4	40.64	38.10	-	12.69	11.69	8.13
87920-3237	87920-3271	87920-3275	32	Y	1	40.64	38.10	35.56	12.69	11.69	8.13
87920-3238	87920-3272	87920-3276	32	Y	2	40.64	38.10	35.56	12.69	11.69	8.13
87920-3239	87920-3273	87920-3277	32	Y	3	40.64	38.10	35.56	12.69	11.69	8.13
87920-3240	87920-3274	87920-3278	32	Y	4	40.64	38.10	35.56	12.69	11.69	8.13

PART NUMBER IN PACKAGING OPTION			CKT SIZE	PEG	PLATE OPT.	DIMENSION					
W/O CAP IN TRAY	W/O CAP IN TUBE	WITH CAP IN TUBE				A	B	C	G	F	M
87920-2847	87920-2881	87920-2885	28	N	1	35.56	33.02	-	15.23	14.23	10.67
87920-2848	87920-2882	87920-2886	28	N	2	35.56	33.02	-	15.23	14.23	10.67
87920-2849	87920-2883	87920-2887	28	N	3	35.56	33.02	-	15.23	14.23	10.67
87920-2850	87920-2884	87920-2888	28	N	4	35.56	33.02	-	15.23	14.23	10.67
87920-2857	87920-2891	87920-2895	28	Y	1	35.56	33.02	30.48	15.23	14.23	10.67
87920-2858	87920-2892	87920-2896	28	Y	2	35.56	33.02	30.48	15.23	14.23	10.67
87920-2859	87920-2893	87920-2897	28	Y	3	35.56	33.02	30.48	15.23	14.23	10.67
87920-2860	87920-2894	87920-2898	28	Y	4	35.56	33.02	30.48	15.23	14.23	10.67
87920-3047	87920-3081	87920-3085	30	N	1	38.10	35.56	-	15.23	14.23	10.67
87920-3048	87920-3082	87920-3086	30	N	2	38.10	35.56	-	15.23	14.23	10.67
87920-3049	87920-3083	87920-3087	30	N	3	38.10	35.56	-	15.23	14.23	10.67
87920-3050	87920-3084	87920-3088	30	N	4	38.10	35.56	-	15.23	14.23	10.67
87920-3057	87920-3091	87920-3095	30	Y	1	38.10	35.56	33.02	15.23	14.23	10.67
87920-3058	87920-3092	87920-3096	30	Y	2	38.10	35.56	33.02	15.23	14.23	10.67
87920-3059	87920-3093	87920-3097	30	Y	3	38.10	35.56	33.02	15.23	14.23	10.67
87920-3060	87920-3094	87920-3098	30	Y	4	38.10	35.56	33.02	15.23	14.23	10.67
87920-3247	87920-3281	87920-3285	32	N	1	40.64	38.10	-	15.23	14.23	10.67
87920-3248	87920-3282	87920-3286	32	N	2	40.64	38.10	-	15.23	14.23	10.67
87920-3249	87920-3283	87920-3287	32	N	3	40.64	38.10	-	15.23	14.23	10.67
87920-3250	87920-3284	87920-3288	32	N	4	40.64	38.10	-	15.23	14.23	10.67
87920-3257	87920-3291	87920-3295	32	Y	1	40.64	38.10	35.56	15.23	14.23	10.67
87920-3258	87920-3292	87920-3296	32	Y	2	40.64	38.10	35.56	15.23	14.23	10.67
87920-3259	87920-3293	87920-3297	32	Y	3	40.64	38.10	35.56	15.23	14.23	10.67
87920-3260	87920-3294	87920-3298	32	Y	4	40.64	38.10	35.56	15.23	14.23	10.67

SEE SHT 2
EC NO: S2015-0282
DRWN:ATSEE 2014/09/23
CH'KD:FANNYWONG 2014/09/23
APPR:LBLEE 2014/10/09
A3

REV | DESCRIPTION

QUALITY SYMBOLS
FA=0
FC=0
FP=0

GENERAL TOLERANCES (UNLESS SPECIFIED)

	mm	INCH
4 PLACES	± ---	± ---
3 PLACES	± ---	± ---
2 PLACES	± 0.2	± ---
1 PLACE	± ---	± ---
ANGULAR ± 3 °		

DRAFT WHERE APPLICABLE MUST REMAIN WITHIN DIMENSIONS

DIMENSION STYLE: MM ONLY
SCALE: NTS
DESIGN UNITS: METRIC
THIRD ANGLE PROJECTION

DRAWN BY: SKLIM01 DATE: 2006/10/09
CHECKED BY: CWLAM DATE: 2007/02/09
APPROVED BY: MLONG DATE: 2010/03/19

TITLE: CUSTOM HEADER 2.54MM PITCH DUAL ROW HEADER, SINGLE WAFER SMT

molex MOLEX INCORPORATED

MATERIAL NO.: SEE TABLE
DOCUMENT NO.: SD-87920-050
SHEET NO.: 7 OF 10
SIZE: A3

THIS DRAWING CONTAINS INFORMATION THAT IS PROPRIETARY TO MOLEX INCORPORATED AND SHOULD NOT BE USED WITHOUT WRITTEN PERMISSION

PART NUMBER IN PACKAGING OPTION			CKT SIZE	PEG	PLATE OPT.	DIMENSION					
WITH CAP IN TAPE & REEL	W/O CAP IN TUBE	WITH CAP IN TUBE				A	B	C	G	F	M
87920-3427	87920-3461	87920-3465	34	N	1	43.18	40.64	-	12.69	11.69	8.13
87920-3428	87920-3462	87920-3466	34	N	2	43.18	40.64	-	12.69	11.69	8.13
87920-3429	87920-3463	87920-3467	34	N	3	43.18	40.64	-	12.69	11.69	8.13
87920-3430	87920-3464	87920-3468	34	N	4	43.18	40.64	-	12.69	11.69	8.13
87920-3437	87920-3471	87920-3475	34	Y	1	43.18	40.64	38.10	12.69	11.69	8.13
87920-3438	87920-3472	87920-3476	34	Y	2	43.18	40.64	38.10	12.69	11.69	8.13
87920-3439	87920-3473	87920-3477	34	Y	3	43.18	40.64	38.10	12.69	11.69	8.13
87920-3440	87920-3474	87920-3478	34	Y	4	43.18	40.64	38.10	12.69	11.69	8.13

PART NUMBER IN PACKAGING OPTION			CKT SIZE	PEG	PLATE OPT.	DIMENSION					
W/O CAP IN TRAY	W/O CAP IN TUBE	WITH CAP IN TUBE				A	B	C	G	F	M
87920-3447	87920-3481	87920-3485	34	N	1	43.18	40.64	-	15.23	14.23	10.67
87920-3448	87920-3482	87920-3486	34	N	2	43.18	40.64	-	15.23	14.23	10.67
87920-3449	87920-3483	87920-3487	34	N	3	43.18	40.64	-	15.23	14.23	10.67
87920-3450	87920-3484	87920-3488	34	N	4	43.18	40.64	-	15.23	14.23	10.67
87920-3457	87920-3491	87920-3495	34	Y	1	43.18	40.64	38.10	15.23	14.23	10.67
87920-3458	87920-3492	87920-3496	34	Y	2	43.18	40.64	38.10	15.23	14.23	10.67
87920-3459	87920-3493	87920-3497	34	Y	3	43.18	40.64	38.10	15.23	14.23	10.67
87920-3460	87920-3494	87920-3498	34	Y	4	43.18	40.64	38.10	15.23	14.23	10.67

PART NUMBER IN PACKAGING OPTION			CKT SIZE	PEG	PLATE OPT.	DIMENSION					
W/O CAP IN TRAY	W/O CAP IN TUBE	WITH CAP IN TUBE				A	B	C	G	F	M
87920-3627	87920-3661	87920-3665	36	N	1	45.72	43.18	-	12.69	11.69	8.13
87920-3628	87920-3662	87920-3666	36	N	2	45.72	43.18	-	12.69	11.69	8.13
87920-3629	87920-3663	87920-3667	36	N	3	45.72	43.18	-	12.69	11.69	8.13
87920-3630	87920-3664	87920-3668	36	N	4	45.72	43.18	-	12.69	11.69	8.13
87920-3637	87920-3671	87920-3675	36	Y	1	45.72	43.18	40.64	12.69	11.69	8.13
87920-3638	87920-3672	87920-3676	36	Y	2	45.72	43.18	40.64	12.69	11.69	8.13
87920-3639	87920-3673	87920-3677	36	Y	3	45.72	43.18	40.64	12.69	11.69	8.13
87920-3640	87920-3674	87920-3678	36	Y	4	45.72	43.18	40.64	12.69	11.69	8.13

PART NUMBER IN PACKAGING OPTION			CKT SIZE	PEG	PLATE OPT.	DIMENSION					
W/O CAP IN TRAY	W/O CAP IN TUBE	WITH CAP IN TUBE				A	B	C	G	F	M
87920-3647	87920-3681	87920-3685	36	N	1	45.72	43.18	-	15.23	14.23	10.67
87920-3648	87920-3682	87920-3686	36	N	2	45.72	43.18	-	15.23	14.23	10.67
87920-3649	87920-3683	87920-3687	36	N	3	45.72	43.18	-	15.23	14.23	10.67
87920-3650	87920-3684	87920-3688	36	N	4	45.72	43.18	-	15.23	14.23	10.67
87920-3657	87920-3691	87920-3695	36	Y	1	45.72	43.18	40.64	15.23	14.23	10.67
87920-3658	87920-3692	87920-3696	36	Y	2	45.72	43.18	40.64	15.23	14.23	10.67
87920-3659	87920-3693	87920-3697	36	Y	3	45.72	43.18	40.64	15.23	14.23	10.67
87920-3660	87920-3694	87920-3698	36	Y	4	45.72	43.18	40.64	15.23	14.23	10.67

SEE SHT 2
EC NO: S2015-0282
DRWN:ATSEE 2014/09/23
CH'KD:FANNYWONG 2014/09/23
APPR:LBLEE 2014/10/09
A3

REV | DESCRIPTION

QUALITY SYMBOLS
F/A=0
F/C=0
F/P=0

GENERAL TOLERANCES (UNLESS SPECIFIED)

	mm	INCH
4 PLACES	± ---	± ---
3 PLACES	± ---	± ---
2 PLACES	± 0.2	± ---
1 PLACE	± ---	± ---
ANGULAR ± 3 °		

DRAFT WHERE APPLICABLE MUST REMAIN WITHIN DIMENSIONS

DIMENSION STYLE: MM ONLY
SCALE: NTS
DESIGN UNITS: METRIC
THIRD ANGLE PROJECTION

DRAWN BY: SKLIM01 DATE: 2006/10/09
CHECKED BY: CWLAM DATE: 2007/02/09
APPROVED BY: MLONG DATE: 2010/03/19
MATERIAL NO.: SEE TABLE

TITLE: CUSTOM HEADER 2.54MM PITCH DUAL ROW HEADER, SINGLE WAFER SMT

molex MOLEX INCORPORATED

DOCUMENT NO.: SD-87920-050
SHEET NO.: 8 OF 10

SIZE: A3

THIS DRAWING CONTAINS INFORMATION THAT IS PROPRIETARY TO MOLEX INCORPORATED AND SHOULD NOT BE USED WITHOUT WRITTEN PERMISSION

PART NUMBER IN PACKAGING OPTION			CKT SIZE	PEG	PLATE OPT.	DIMENSION					
W/O CAP IN TRAY	W/O CAP IN TUBE	WITH CAP IN TUBE				A	B	C	G	F	M
87920-3827	87920-3861	87920-3865	38	N	1	48.26	45.72	-	12.69	11.69	8.13
87920-3828	87920-3862	87920-3866	38	N	2	48.26	45.72	-	12.69	11.69	8.13
87920-3829	87920-3863	87920-3867	38	N	3	48.26	45.72	-	12.69	11.69	8.13
87920-3830	87920-3864	87920-3868	38	N	4	48.26	45.72	-	12.69	11.69	8.13
87920-3837	87920-3871	87920-3875	38	Y	1	48.26	45.72	43.18	12.69	11.69	8.13
87920-3838	87920-3872	87920-3876	38	Y	2	48.26	45.72	43.18	12.69	11.69	8.13
87920-3839	87920-3873	87920-3877	38	Y	3	48.26	45.72	43.18	12.69	11.69	8.13
87920-3840	87920-3874	87920-3878	38	Y	4	48.26	45.72	43.18	12.69	11.69	8.13
87920-4027	87920-4061	87920-4065	40	N	1	50.80	48.26	-	12.69	11.69	8.13
87920-4028	87920-4062	87920-4066	40	N	2	50.80	48.26	-	12.69	11.69	8.13
87920-4029	87920-4063	87920-4067	40	N	3	50.80	48.26	-	12.69	11.69	8.13
87920-4030	87920-4064	87920-4068	40	N	4	50.80	48.26	-	12.69	11.69	8.13
87920-4037	87920-4071	87920-4075	40	Y	1	50.80	48.26	45.72	12.69	11.69	8.13
87920-4038	87920-4072	87920-4076	40	Y	2	50.80	48.26	45.72	12.69	11.69	8.13
87920-4039	87920-4073	87920-4077	40	Y	3	50.80	48.26	45.72	12.69	11.69	8.13
87920-4040	87920-4074	87920-4078	40	Y	4	50.80	48.26	45.72	12.69	11.69	8.13

PART NUMBER IN PACKAGING OPTION			CKT SIZE	PEG	PLATE OPT.	DIMENSION					
W/O CAP IN TRAY	W/O CAP IN TUBE	WITH CAP IN TUBE				A	B	C	G	F	M
87920-3847	87920-3881	87920-3885	38	N	1	48.26	45.72	-	15.23	14.23	10.67
87920-3848	87920-3882	87920-3886	38	N	2	48.26	45.72	-	15.23	14.23	10.67
87920-3849	87920-3883	87920-3887	38	N	3	48.26	45.72	-	15.23	14.23	10.67
87920-3850	87920-3884	87920-3888	38	N	4	48.26	45.72	-	15.23	14.23	10.67
87920-3857	87920-3891	87920-3895	38	Y	1	48.26	45.72	43.18	15.23	14.23	10.67
87920-3858	87920-3892	87920-3896	38	Y	2	48.26	45.72	43.18	15.23	14.23	10.67
87920-3859	87920-3893	87920-3897	38	Y	3	48.26	45.72	43.18	15.23	14.23	10.67
87920-3860	87920-3894	87920-3898	38	Y	4	48.26	45.72	43.18	15.23	14.23	10.67
87920-4047	87920-4081	87920-4085	40	N	1	50.80	48.26	-	15.23	14.23	10.67
87920-4048	87920-4082	87920-4086	40	N	2	50.80	48.26	-	15.23	14.23	10.67
87920-4049	87920-4083	87920-4087	40	N	3	50.80	48.26	-	15.23	14.23	10.67
87920-4050	87920-4084	87920-4088	40	N	4	50.80	48.26	-	15.23	14.23	10.67
87920-4057	87920-4091	87920-4095	40	Y	1	50.80	48.26	45.72	15.23	14.23	10.67
87920-4058	87920-4092	87920-4096	40	Y	2	50.80	48.26	45.72	15.23	14.23	10.67
87920-4059	87920-4093	87920-4097	40	Y	3	50.80	48.26	45.72	15.23	14.23	10.67
87920-4060	87920-4094	87920-4098	40	Y	4	50.80	48.26	45.72	15.23	14.23	10.67

SEE SHT 2
EC NO: S2015-0282
DRWN:ATSEE 2014/09/23
CH'KD:FANNYWONG 2014/09/23
APPR:LBLEE 2014/10/09
A3

REV | DESCRIPTION

QUALITY SYMBOLS
F_A=0
F_C=0
F_P=0

GENERAL TOLERANCES (UNLESS SPECIFIED)

	mm	INCH
4 PLACES	± ---	± ---
3 PLACES	± ---	± ---
2 PLACES	± 0.2	± ---
1 PLACE	± ---	± ---
ANGULAR ± 3 °		

DRAFT WHERE APPLICABLE MUST REMAIN WITHIN DIMENSIONS

DIMENSION STYLE: MM ONLY
SCALE: NTS
DESIGN UNITS: METRIC
THIRD ANGLE PROJECTION

DRAWN BY: SKLIM01 DATE: 2006/10/09
CHECKED BY: CWLAM DATE: 2007/02/09
APPROVED BY: MLONG DATE: 2010/03/19
MATERIAL NO.: SEE TABLE

TITLE: CUSTOM HEADER 2.54MM PITCH DUAL ROW HEADER, SINGLE WAFER SMT

molex MOLEX INCORPORATED

DOCUMENT NO.: SD-87920-050
SHEET NO.: 9 OF 10

SIZE: A3

THIS DRAWING CONTAINS INFORMATION THAT IS PROPRIETARY TO MOLEX INCORPORATED AND SHOULD NOT BE USED WITHOUT WRITTEN PERMISSION

SPECIAL OPTION

PART NUMBER IN PACKAGING OPTION		CKT SIZE	PEG	PLATE OPT.	DIMENSION						
					A	B	C	G	F	CKT LOCATION	
WITH CAP IN TAPE & REEL	WITH CAP IN TUBE									M = 10.67	M = 0
87920-1201	87920-1202	12	Y	4	15.24	12.70	10.16	15.23	14.23	3, 4, 5, 6, 7, 8, 9, 10	1, 2, 11, 11, 12

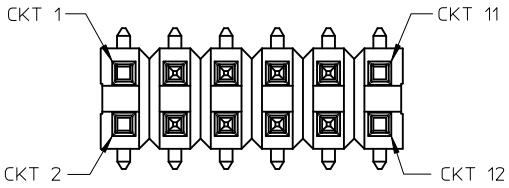

12 CKT WITH SPECIAL OPTION

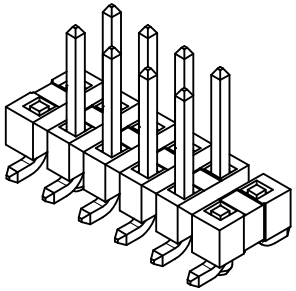

(PART WITHOUT CAP FOR ILLUSTRATION ONLY)

SEE SHT 2	EC NO: S2015-0282	DRWN:ATSEE 2014/09/23	CH'KD:FANNYWONG 2014/09/23
APPR:LBLEE 2014/10/09	DESCRIPTION	REV	
A3			

QUALITY SYMBOLS

F_A=0

F_C=0

F_P=0

GENERAL TOLERANCES (UNLESS SPECIFIED)

	mm	INCH
4 PLACES	± ---	± ---
3 PLACES	± ---	± ---
2 PLACES	± 0.2	± ---
1 PLACE	± ---	± ---
ANGULAR ± 3 °		

DRAFT WHERE APPLICABLE MUST REMAIN WITHIN DIMENSIONS

DIMENSION STYLE: MM ONLY	SCALE: NTS	DESIGN UNITS: METRIC	THIRD ANGLE PROJECTION
DRAWN BY: SKLIM01	DATE: 2006/10/09	TITLE: CUSTOM HEADER 2.54MM PITCH DUAL ROW HEADER, SINGLE WAFER SMT	
CHECKED BY: CWLAM	DATE: 2007/02/09		
APPROVED BY: MLONG	DATE: 2010/03/19	molex MOLEX INCORPORATED	
MATERIAL NO.: SEE TABLE		DOCUMENT NO.: SD-87920-050	SHEET NO.: 10 OF 10
SIZE: A3			

THIS DRAWING CONTAINS INFORMATION THAT IS PROPRIETARY TO MOLEX INCORPORATED AND SHOULD NOT BE USED WITHOUT WRITTEN PERMISSION

Mouser Electronics

Authorized Distributor

Click to View Pricing, Inventory, Delivery & Lifecycle Information:

Molex:

87920-1214 87920-1224