THIS DRAWING IS UNPUBLISHED. RELEASED FOR PUBLICATION 20
© COPYRIGHT 20 BY TYCO ELECTRONICS CORPORATION, ALL INTERNATIONAL RIGHTS RESERVED.

LOC	DIST
HK	00

REVISIONS

P	LTR	DESCRIPTION	DATE	DWN	APVD
	F1	REVISED PER ECR-08-006840	17MAR2008	JM	JM
	G	REVISED PER ECO-10-022116	29OCT2010	DD	DR

TE NO.	POSN	A	B	C	D	E	F	COLOR
1456315-1	24	7.50	12.00	9.00	9.00	39.2	35,5	BLACK
1456315-2	24	7.50	11.00	11.00	9.00	39.2	35,5	BLACK
1456315-3	24	7.50	11.00	11.00	12.00	39.2	35,5	GREY
1456315-4	24	9.00	11.00	11.00	9.00	39.2	35,5	GREY
1456315-5	32	12.00	12.00	12.00	9.00	49.2	45.5	BLACK
1456315-6	32	12.00	12.00	12.00	9.00	49.2	45.5	BLACK
1456315-7	24	7.50	11.00	11.00	12.00	39.2	35,5	GREY
1456315-8	24	9.00	11.00	11.00	9.00	39.2	35,5	GREY
1456315-9	24	7.50	11.00	11.00	12.00	39.2	35,5	GREY
1-1456315-0	24	7.50	11.00	11.00	12.00	39.2	35,5	GREY
1-1456315-1	24	9.00	11.00	11.00	9.00	39.2	35,5	GREY
1-1456315-2	24	9.00	11.00	11.00	9.00	39.2	35,5	GREY
1-1456315-3	24	7.50	12.00	9.00	9.00	39.2	35,5	BLACK
1-1456315-4	24	7.50	11.00	11.00	9.00	39.2	35,5	BLACK
1-1456315-5	24	7.50	11.00	11.00	12.00	39.2	35,5	GREY
1-1456315-6	24	9.00	11.00	11.00	9.00	39.2	35,5	GREY
1-1456315-7	24	9.00	11.00	11.00	9.00	39.2	35,5	GREY
1-1456315-8	24	7.50	11.00	11.00	12.00	39.2	35,5	GREY
1-1456315-9	24	9.00	11.00	11.00	9.00	39.2	35,5	GREY
2-1456315-0	32	12.00	12.00	12.00	9.00	49.2	45.5	BLACK

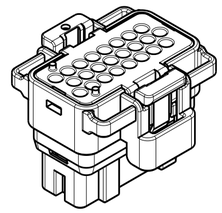

24 POSITION ASSY
SCALE 1.000

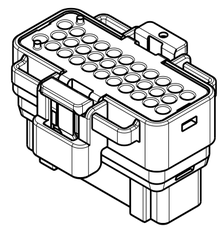

32 POSITION ASSY
SCALE 1.000

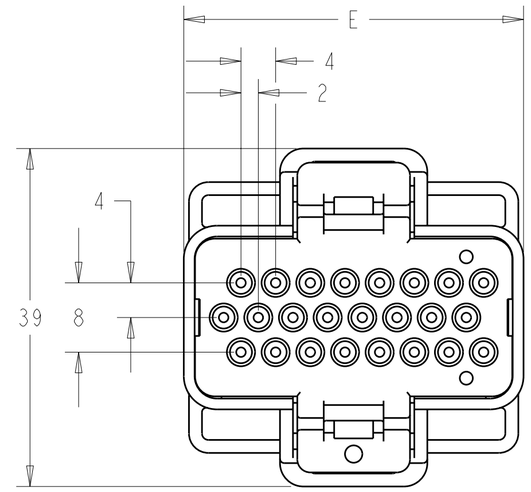

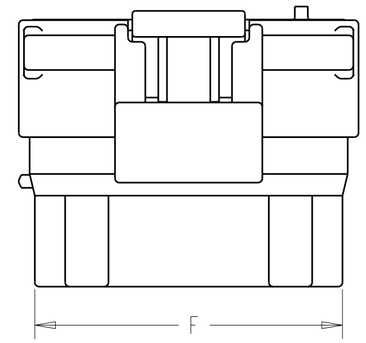

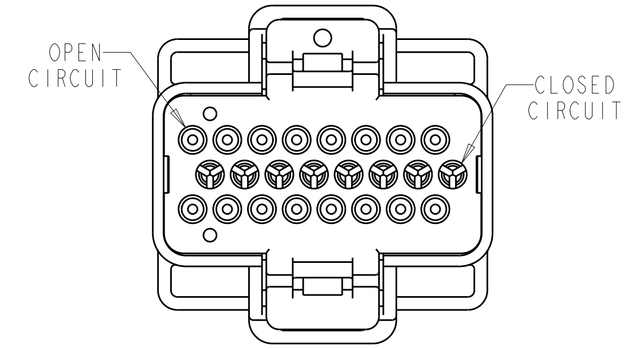

1456315-1 DISPLAYED

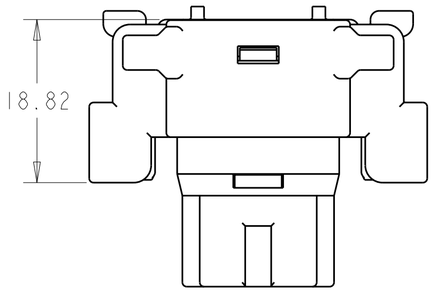

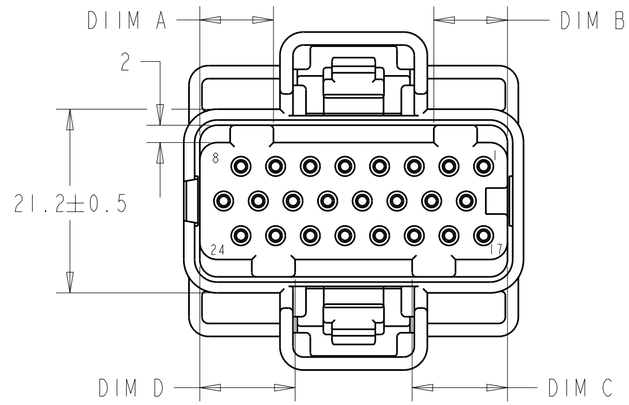

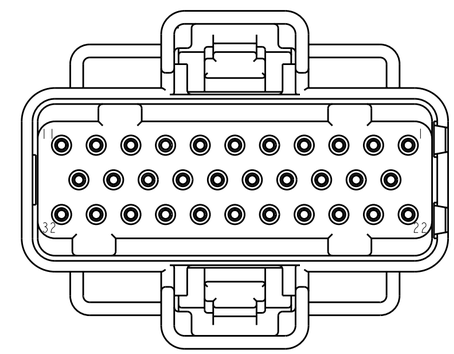

Part Number	SIZE	1	2	3	4	5	6	7	8	9	10	11	12	13	14	15	16	17	18	19	20	21	22	23	24	25	26	27	28	29	30	31	32
		Complexity Matrix Position Number																								Not Applicable X / Closed Position O							
1456315-1	24									O	O	O	O	O	O	O	O									X	X	X	X	X	X	X	X
1456315-2	24									O	O	O	O	O	O	O	O									X	X	X	X	X	X	X	X
1456315-3	24			O	O	O								O		O	O						O	O		X	X	X	X	X	X	X	X
1456315-4	24		O		O	O					O	O				O	O	O	O		O	O	O	O		X	X	X	X	X	X	X	X
1456315-5	32						O			O		O	O	O	O	O	O	O	O	O	O	O											
1456315-6	32						O					O	O	O	O	O	O	O	O	O	O	O							O	O			
1456315-7	24			O	O	O								O									O	O		X	X	X	X	X	X	X	X
1456315-8	24		O		O	O						O				O	O	O	O		O	O	O	O		X	X	X	X	X	X	X	X
1456315-9	24			O	O	O								O								O	O	O		X	X	X	X	X	X	X	X
1-1456315-0	24			O	O	O								O				O				O	O	O		X	X	X	X	X	X	X	X
1-1456315-1	24		O		O	O					O					O		O		O	O	O	O	O		X	X	X	X	X	X	X	X
1-1456315-2	24		O		O	O					O	O				O	O	O	O	O	O	O	O	O		X	X	X	X	X	X	X	X
1-1456315-3	24				O			O		O	O	O	O	O	O	O	O					O	O			X	X	X	X	X	X	X	X
1-1456315-4	24			O				O		O	O	O	O	O	O	O	O							O	O	X	X	X	X	X	X	X	X
1-1456315-5	24			O	O	O								O									O	O		X	X	X	X	X	X	X	X
1-1456315-6	24		O		O	O		O		O		O				O	O	O	O	O	O	O	O	O		X	X	X	X	X	X	X	X
1-1456315-7	24		O		O	O				O	O	O				O	O	O	O	O	O	O	O	O		X	X	X	X	X	X	X	X
1-1456315-8	24			O	O	O																	O			X	X	X	X	X	X	X	X
1-1456315-9	24				O	O		O	O	O	O					O	O	O		O	O	O	O	O		X	X	X	X	X	X	X	X
2-1456315-0	32						O			O		O	O	O	O	O	O	O	O	O	O	O											O

1471-9 (2/09)

Recomended Terminal	
TE P/N	AWG
0-1437284-9	20-18
1-1437284-0	16

THIS DRAWING IS A CONTROLLED DOCUMENT FOR TYCO ELECTRONICS CORPORATION. IT IS SUBJECT TO CHANGE AND THE CONTROLLING ENGINEERING ORGANIZATION SHOULD BE CONTACTED FOR THE LATEST REVISION.

DIMENSIONS: mm

TOLERANCES UNLESS OTHERWISE SPECIFIED:
0 PLC ±1.0
1 PLC ±0.3
2 PLC ±0.15
3 PLC ±0.070
4 PLC ±0.050
ANGLES ±2°

MATERIAL -
FINISH -

DWN R. HARDISON 08JUN2001
CHK R. HARDISON 08JUN2001
APVD R. HARDISON 08JUN2001

PRODUCT SPEC -
APPLICATION SPEC -
WEIGHT -

Tyco Electronics
Tyco Electronics
Harrisburg, PA 17105-3608

NAME
SOCKET ASSY, FOR 1.0mm MIP CONN SYS
SELECTIVELY LOADED STRAIN RELIEF
SIEMENS AUTOMOTIVE

SIZE	CAGE CODE	DRAWING NO	RESTRICTED TO
A2	00779	C-1456315	-

CUSTOMER DRAWING | SCALE 2:1 | SHEET 1 OF 1 | REV G

Pro/ENGINEER DRAWING

Mouser Electronics

Authorized Distributor

Click to View Pricing, Inventory, Delivery & Lifecycle Information:

TE Connectivity:

1456315-1