Compression Terminal

151-R225-E

KOBICONN

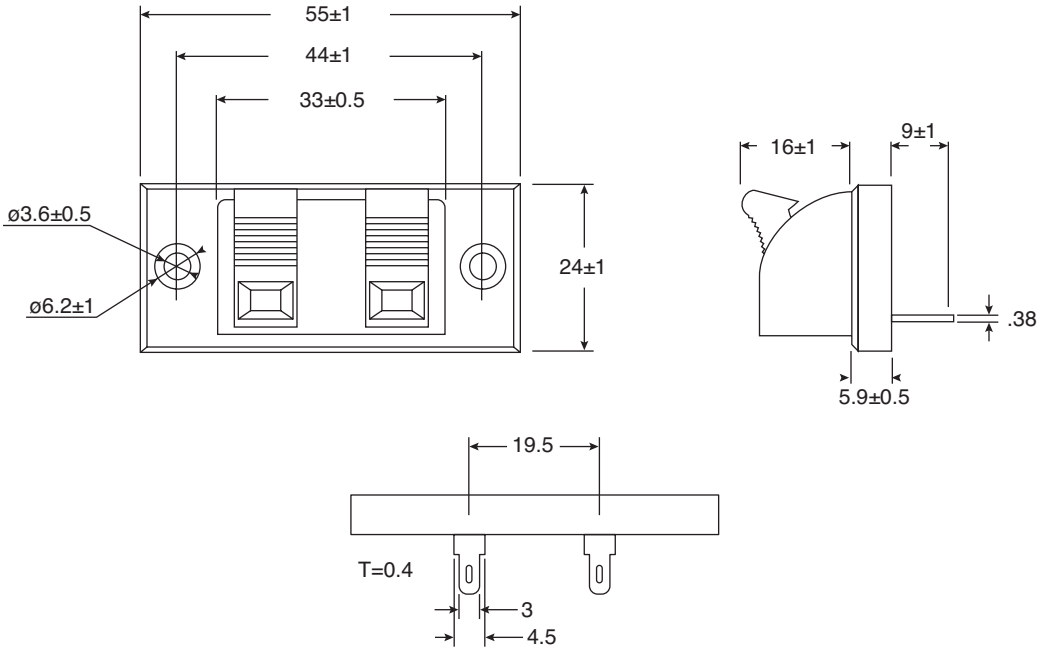

Dimensions: mm

SPECIFICATIONS	
Rating:	10A 125VAC
Recommended Wire AWG:	#22, Dia. 0.643mm
Insulation Resistance:	DC 500V 100MΩ Min.
Dielectric Voltage:	AC 1000V 1 Min.
RoHS Compliant	

Compression Terminal

151-R225-E

Date Last Revised: 07-19-11

Available from Mouser Electronics
1-800-346-6873 / www.mouser.com

KC-301250

Specifications are subject to change without notice. No liability or warranty implied by this information. Environmental compliance based on producer documentation.

Mouser Electronics

Authorized Distributor

Click to View Pricing, Inventory, Delivery & Lifecycle Information:

Kobiconn:
151-R225-E