THIS DRAWING IS UNPUBLISHED. RELEASED FOR PUBLICATION -,- .
© COPYRIGHT - By - ALL RIGHTS RESERVED.

LOC	DIST
AA	00

REVISIONS

P	LTR	DESCRIPTION	DATE	DWN	APVD
	F2	REVISED PER ECO-11-005033	29MAR11	RK	HMR

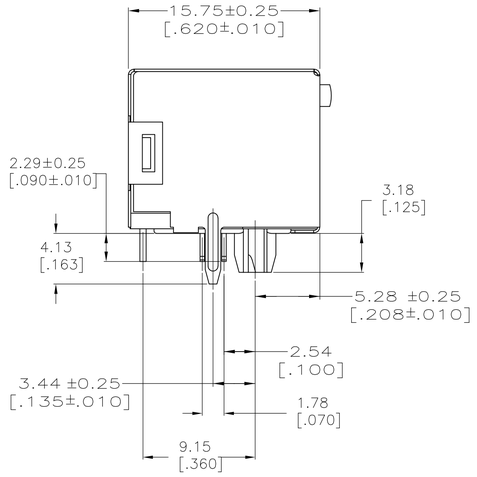

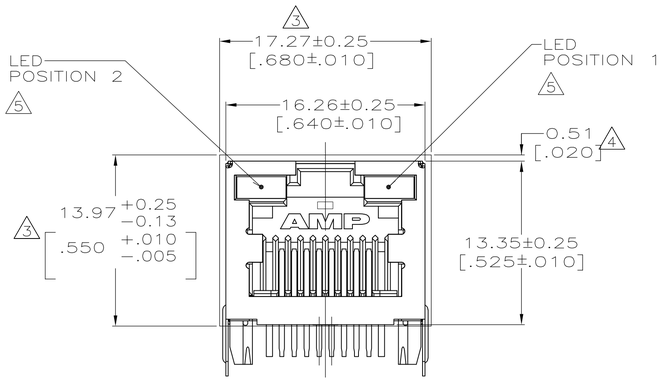

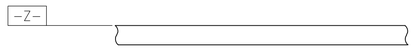

1. MATERIAL:
   HOUSING – HIGH TEMPERATURE THERMOPLASTIC, COLOR: BLACK, UL94V-0
   TERMINALS – 0.36[.014] THICK PHOS BRONZE PLATED WITH 3.81μm[.000150] MIN THICK BRIGHT TIN LEAD IN SOLDER AREA, 1.27μm[.000050] MIN GOLD IN LOCALIZED PLATE AREA. ENTIRE TERMINAL PLATED WITH 1.27μm[.000050] MIN THICK NICKEL.
   SHIELD – 0.196[.0077] THICK COPPER ZINC ALLOY PREPLATED WITH 1.27μm[.000050] MIN SATIN NICKEL WITH 2.03μm[.000080] MIN TIN POST DIPPED ON PCB GROUND TABS
   LIGHT EMITTING DIODE (LED) – DIFFUSED EPOXY LENS, 0.51 X 0.51[.020 X .020] CARBON STEEL WIREFRAME LEADS PLATED WITH 8.89μm[.000350] TIN/COPPER OVER 2.03μm[.000080] SILVER OVER 1.02μm[.000040] NICKEL UNDERPLATE OVER 2.03μm[.000080] COPPER UNDERPLATE

2. JACK CAVITY CONFORMS TO FCC RULES AND REGULATIONS PART 68, SUBPART F.

3. RECOMMENDED PANEL OPENING DIMENSIONS.

4. RECOMMENDED CLEARANCE BETWEEN TOP OF CONNECTOR AND TOP PANEL OPENING.

5. SEE TABLE FOR COLOR OF LEDS AND NUMBER REQUIRED.

6. THIS MODULAR JACK WITH INTEGRATED LED IS NOT IR REFLOW SOLDERING PROCESS COMPATIBLE.

7. OBSOLETE PARTS: OBSOLETE CIS STREAMLINING PER D.RENAUD/D.SINISI

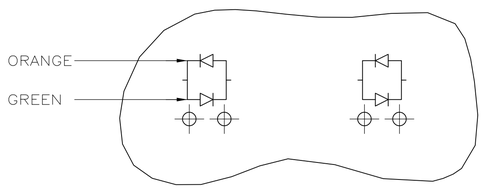

LED CURRENT DIAGRAM
1116075-7 ONLY

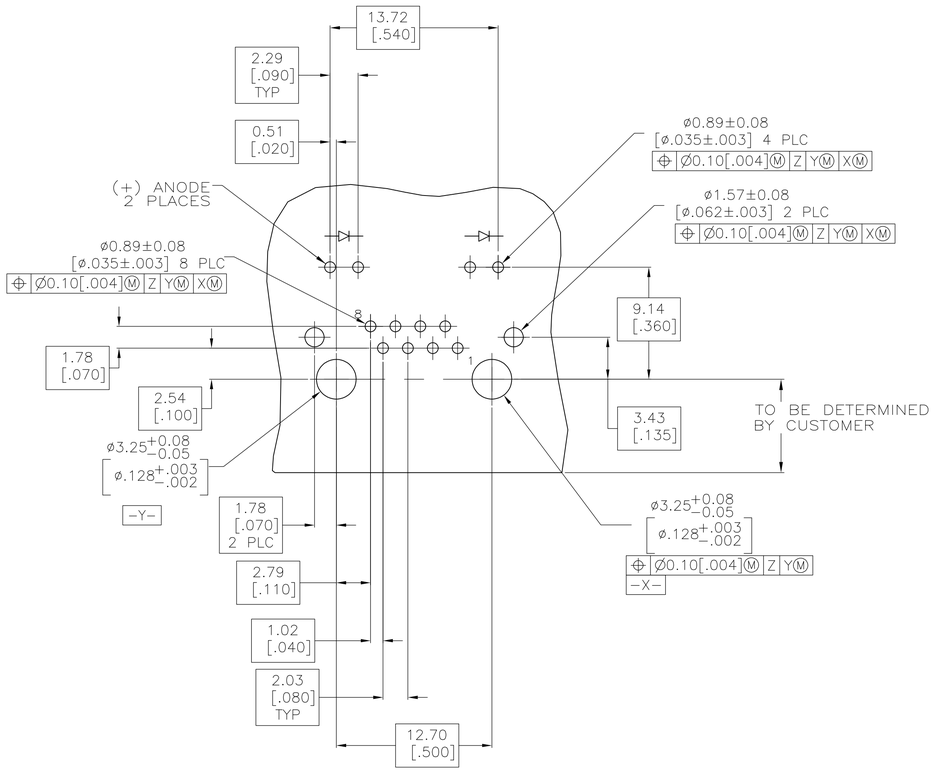

RECOMMENDED PRINTED CIRCUIT BOARD LAYOUT
(COMPONENT SIDE)

	INDICATOR COLOR		PART NUMBER
OBSOLETE	YELLOW/GREEN	YELLOW/GREEN	~~1116075-8~~
	ORANGE/GREEN	ORANGE/GREEN	1116075-7
	YELLOW	YELLOW	1116075-6
	GREEN	GREEN	1116075-5
	GREEN	YELLOW	1116075-4
7 OBSOLETE	YELLOW	–	~~1116075-3~~
	–	GREEN	1116075-2
	YELLOW	GREEN	1116075-1
	POSITION 2	POSITION 1	

THIS DRAWING IS A CONTROLLED DOCUMENT.

DIMENSIONS: mm

TOLERANCES UNLESS OTHERWISE SPECIFIED:
0 PLC ± –
1 PLC ± –
2 PLC ± 0.25[.01]
3 PLC ± 0.13[.005]
4 PLC ± –
ANGLES ± –

MATERIAL: SEE NOTE 1
FINISH: SEE NOTE 1

DWN T. SPRINKLE 08DEC97
CHK T. SPRINKLE 08DEC97
APVD M. DERSTINE 08DEC97
PRODUCT SPEC 114-2154
APPLICATION SPEC 108-1163-4
WEIGHT –

TE Connectivity

NAME: INVERTED MODULAR JACK ASSEMBLY, 1X1, SHIELDED, LED
–

SIZE	CAGE CODE	DRAWING NO	RESTRICTED TO
A1	00779	C-1116075	–

CUSTOMER DRAWING
SCALE 4:1 SHEET 1 OF 1 REV F2

4805 (3/11)

Mouser Electronics

Authorized Distributor

Click to View Pricing, Inventory, Delivery & Lifecycle Information:

TE Connectivity:

1116075-4