ERbic Profibus, horizontal, reversed

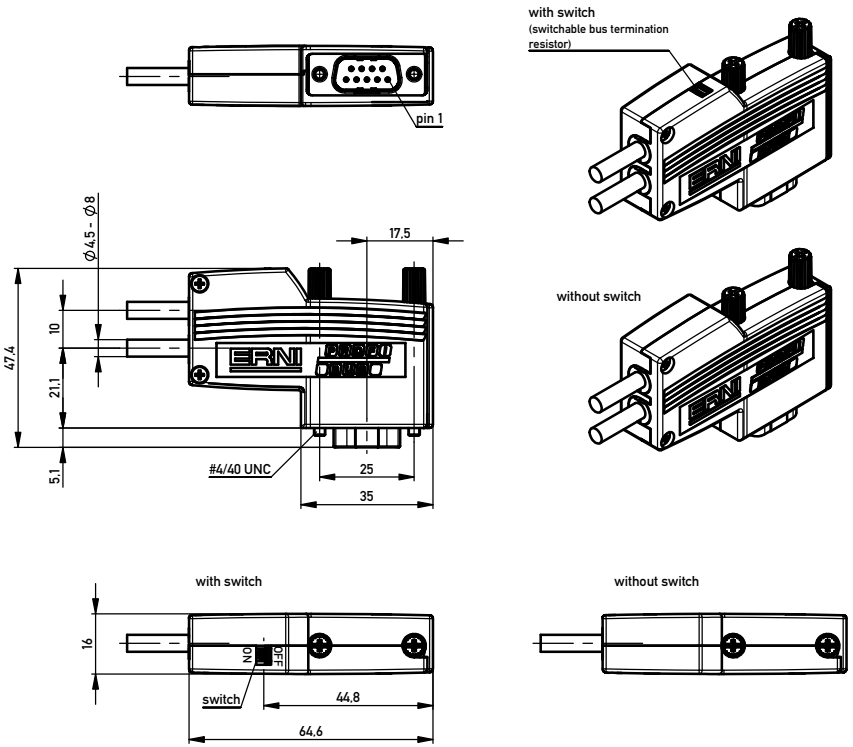

134109	Switch	without	Screw clamp 4 pin	pebble grey	A- and B Line	#4-40 UNC
144176			IDC terminal 2x2 pin			
104577	Node		Screw clamp 4 pin			
104322	Termination		Screw clamp 2 pin	yellow		
Part number	Type	Programming interface (PU)	Cable termination	Colour	Signals / Power supply	Fastening screw thread

ERbic Profibus with PU interface, horizontal, reversed

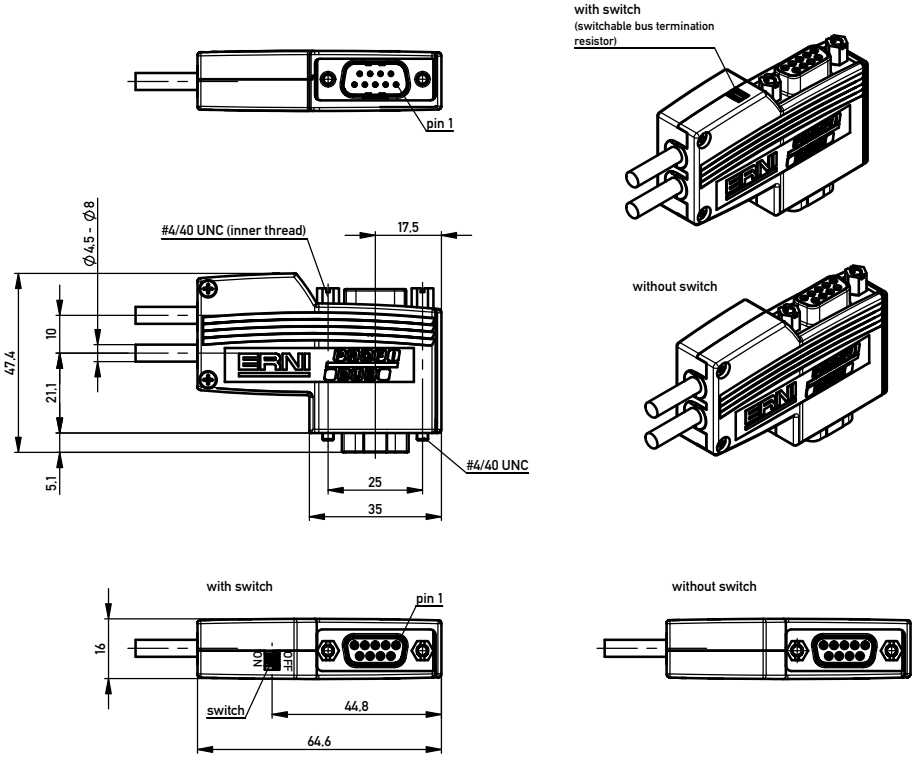

154842	Switch	with	IDC terminal 2x2 pin	pebble grey	A- and B Line	#4-40 UNC
Part number	Type	Programming interface (PU)	Cable termination	Colour	Signals / Power supply	Fastening screw thread

Notes:

1. Operating temperature: -20°C / +70°C
2. Protection class: IP40
3. Sealing plate: Drawing number 103356.

Information:	Tolerances	All Dimensions in mm	Scale 1:1
			Angaben zu entsprechender Ident-Nr. siehe Fertigungsunterlagen. *For further information about I.D. number see manufacturing document.*
All rights reserved. Only for Information. To ensure that this is the latest version of this drawing, please contact one of the ERNI companies before using.	Subject to modification without prior notice. Drawing will not be updated.		Designation: ERbic horiz.rev. Profibus *General plan*
		ERNI www.ERNI.com	324262 — I — A2
Index	Date		Class: ERBIC

Copyright by ERNI GmbH
Proprietary notice pursuant to ISO 16016 to be observed

Mouser Electronics

Authorized Distributor

Click to View Pricing, Inventory, Delivery & Lifecycle Information:

ERNI Electronics:

104577