## ERbic Profibus, horizontal, reversed

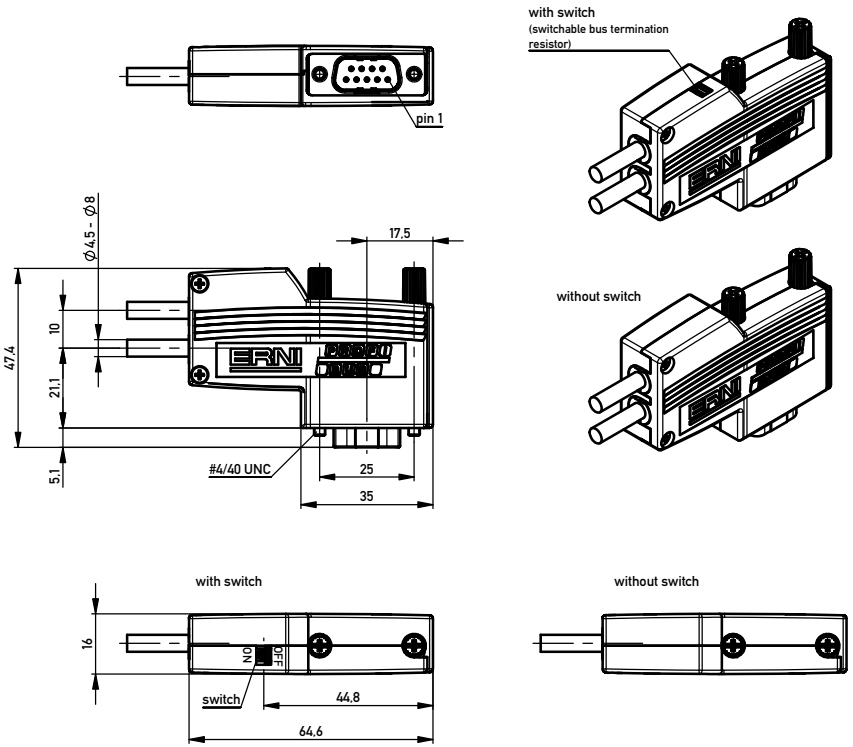


| | | | | | | |
|---|---|---|---|---|---|---|
| 134109 | Switch | without | Screw clamp 4 pin | pebble grey | A- and B Line | #4-40 UNC |
| 144176 | | | IDC terminal 2x2 pin | | | |
| 104577 | Node | | Screw clamp 4 pin | | | |
| 104322 | Termination | | Screw clamp 2 pin | yellow | | |
| Part number | Type | Programming interface (PU) | Cable termination | Colour | Signals / Power supply | Fastening screw thread |

## ERbic Profibus with PU interface, horizontal, reversed

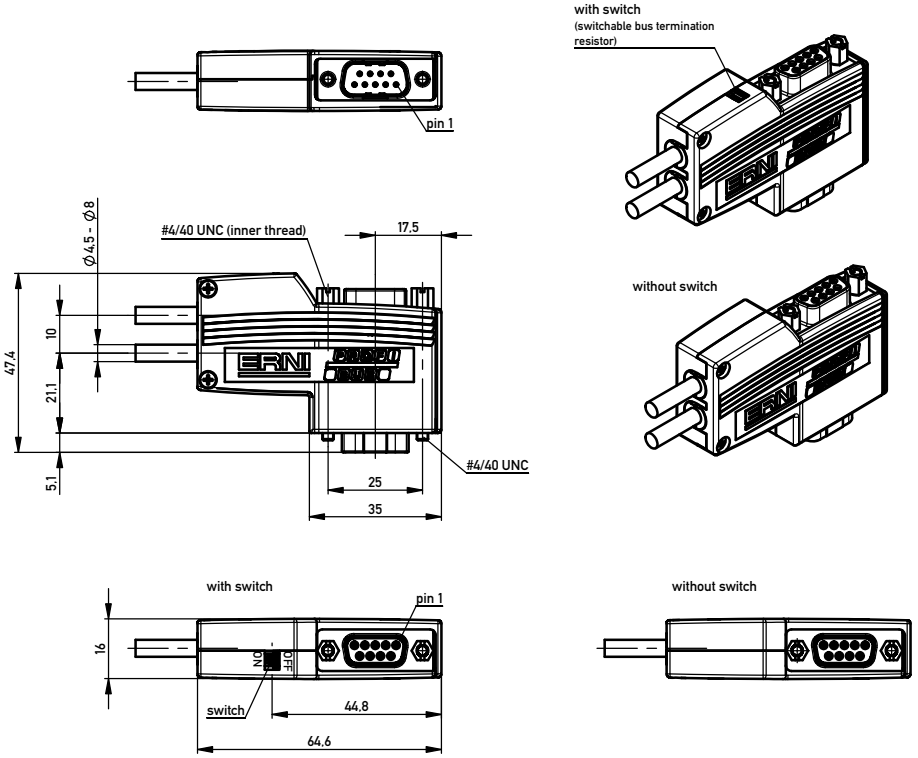


| | | | | | | |
|---|---|---|---|---|---|---|
| 154842 | Switch | with | IDC terminal 2x2 pin | pebble grey | A- and B Line | #4-40 UNC |
| Part number | Type | Programming interface (PU) | Cable termination | Colour | Signals / Power supply | Fastening screw thread |

Notes:

1. Operating temperature: -20°C / +70°C
2. Protection class: IP40
3. Sealing plate: Drawing number 103356.

| | | | |
|---|---|---|---|
| Information: | Tolerances | All Dimensions in mm | Scale 1:1 |
| | | | Angaben zu entsprechender Ident-Nr. siehe Fertigungsunterlagen. *For further information about I.D. number see manufacturing document.* |
| All rights reserved. Only for Information. To ensure that this is the latest version of this drawing, please contact one of the ERNI companies before using. | Subject to modification without prior notice. Drawing will not be updated. | | Designation: ERbic horiz.rev. Profibus *General plan* |
| | | ERNI www.ERNI.com | 324262 — I — A2 |
| Index | Date | | Class: ERBIC |

Copyright by ERNI GmbH
Proprietary notice pursuant to ISO 16016 to be observed

# Mouser Electronics

Authorized Distributor

Click to View Pricing, Inventory, Delivery & Lifecycle Information:

ERNI Electronics:

144176