CUSTOMER DRAWING

SPECIFICATIONS ARE SUBJECT TO CHANGE WITHOUT NOTICE

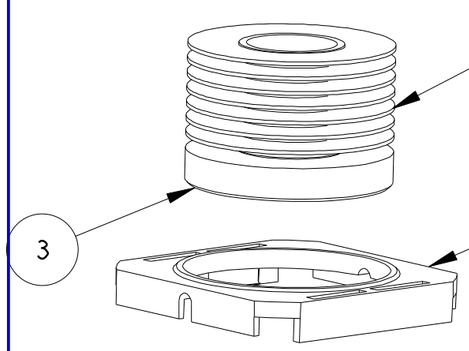

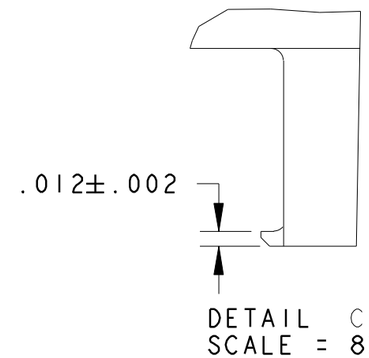

SCALE = 1X

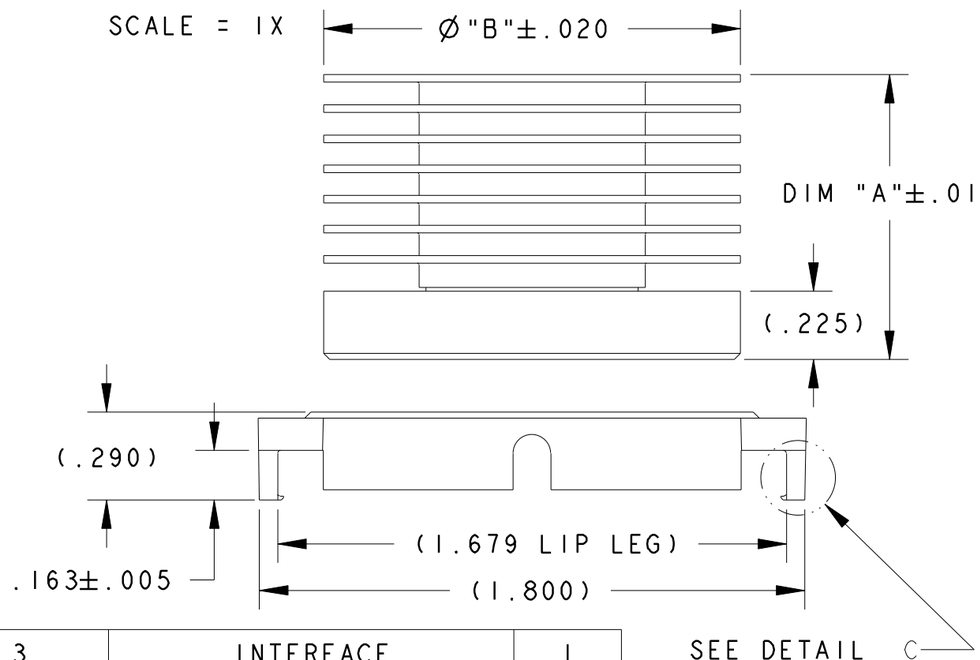

1. MATERIAL:

   HEAT SINK: ALUMINUM
   CLIP: BLACK PEI (UL94-VO)

2. BEFORE THE HEATSINK APPLICATION, THE USER SHOULD IDENTIFY THE SPECIFICATION OF MAXIMUM LOAD ON THE BGA PACKAGE.

   SCREW DRIVER SLOT (.070 WIDE X .100 DEEP)PROVIDED IN THE CENTER PORTION OF THE HEAT SINK. FOR ACCURATE TORQUE SETTING, SCREW DRIVER BIT MUST BE ALIGNED TO THE CENTER LINE OF THE HEAT SINK.

   HEATSINK TORQUE SPECIFICATIONS CONVERTED TO FORCE.
   BARE DIE PACKAGE:

   2.5 POUND-FORCE INCH TORQUE = 7.8 POUND-FORCE
   (0.28 NEWTON METER TORQUE = 34.70 NEWTON)

   3.0 POUND-FORCE INCH TORQUE = 9.4 POUND-FORCE
   (0.34 NEWTON METER TORQUE = 41.81 NEWTON)

   FULL SIZE LID PACKAGE:

   2.5 POUND-FORCE INCH TORQUE = 6.3 POUND-FORCE
   (0.28 NEWTON METER TORQUE = 28.02 NEWTON)

   3.0 POUND-FORCE INCH TORQUE = 7.6 POUND-FORCE
   (0.34 NEWTON METER TORQUE = 33.81 NEWTON)

3. REMOVE CLIP WITH REMOVAL TOOL P/N: 1542616-1

4. RoHS COMPLIANT AND CERTIFIED.

ITEM NO.	DESCRIPTION	QTY
3	INTERFACE	1
2	HEATSINK, 1 3/8" THRD.	1
1	MOUNTING CLIP	1

TABLE 1 (BOM)

200 LFM	400 LFM	600 LFM	Rca (°C/WATT) THERMAL PERFORMANCE	ASSEMBLY HS PART NO.	DESCRIPTION	Ø"B"	DIM "A"
2.95	2.01	1.58		2-1963562-7	Ø2.000" HS, 1 3/8" THRD. 7 FINS	2.000	.940
3.36	2.23	1.76		2-1963562-5	Ø2.000" HS, 1 3/8" THRD. 5 FINS	2.000	.740
3.67	2.40	1.90		2-1963562-4	Ø2.000" HS, 1 3/8" THRD. 4 FINS	2.000	.640
4.02	2.67	2.12		2-1963562-3	Ø2.000" HS, 1 3/8" THRD. 3 FINS	2.000	.540
4.35	2.98	2.34		2-1963562-2	Ø2.000" HS, 1 3/8" THRD. 2 FINS	2.000	.440
3.67	2.45	1.88		1-1963562-7	Ø1.375" HS, 1 3/8" THRD, 7 FINS	1.375	.940
4.18	2.74	2.11		1-1963562-5	Ø1.375" HS, 1 3/8" THRD, 5 FINS	1.375	.740
4.56	2.95	2.28		1-1963562-4	Ø1.375" HS, 1 3/8" THRD, 4 FINS	1.375	.640
4.98	3.30	2.56		1-1963562-3	Ø1.375" HS, 1 3/8" THRD, 3 FINS	1.375	.540
5.40	3.66	2.84		1-1963562-2	Ø1.375" HS, 1 3/8" THRD. 2 FINS	1.375	.440

TABLE 2

REV.	REVISION INFO
A	RELEASE ERN #: 112104 E.TAO 5-4-07 APP'D: V.K 5-4-07
A1	RELEASED ECR-07-012339 ETAO 5-24-07 APP'D: V.K 5-24-07
B	RELEASED ECO-07-023087 DA 10-1-07 APP'D: BP 10-18-07
B1	RELEASED ECR-07-030181 ETAO 12-14-07 APP'D: B.P 12-17-07

DO NOT SCALE

Tyco Electronics — North Attleboro, Massachusetts 02760

UNLESS OTHERWISE SPECIFIED TOLERANCES ARE:	DRAWN BY: E.TAO	DATE: 5-4-07	MATERIAL: N/A
.XX ± . .XXX ± . .XXXX ± . ANGLES ± °	ENGINEER: V. KHEIL	DATE: 5-4-07	FINISH: N/A
	FILENAME: C-1963562	PROJECT:	SYSTEM: PRO-E

CONFIDENTIAL PROPERTY OF TYCO ELECTRONICS. NOT TO BE DISCLOSED TO OTHERS, REPRODUCED OR USED FOR ANY PURPOSES EXCEPT AS AUTHORIZED IN WRITING BY AN AUTHORIZED OFFICIAL OF TYCO ELECTRONICS. MUST BE RETURNED TO TYCO ELECTRONICS ON DEMAND, ON COMPLETION OF ORDER OR OTHER PURPOSES FOR WHICH LENT.

TITLE: ASSEMBLY HEATSINK WITH 4 LEGS, 42.5mm CLIP

DIMENSIONS ARE IN: INCHES	SCALE: 2:1	TE PART NO.: SEE TABLE 2	SHEET 1 of 1
THIRD ANGLE PROJECTION	SIZE B	DWG. NO.: C-1963562	REV. B1

Mouser Electronics

Authorized Distributor

Click to View Pricing, Inventory, Delivery & Lifecycle Information:

TE Connectivity:

1-1963562-7