Dec.1.2020 Copyright 2020 HIROSE ELECTRIC CO., LTD. All Rights Reserved.
In case of consideration for using Automotive equipment / device which demand high reliability, kindly contact our sales window correspondents.

	COUNT	DESCRIPTION OF REVISIONS	BY	CHKD	DATE		COUNT	DESCRIPTION OF REVISIONS	BY	CHKD	DATE
△						△					
△						△					
△						△					

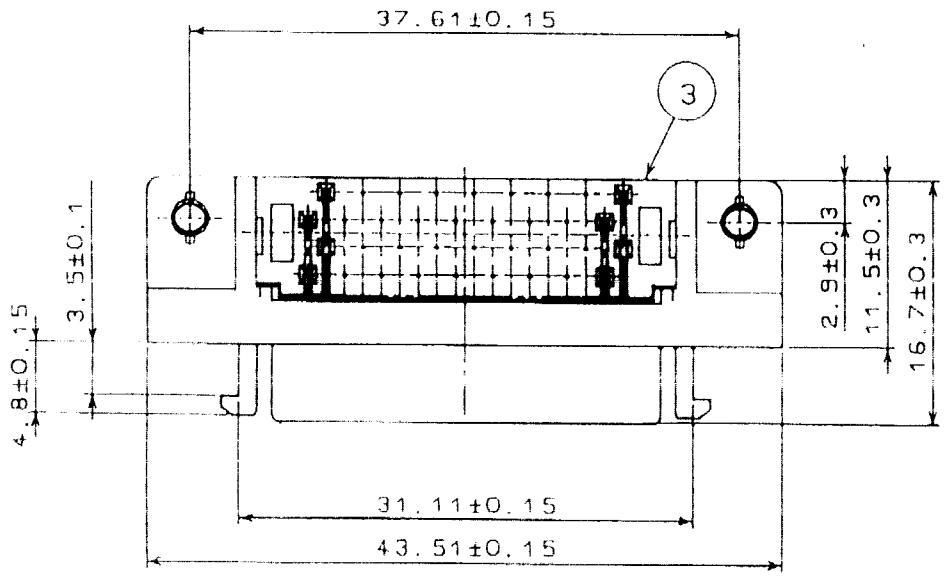

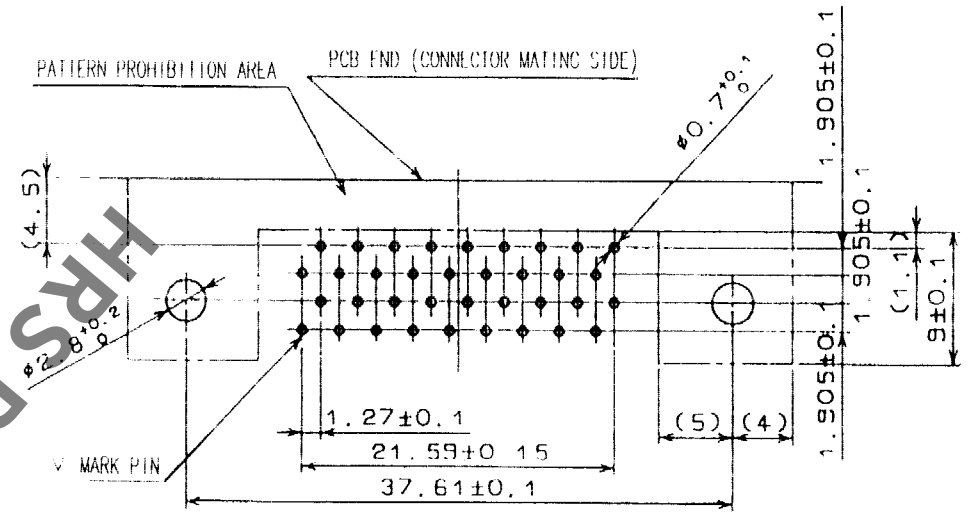

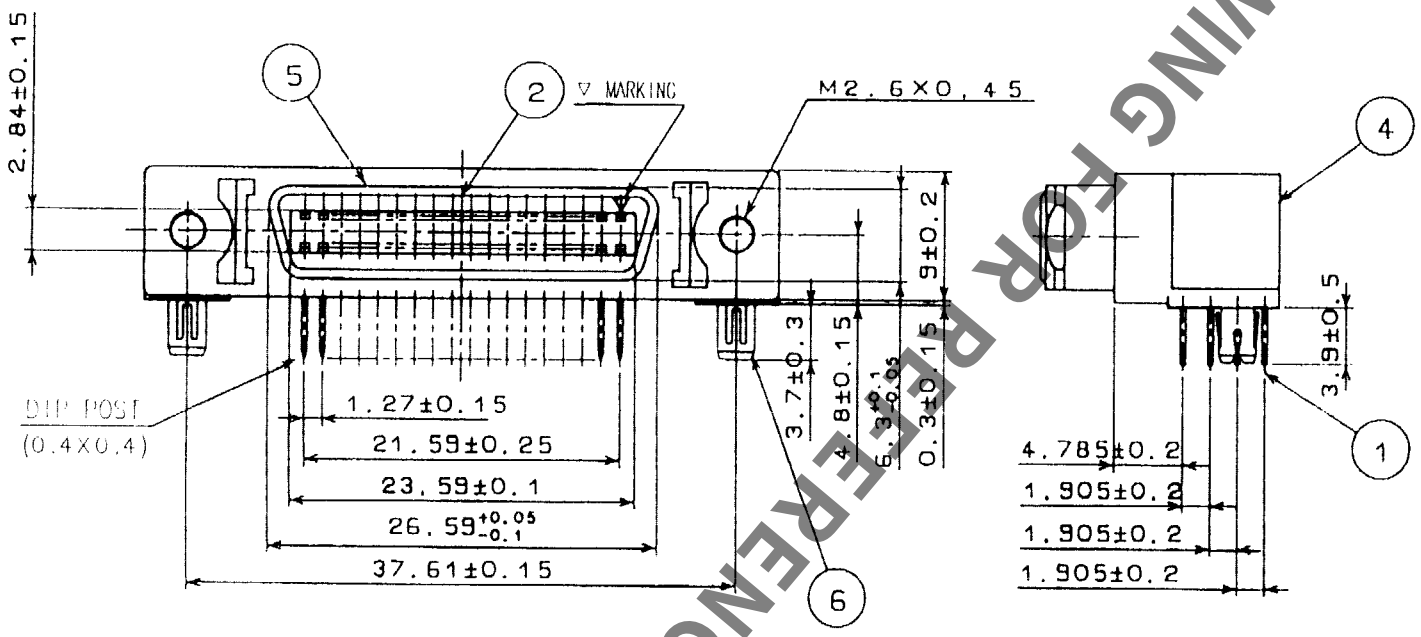

RECOMMENDED PC BOARD PATTERN
(RECOMMENDED BOARD THICKNESS 1.6 mm)

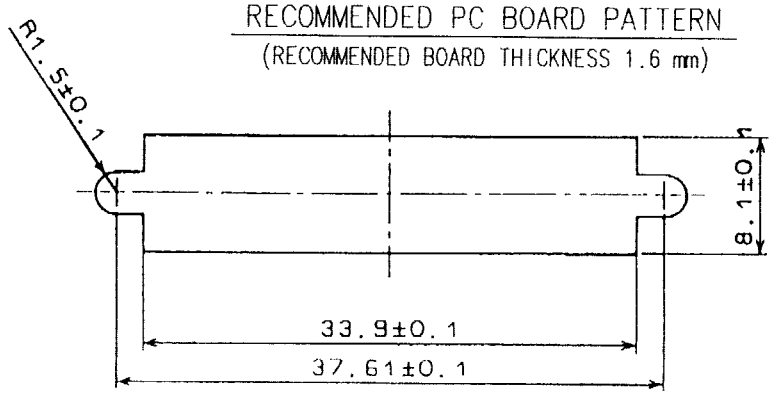

PANEL CUTOUT
(PANEL THICKNESS TO BE 1.6 mm MAX)

HRS DRAWING FOR REFERENCE

NO.	MATERIAL	FINISH, REMARKS	NO.	MATERIAL	FINISH, REMARKS
3	PBT	UL94V-0(BLACK)	6	PHOSPHOR BRONZE	TIN PLATING
2	PBT	UL94V-0(BLACK)	5	STEEL	NICKEL PLATING
1	PHOSPHOR BRONZE	SELECTIVE GOLD PLATING 0.3μm	4	ZINC ALLOY DIE CASTING	NICKEL PLATING

CODE NO.(OLD)	DRAWN	DESIGNED	CHECKED	APPROVED	RELEASED
CL	O. Hanagata 03.10.15	O. Hanagata 03.10.15	Y. Enami 03.10.16	H. Miwa 03.10.16	. .

SCALE 2 : 1	DRAWING NO. EDC3-042067-01	PART NO. DX10M-36SE(50)
UNITS mm	HRS HIROSE ELECTRIC CO., LTD	CODE NO. CL230-5069-2-50
		1/1

TO
Q

FORM NO.229