THIS DRAWING IS UNPUBLISHED. RELEASED FOR PUBLICATION 20
© COPYRIGHT 20 BY TYCO ELECTRONICS CORPORATION. ALL RIGHTS RESERVED.

PART NUMBER	REV	FIRST USED	POWER UNIT	FEED TYPE	DESCRIPTION
1855137-1	A	122500-1	LEADMAKER	AIR FEED	CUTS CARRIER
1855137-2	A	565435-5	BENCH MODEL K	AIR FEED	CUTS CARRIER
1855137-3	A	354500-1	BENCH MODEL G	AIR FEED	CUTS CARRIER
1855137-6	A	122500-1	LEADMAKER	AIR FEED	CONTINUOUS CARRIER
7-1855137-7	A	-	-	-	SPARE PARTS

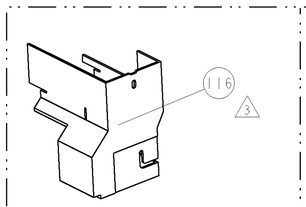

AMP-O-LECTRIC TERM GUARD

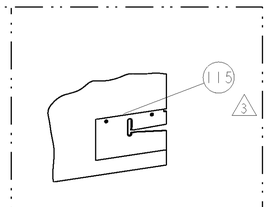

G TERMINATOR GUARD

TERMINAL NAME: TAXI TERM F M/P 280

AMP	PACKARD
286711	12110647
-	-
-	-
-	-
-	-
-	-
-	-
-	-
-	-
-	-

PACKARD TERMINAL - AMP CRIMP SPECS

CRIMP HEIGHT	WIRE SIZE	REF SETTING
.098±.002[2.49±0.05mm]	10AWG	D0
-	-	-
-	-	-
-	-	-

CRIMP	SIZE	TYPE	RANGE
WIRE	.150 [3.81mm]	F	10 AWG
INSUL	.220 [5.59mm]	F	Ø.146-.176

WIRE STRIP LENGTH	TERM APPL SPEC	FEED	APPLICATOR INSTRUCTIONS	SET UP GAGE
.219 -.250	NONE	.640	408-8040	458637-1

LOC	DIST
A	66

REVISIONS

P	LTR	DESCRIPTION	DATE	DWN	APVD
	A	RELEASED	04DEC2006	RK	GB
	A1	ECR-09-005818	12MAR2009	MY	TE

1. RECOMMENDED SPARE PARTS
2. GREASE LIGHTLY
3. GUARD MUST BE IN PLACE WHEN OPERATING APPLICATOR IN A BENCH MACHINE

* WARNING
ON INSTALLATION, SET WIRE DISC TO LARGEST WIRE SIZE SETTING. USE OF SETTINGS BELOW MIN. REQUIRED CRIMP HEIGHT SETTING WILL CAUSE DAMAGE TO CRIMP TOOLING.

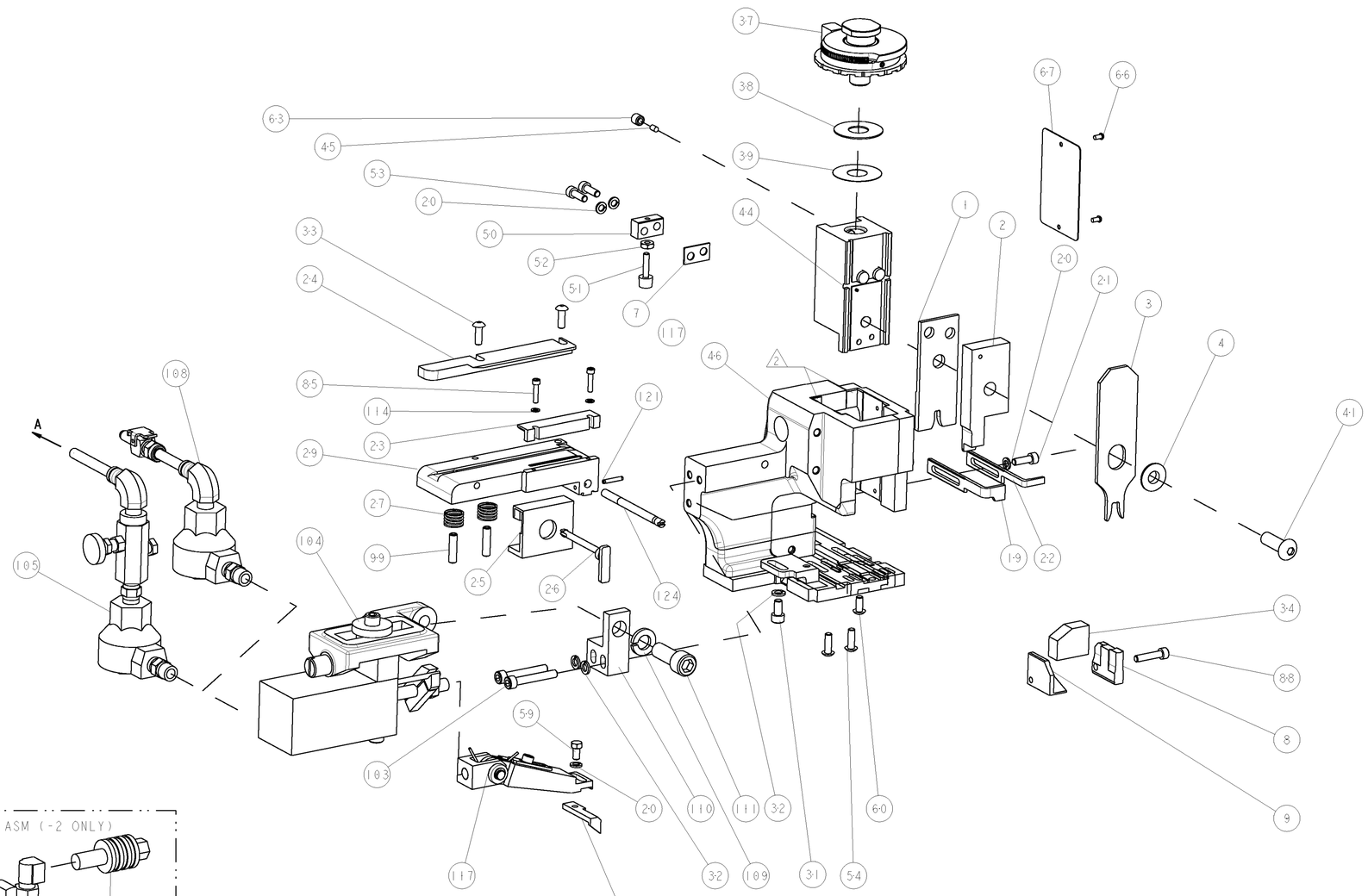

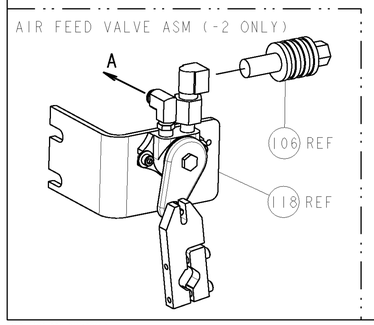

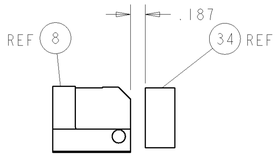

TERMINAL SUPPORT LOCATION

						PART NO	DESCRIPTION	ITEM NO
	-	1	1	1	1	-	690432-3	ADJUSTMENT SCREW	124
	-	1	1	1	1	-	3-21028-7	PIN, SLOTTED SPRING .094 X .562	121
	-	-	-	REF	-	-	692655-6	AIR FEED VALVE ASSEMBLY	118
	-	1	1	1	1	-	461062-1	FEED FINGER ASSEMBLY	117
3	-	-	-	REF	-	..	455749-1	GUARD WINDOW	116
3	-	-	REF	-	-	..	679532-1	INSERT, GUARD	115
	-	2	2	2	2	-	21024-2	WASHER, SPRG LOCK, REG NO 4	114
	-	1	1	1	1	-	3-21001-5	SCR, SKT HD CAP 3/8-16 X 1.000	111
	-	1	1	1	1	-	459610-1	MOUNT, FEED BRACKET	110
	-	1	1	1	1	-	21024-8	WASHER, SPRG LOCK, REG 3/8	109
	-	1	1	-	1	-	692655-7	AIR FEED VALVE ASSEMBLY	108
	-	-	-	REF	-	-	24024-2	VALVE, SHUT OFF	106
	-	-	-	1	-	-	692655-5	AIR FEED VALVE ASSEMBLY	105
	-	1	1	1	1	-	461065-1	ASSEMBLY, AIR FEED	104
	-	2	2	2	2	-	4-21000-0	SCR, SKT HD CAP 10-32 X 1.250	103
	-	2	2	2	2	-	5-21006-6	SCR, SET, CUP POINT 10-32 X .750	99
	-	1	1	1	1	-	2-21000-9	SCR, SKT HD CAP 8-32 X .750	88
	-	2	2	2	2	-	1-21000-5	SCR, SKT HD CAP 4-40 X .500	85
	-	1	1	1	1	-	4088040	SF APPL INST 408-8040	72
	-	1	1	1	1	-	217238-1	GENERAL INSTRUCTION PKG	71
	-	1	1	1	1	-	461264-5	PLATE, IDENTIFICATION	67
	-	2	2	2	2	-	21017-2	SCREW, DRIVE	66
	-	1	1	1	1	-	21009-2	SCR, SET, SELF LOCKING 1/4-20 X .250	63
	-	1	1	1	1	-	22733-8	SCR, BHSC, SELF-LOCKING, 8-32 X .375	60
	-	1	1	1	1	-	2-22603-0	SCR, HEX HD CAP 8-32 X .312	59
	-	1	1	1	1	-	3-694433-2	FEED PAWL	56
	-	2	2	2	2	-	2-21002-2	SCR, BTN SKT HD CAP 8-32 X .500	54
	-	2	2	2	2	-	2-21000-7	SCR, SKT HD CAP 8-32 X .500	53
	-	1	1	1	1	-	21018-5	NUT, HEX, REG 6-32	52
	-	1	1	1	1	-	811242-2	BUMPER, HOLD DOWN	51
	-	1	1	1	1	-	690753-1	SPACER, TONKER	50
	-	1	1	1	1	-	1633399-1	APPL., BASIC AIR FEED SUB ASSY	46
	-	1	1	1	1	-	690191-1	PLUG,NYLON	45
	-	1	1	1	1	-	2-819307-1	RAM, SIDE FEED	44
	-	1	1	1	1	-	7-21002-9	SCR, BTN SKT HD CAP 5/16-24 X 1.00	41
	-	1	1	1	1	-	690125-1	SHIM SUB-ASSY	39
	-	1	1	1	1	-	469367-8	SHIM	38
	-	1	1	1	1	-	879103-2	FINE ADJUST HEAD ASSEMBLY	37
	-	1	1	1	1	-	690786-1	TERMINAL SUPPORT	34
	-	2	2	2	2	-	2-21002-2	SCR, BTN SKT HD CAP 8-32 X .500	33
	-	3	3	3	3	-	21024-5	WASHER, SPRG LOCK, REG NO 10	32
	-	1	1	1	1	-	3-21000-4	SCR, SKT HD CAP 10-32 X .375	31
	-	1	1	1	1	-	5-455671-2	PLATE,STRIP GUIDE	29
	-	2	2	2	2	-	1-22284-0	SPRING, COMPRESSION	27
	-	1	1	1	1	-	690546-1	LEVER, DRAG RELEASE	26
	-	1	1	1	1	-	690754-7	DRAG, SPECIAL	25
	-	1	1	1	1	-	1-690440-9	GUIDE, REAR STRIP	24
	-	1	1	1	1	-	1-690712-1	FRONT STRIP GUIDE	23
	-	1	-	-	1	-	690472-2	STRIPPER	22
	-	1	1	1	1	-	2-21000-7	SCR, SKT HD CAP 8-32 X .500	21
	-	4	4	4	4	-	21024-4	WASHER, SPRG LOCK, REG NO 8	20
	-	-	1	1	-	-	691353-1	STRIPPER	19
	-	1	1	1	1	-	853714-5	PLATE, REAR SHEAR	9
1	1	1	1	1	1	-	1214596-2	ANVIL, SPECIAL COMBINATION	8
	-	1	1	1	1	-	1-240641-9	SPACER	7
	-	1	1	1	1	-	238009-4	BLOCK, FL CRIMPER SPACER	4
1	1	1	1	1	1	-	2-1633471-9	CRIMPER, INSULATION F	3
1	-	1	1	1	1	-	853720-5	BLADE, SLUG	2
1	1	1	1	1	1	-	6-458141-7	CRIMPER, WIRE PREMIUM	1
	-77	-6	-3	-2	-1	U/M			

THIS DRAWING IS A CONTROLLED DOCUMENT FOR TYCO ELECTRONICS CORPORATION. IT IS SUBJECT TO CHANGE WITHOUT NOTICE. HOLDERS OF THIS DRAWING SHOULD BE CONTACTED FOR THE LATEST REVISION.

DWN R KNEPPER 11OCT2006
CHK G BAILEY 04DEC2006
APVD T BENCHOFF 11OCT2006

tyco Electronics — Tyco Electronics, Harrisburg, PA 17105-3608

NAME: FINE ADJUST SIDE FEED HDM APPLICATOR

DIMENSIONS: INCHES
TOLERANCES UNLESS OTHERWISE SPECIFIED: 0 PLC ±-; 1 PLC ±0.1; 2 PLC ±0.01; 3 PLC ±0.001; 4 PLC ±0.0001; ANGLES ±-
MATERIAL - -
FINISH - -
PRODUCT SPEC -
APPLICATION SPEC -
WEIGHT -
SIZE A1 | CAGE CODE 00779 | DRAWING NO C-1855137 | RESTRICTED TO -
CUSTOMER DRAWING | SCALE 3:5 | SHEET 1 OF 1 | REV A1

CUSTOMER VIEWABLE ASSEMBLY

Mouser Electronics

Authorized Distributor

Click to View Pricing, Inventory, Delivery & Lifecycle Information:

TE Connectivity:

1855137-2