38690

| NO. OF CIRCUITS | DIM. "A" mm | DIM. "A" in | DIM. "B" mm | DIM. "B" in | ASSEMBLY MATERIAL NO. (STANDARD) | ASSEMBLY MATERIAL NO. (-50 OPT) |
|---|---|---|---|---|---|---|
| 02 | 17.9 | .71 | 8.3 | .33 | 386906602 | 386907802 |
| 03 | 26.2 | 1.03 | 16.5 | .65 | 386906603 | 386907803 |
| 04 | 34.4 | 1.36 | 24.8 | .98 | 386906604 | 386907804 |
| 05 | 42.7 | 1.68 | 33.0 | 1.30 | 386906605 | 386907805 |
| 06 | 50.9 | 2.01 | 41.3 | 1.63 | 386906606 | 386907806 |
| 07 | 59.2 | 2.33 | 49.5 | 1.95 | 386906607 | 386907807 |
| 08 | 67.4 | 2.66 | 57.8 | 2.28 | 386906608 | 386907808 |
| 09 | 75.7 | 2.98 | 66.0 | 2.60 | 386906609 | 386907809 |
| 10 | 83.9 | 3.31 | 74.3 | 2.93 | 386906610 | 386907810 |
| 11 | 92.2 | 3.63 | 82.6 | 3.25 | 386906611 | 386907811 |
| 12 | 100.5 | 3.96 | 90.8 | 3.58 | 386906612 | 386907812 |
| 13 | 108.7 | 4.28 | 99.1 | 3.90 | 386906613 | 386907813 |
| 14 | 117.0 | 4.61 | 107.3 | 4.23 | 386906614 | 386907814 |
| 15 | 125.2 | 4.93 | 115.6 | 4.55 | 386906615 | 386907815 |
| 16 | 133.5 | 5.26 | 123.8 | 4.88 | 386906616 | 386907816 |
| 17 | 141.7 | 5.58 | 132.1 | 5.20 | 386906617 | 386907817 |
| 18 | 150.0 | 5.91 | 140.3 | 5.53 | 386906618 | 386907818 |
| 19 | 158.2 | 6.23 | 148.6 | 5.85 | 386906619 | 386907819 |
| 20 | 166.5 | 6.56 | 156.8 | 6.18 | 386906620 | 386907820 |
| 21 | 174.8 | 6.88 | 165.1 | 6.50 | 386906621 | 386907821 |
| 22 | 183.0 | 7.21 | 173.4 | 6.83 | 386906622 | 386907822 |
| 23 | 191.3 | 7.53 | 181.6 | 7.15 | 386906623 | 386907823 |
| 24 | 199.5 | 7.86 | 189.9 | 7.48 | 386906624 | 386907824 |
| 25 | 207.8 | 8.18 | 198.1 | 7.80 | 386906625 | 386907825 |
| 26 | 216.0 | 8.51 | 206.4 | 8.13 | 386906626 | 386907826 |
| 27 | 224.3 | 8.83 | 214.6 | 8.45 | 386906627 | 386907827 |
| 28 | 232.5 | 9.16 | 222.9 | 8.78 | 386906628 | 386907828 |
| 29 | 240.8 | 9.48 | 231.1 | 9.10 | 386906629 | 386907829 |
| 30 | 249.0 | 9.81 | 239.4 | 9.43 | 386906630 | 386907830 |
| 31 | 257.3 | 10.13 | 247.7 | 9.75 | 386906631 | 386907831 |
| 32 | 265.6 | 10.46 | 255.9 | 10.08 | 386906632 | 386907832 |

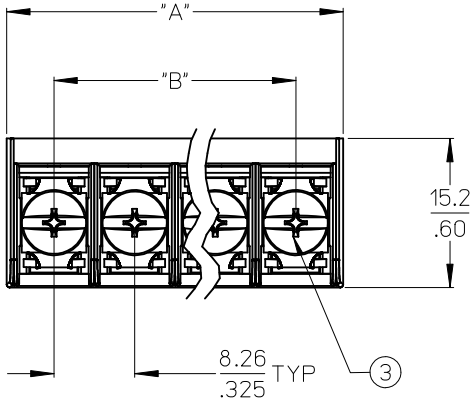


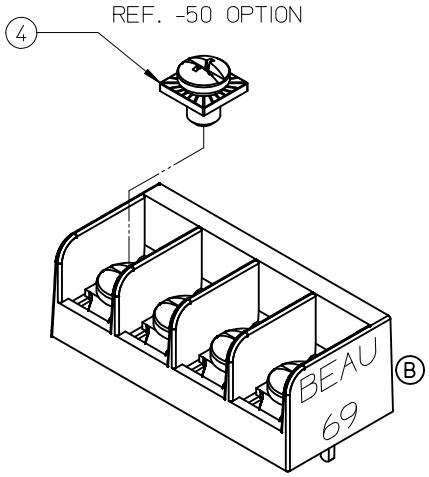


4 CIRCUITS ASSY'
SHOWN AS REFERENCE

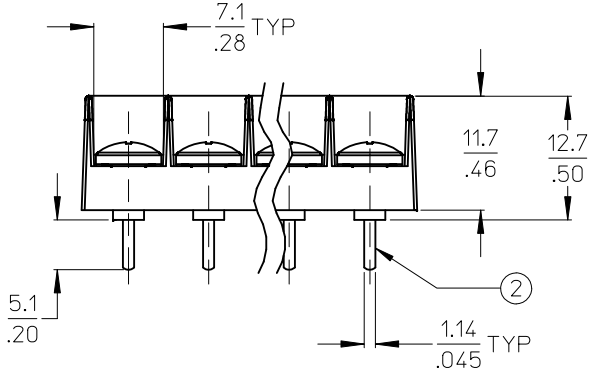


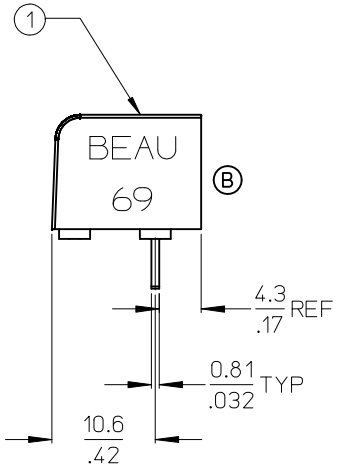


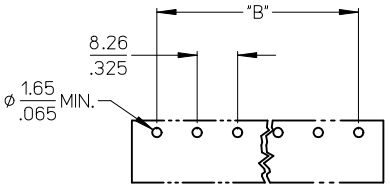


PTH PATTERN
SCALE 1:1

NOTES:
1. MATERIAL: SEE TABLE
2. FINISHES: SEE TABLE.
3. "XX" REFERS TO THE QUANTITY OF CIRCUITS.
4. ROHS COMPLIANT.

| ITEM | QTY. | DESCRIPTION | MATERIAL | FINISH |
|---|---|---|---|---|
| 4 | XX | SCREW #6-32X.155 PAN PHSLZN/BR/STEEL -50 OPT | STEEL | ZN, CLEAR CHROMATE |
| 3 | XX | SCREW #6-32X.160 PAN PHSLNI/BRASS (STANDARD) | BRASS | NICKEL PLATE |
| 2 | XX | TERMINAL, PC | BRASS | TIN PLATE |
| 1 | 1 | INSULATOR | POLYESTER (PBT) | BLACK |

REMOVE "USA"
EC NO: IPG2012-0967
DRWN:JENCINAS 2012/05/22
CH'KD:JMACNEIL 2012/05/31
APPR:JMACNEIL 2012/06/01
DESCRIPTION
REV B

QUALITY SYMBOLS
▼=0
Ⓒ=0

GENERAL TOLERANCES (UNLESS SPECIFIED)

| | mm | INCH |
|---|---|---|
| 4 PLACES | ± --- | ± --- |
| 3 PLACES | ± --- | ± .005 |
| 2 PLACES | ± 0.13 | ± .01 |
| 1 PLACE | ± 0.3 | ± --- |
| ANGULAR ± 2 ° | | |

DRAFT WHERE APPLICABLE MUST REMAIN WITHIN DIMENSIONS

DIMENSION STYLE: MM/IN
SCALE: 2:1
DESIGN UNITS: INCH
THIRD ANGLE PROJECTION

DRAWN BY: AHIDALGO DATE: 2007/04/02
CHECKED BY: JENCINAS DATE: 2007/04/02
APPROVED BY: JMACNEIL DATE: 2012/06/01

TITLE: 8.26/.325 SR TRI-BARRIER TERMINAL STRIP CS, PC ASSY

molex MOLEX INCORPORATED

MATERIAL NO.: SEE CHART
DOCUMENT NO.: SD-38690-001
SHEET NO.: 1 OF 1
SIZE: B

THIS DRAWING CONTAINS INFORMATION THAT IS PROPRIETARY TO MOLEX INCORPORATED AND SHOULD NOT BE USED WITHOUT WRITTEN PERMISSION

# Mouser Electronics

Authorized Distributor

Click to View Pricing, Inventory, Delivery & Lifecycle Information:

Molex:
38690-6608