THIS DRAWING IS UNPUBLISHED. RELEASED FOR PUBLICATION - ,- .
© COPYRIGHT - By - ALL RIGHTS RESERVED.

LOC	DIST
AD	00

REVISIONS

P	LTR	DESCRIPTION	DATE	DWN	APVD
	01	REVISED PER ECR-12-003106	14FEB12	W.W	C.W

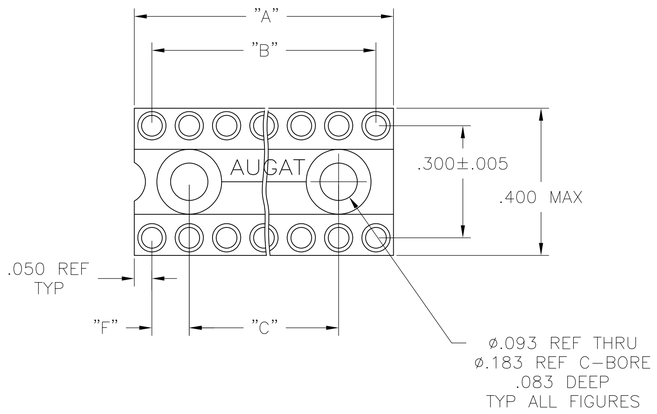

FIG. 1

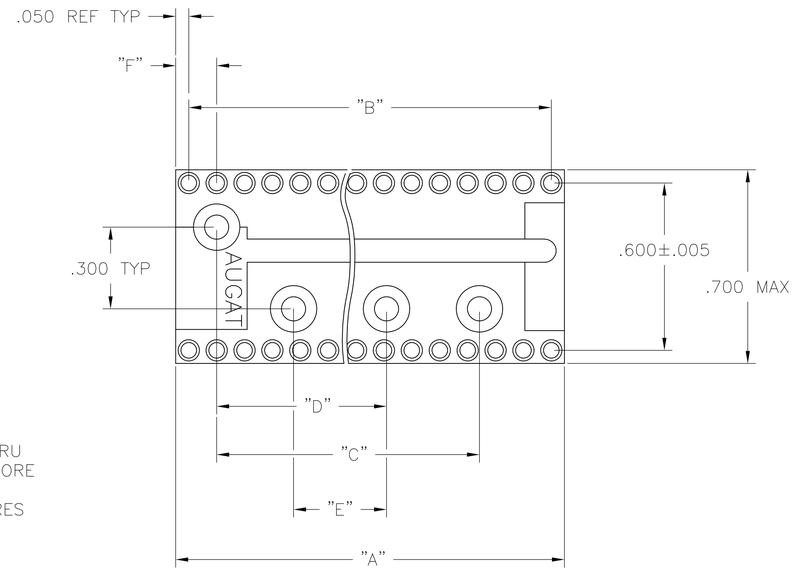

FIG. 2

1. INSULATOR MATERIAL – THERMOPLASTIC POLYESTER, PCT, BLACK, UL94 V-0.
2. CONTACT – 4 BEAM, BECU, MACHINED (PREMIUM) OR STAMPED (ECONOMY, W/SUFFIX -ES OR -ESL)
3. SLEEVE – MACHINED COPPER ALLOY.
4. PLATING: CONTACT -20 µIN MIN. GOLD OVER 30 µIN MIN NICKEL
   SLEEVE -7.5 µIN MIN. GOLD OVER 50 µIN MIN NICKEL
5. PLATING: CONTACT -20 µIN MIN. GOLD OVER 30 µIN MIN NICKEL
   SLEEVE -80 µIN MIN. TIN-LEAD OVER 50 µIN MIN COPPER
6. PLATING: CONTACT -20 µIN MIN. GOLD OVER 30 µIN MIN NICKEL
   SLEEVE -180 µIN MIN. TIN-LEAD OVER 50 µIN MIN COPPER
7. PLATING: CONTACT -80 µIN MIN. TIN-LEAD OVER 75 µIN MIN COPPER
   SLEEVE -80 µIN MIN. TIN-LEAD OVER 50 µIN MIN COPPER
8. PLATING: CONTACT -80 µIN MIN. TIN-LEAD OVER 75 µIN MIN COPPER
   SLEEVE -180 µIN MIN. TIN-LEAD OVER 50 µIN MIN COPPER
9. PLATING: CONTACT - 5 µIN MIN. GOLD OVER 50 µIN MIN NICKEL
   SLEEVE -7.5 µIN MIN. GOLD OVER 50 µIN MIN NICKEL
10. PLATING: CONTACT -5 µIN MIN. GOLD OVER 50 µIN MIN NICKEL
    SLEEVE -80 µIN MIN. TIN-LEAD OVER 50 µIN MIN COPPER
11. PLATING: CONTACT - 5 µIN MIN. GOLD OVER 50 µIN MIN NICKEL
    SLEEVE -180 µIN MIN. TIN-LEAD OVER 50 µIN MIN COPPER

ELECTRICAL:
CONTACT RESISTANCE: 10 MILLIOHMS MAX
CONTACT RATING: 3 AMPS
CAPACITANCE: 1.0 pF PER MIL-STD-202, METHOD 305
INSULATION RESISTANCE: 5000 MOHMS MIN @ 500 VDC PER EIA-364-21
DIELECTRIC WITHSTANDING VOLTAGE: 1000 VOLTS (RMS) PER EIA-364-20

MECHANICAL:
AFTER INSERTION FORCE:
134 GRAMS AVG (4 BEAM PREMIUM) 179 GRAMS AVG (4 BEAM ECONOMY)
AFTER WITHDRAWAL FORCE:
63 GRAMS AVG (4 BEAM PREMIUM OR ECONOMY)

ENVIRONMENTAL:
OPERATING TEMPERATURE: -55°C TO -105°C

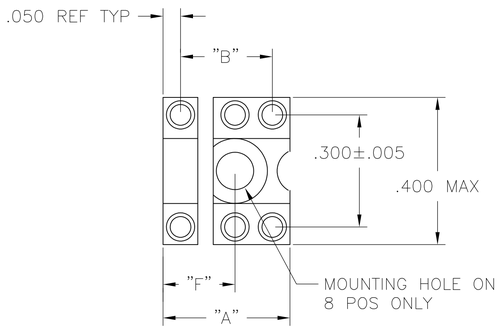

FIG. 3

6 POS MOUNTING HOLE OMITTED

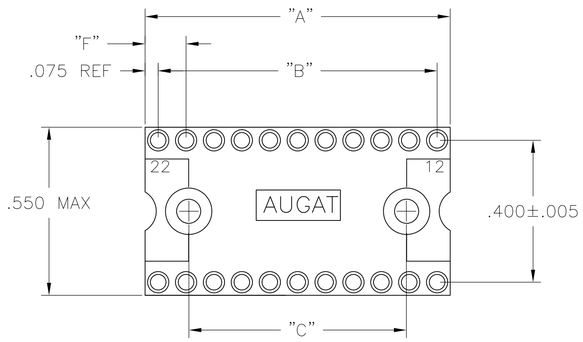

FIG. 4

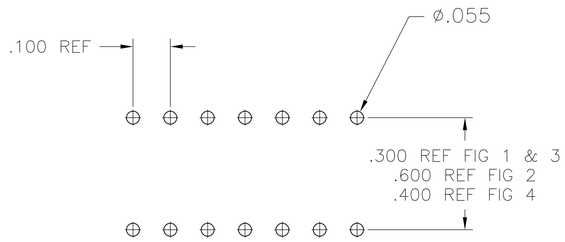

P.C.B. HOLE LAYOUT

TOLERANCE ±.003

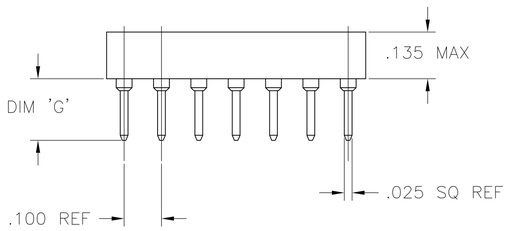

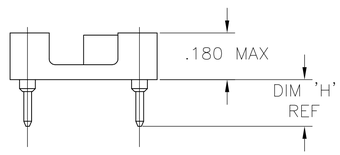

SEE SHEETS 2 & 3 FOR PART NUMBER TABLES

THIS DRAWING IS A CONTROLLED DOCUMENT.

DIMENSIONS: INCHES

TOLERANCES UNLESS OTHERWISE SPECIFIED:
0 PLC ± -
1 PLC ± -
2 PLC ± -
3 PLC ± .005
4 PLC ± -
ANGLES ± -

MATERIAL -
FINISH -

DWN BSV
CHK K.WRIGHT
APVD K.WRIGHT
PRODUCT SPEC —
APPLICATION SPEC —
WEIGHT —

TE Connectivity

NAME
CLOSED FRAME DIP, PREMIUM LEAD FREE
(REF AUGAT 500 SERIES)
PREMIUM (MACHINED CONTACT)

SIZE	CAGE CODE	DRAWING NO	RESTRICTED TO
A1	00779	C-1437532	—

CUSTOMER DRAWING | SCALE 4:1 | SHEET 1 OF 3 | REV 01

4805 (3/11)

THIS DRAWING IS UNPUBLISHED. RELEASED FOR PUBLICATION -.- .
© COPYRIGHT - By - ALL RIGHTS RESERVED.

LOC	DIST
AD	00

REVISIONS

P	LTR	DESCRIPTION	DATE	DWN	APVD
	-	SEE SHEET 1	-	-	-

	FINISH	FIG	H	G	F	E	D	C	B	"A" MAX	NO. OF POSN	PART NO.
	7	2	.510	.595/.565	.150	.500	.900	1.500	1.900	2.000	40	6-1437534-9
	6	2	.370	.455/.425	.150	.500	.900	1.500	1.900	2.000	40	7-1437534-0
	5	2	.510	.595/.565	.150	.500	.900	1.500	1.900	2.000	40	8-1437532-2
	4	2	.370	.455/.425	.150	.500	.900	1.500	1.900	2.000	40	7-1437532-9
	4	2	.510	.595/.565	.150	.500	.900	1.500	1.900	2.000	40	7-1437532-8
OBSOLETE	7	2	.510	.595/.565	.150	.500	.900	1.500	1.700	1.800	36	7-1437532-3
SUPERCEDED BY 7-1437532-0	5	2	.510	.595/.565	.150	.500	.900	1.500	1.700	1.800	36	7-1437833-0
	4	2	.510	.595/.565	.150	.500	.900	1.500	1.700	1.800	36	7-1437532-0
	6	2	.370	.455/.425	.150	-	.400	.900	1.500	1.600	32	6-1437532-4
	5	2	.510	.595/.565	.150	-	.400	.900	1.500	1.600	32	6-1437532-3
SUPERCEDED BY 5-1437532-9	4	2	.370	.455/.425	.150	-	.400	.900	1.500	1.600	32	6-1447289-3
	4	2	.510	.595/.565	.150	-	.400	.900	1.500	1.600	32	5-1437532-9
OBSOLETE	7	2	.510	.595/.565	.150	-	.400	.900	1.300	1.400	28	5-1437534-3
	6	2	.370	.455/.425	.150	-	.400	.900	1.300	1.400	28	4-1437532-0
	5	2	.510	.595/.565	.150	-	.400	.900	1.300	1.400	28	3-1437532-9
	4	2	.510	.595/.565	.150	-	.400	.900	1.300	1.400	28	3-1437532-4
	5	4	.510	.595/.565	.150	-	-	.900	1.100	1.200	24	2-1437532-6
	4	4	.510	.595/.565	.150	-	-	.900	1.100	1.200	24	2-1437532-4
	7	2	.510	.595/.565	.150	-	.400	.900	1.100	1.200	24	1-1437532-8
	6	2	.370	.455/.425	.150	-	.400	.900	1.100	1.200	24	1-1437532-6
	5	2	.510	.595/.565	.150	-	.400	.900	1.100	1.200	24	1-1437532-5
	4	2	.370	.455/.425	.150	-	.400	.900	1.100	1.200	24	1-1437532-2
	4	2	.510	.595/.565	.150	-	.400	.900	1.100	1.200	24	1-1437532-1
	7	1	.510	.595/.565	.175	-	-	.800	1.000	1.150	22	1437532-4
	5	1	.510	.595/.565	.175	-	-	.800	1.000	1.150	22	4-1437534-9
	4	1	.510	.595/.565	.175	-	-	.800	1.000	1.150	22	1437532-1
SUPERCEDED BY 8-1437531-7	8	1	.370	.455/.425	.250	-	-	.500	.900	1.000	20	8-1437531-8
	7	1	.510	.595/.565	.250	-	-	.500	.900	1.000	20	8-1437531-7
	6	1	.370	.455/.425	.250	-	-	.500	.900	1.000	20	8-1437531-5
	5	1	.510	.595/.565	.250	-	-	.500	.900	1.000	20	8-1437531-4
	4	1	.370	.455/.425	.250	-	-	.500	.900	1.000	20	8-1437531-1
	4	1	.510	.595/.565	.250	-	-	.500	.900	1.000	20	8-1437531-0
	6	1	.370	.455/.425	.150	-	-	.600	.800	.900	18	7-1437531-2
	5	1	.510	.595/.565	.150	-	-	.600	.800	.900	18	7-1437531-1
	4	1	.510	.595/.565	.150	-	-	.600	.800	.900	18	6-1437531-6
SUPERCEDED BY 4-1437531-9	8	1	.370	.455/.425	.150	-	-	.500	.700	.800	16	5-1437531-0
	7	1	.510	.595/.565	.150	-	-	.500	.700	.800	16	4-1437531-9
	6	1	.370	.455/.425	.150	-	-	.500	.700	.800	16	4-1437531-6
	5	1	.510	.595/.565	.150	-	-	.500	.700	.800	16	4-1437531-5
	4	1	.370	.455/.425	.150	-	-	.500	.700	.800	16	4-1437531-2
	4	1	.510	.595/.565	.150	-	-	.500	.700	.800	16	4-1437531-1
SUPERCEDED BY 2-1437531-5	8	1	.370	.455/.425	.150	-	-	.400	.600	.700	14	2-1437531-6
	7	1	.510	.595/.565	.150	-	-	.400	.600	.700	14	2-1437531-5
	6	1	.370	.455/.425	.150	-	-	.400	.600	.700	14	2-1437531-3
	5	1	.510	.595/.565	.150	-	-	.400	.600	.700	14	2-1437531-2
	4	1	.370	.455/.425	.150	-	-	.400	.600	.700	14	1-1437531-9
	4	1	.510	.595/.565	.150	-	-	.400	.600	.700	14	1-1437531-8
	7	3	.510	.595/.565	.200	-	-	-	.300	.400	8	8-1437529-4
	6	3	.370	.455/.425	.200	-	-	-	.300	.400	8	8-1437529-2
	5	3	.510	.595/.565	.200	-	-	-	.300	.400	8	8-1437529-1
	4	3	.370	.455/.425	.200	-	-	-	.300	.400	8	7-1437529-7
	4	3	.510	.595/.565	.200	-	-	-	.300	.400	8	7-1437529-6
	6	3	.370	.455/.425	-	-	-	-	.200	.300	6	7-1437529-0
	5	3	.510	.595/.565	-	-	-	-	.200	.300	6	6-1437529-9
	4	3	.510	.595/.565	-	-	-	-	.200	.300	6	6-1437529-6

PREMIUM VERSION PART NUMBERS

SEE SHEET 3 FOR
ECONOMY VERSION PART NUMBERS

THIS DRAWING IS A CONTROLLED DOCUMENT.

DIMENSIONS: INCHES

TOLERANCES UNLESS OTHERWISE SPECIFIED:
0 PLC ± -
1 PLC ± -
2 PLC ± -
3 PLC ± .005
4 PLC ± -
ANGLES ± -

MATERIAL -
FINISH -

DWN BSV -
CHK K.WRIGHT -
APVD K.WRIGHT -
PRODUCT SPEC —
APPLICATION SPEC —
WEIGHT —

TE Connectivity

NAME
CLOSED FRAME DIP, PREMIUM LEAD FREE
(REF AUGAT 500 SERIES)
PREMIUM (MACHINED CONTACT)

SIZE	CAGE CODE	DRAWING NO	RESTRICTED TO
A1	00779	C-1437532	—

CUSTOMER DRAWING | SCALE 4:1 | SHEET 2 OF 3 | REV 01

THIS DRAWING IS UNPUBLISHED. RELEASED FOR PUBLICATION -,- .
© COPYRIGHT - By - ALL RIGHTS RESERVED.

LOC	DIST
AD	00

REVISIONS

P	LTR	DESCRIPTION	DATE	DWN	APVD
	-	SEE SHEET 1	-	-	-

	FINISH	FIG	H	G	F	E	D	C	B	"A" MAX	NO. OF POSN	PART NO.
SUPERCEDED BY 8-1437532-2	10	2	.510	.595/.565	.150	.500	.900	1.500	1.900	2.000	40	7-1437536-8
SUPERCEDED BY 8-1437532-2	5	2	.510	.595/.565	.150	.500	.900	1.500	1.900	2.000	40	7-1437536-7
SUPERCEDED BY 6-1437532-3	10	2	.510	.595/.565	.150	-	.400	.900	1.500	1.600	32	6-1437536-7
SUPERCEDED BY 6-1437532-3	5	2	.510	.595/.565	.150	-	.400	.900	1.500	1.600	32	6-1437536-6
SUPERCEDED BY 3-1437532-9	10	2	.510	.595/.565	.150	-	.400	.900	1.300	1.400	28	5-1437536-9
SUPERCEDED BY 3-1437532-9	5	2	.510	.595/.565	.150	-	.400	.900	1.300	1.400	28	5-1437536-8
SUPERCEDED BY 3-1437532-4	4	2	.510	.595/.565	.150	-	.400	.900	1.300	1.400	28	5-1437536-4
SUPERCEDED BY 2-1437532-6	10	4	.510	.595/.565	.150	-	.400	.900	1.100	1.200	24	5-1437536-1
SUPERCEDED BY 1-1437532-5	10	2	.510	.595/.565	.150	-	.400	.900	1.100	1.200	24	4-1437536-4
SUPERCEDED BY 1-1437532-5	5	2	.510	.595/.565	.150	-	.400	.900	1.100	1.200	24	4-1437536-3
SUPERCEDED BY 4-1437534-9	5	1	.510	.595/.565	.175	-	-	.800	1.000	1.150	22	3-1437536-6
SUPERCEDED BY 8-1437531-4	10	1	.510	.595/.565	.250	-	-	.500	.900	1.000	20	2-1437536-9
SUPERCEDED BY 8-1437531-4	5	1	.510	.595/.565	.250	-	-	.500	.900	1.000	20	2-1437536-8
SUPERCEDED BY 8-1437531-0	4	1	.510	.595/.565	.250	-	-	.500	.900	1.000	20	2-1437536-4
SUPERCEDED BY 7-1437531-1	10	1	.510	.595/.565	.150	-	-	.600	.800	.900	18	1-1437536-8
SUPERCEDED BY 7-1437531-1	5	1	.510	.595/.565	.150	-	-	.600	.800	.900	18	1-1437536-7
SUPERCEDED BY 6-1437531-6	4	1	.510	.595/.565	.150	-	-	.600	.800	.900	18	6-1437531-7
SUPERCEDED BY 4-1437531-5	10	1	.510	.595/.565	.150	-	-	.500	.700	.800	16	4-1437531-7
SUPERCEDED BY 4-1437531-5	5	1	.510	.595/.565	.150	-	-	.500	.700	.800	16	1437536-9
SUPERCEDED BY 4-1437531-6	6	1	.370	.455/.425	.150	-	-	.500	.700	.800	16	1437536-8
SUPERCEDED BY 4-1437531-1	4	1	.510	.595/.565	.150	-	-	.500	.700	.800	16	1437536-4
SUPERCEDED BY 2-1437531-2	10	1	.510	.595/.565	.150	-	-	.400	.600	.700	14	9-1437535-6
SUPERCEDED BY 2-1437531-2	5	1	.510	.595/.565	.150	-	-	.400	.600	.700	14	9-1437535-5
SUPERCEDED BY 1-1437531-8	4	1	.510	.595/.565	.150	-	-	.400	.600	.700	14	9-1437535-2
SUPERCEDED BY 8-1437529-1	10	3	.510	.595/.565	.200	-	-	-	.300	.400	8	1-1437535-7
SUPERCEDED BY 8-1437529-1	5	3	.510	.595/.565	.200	-	-	-	.300	.400	8	1-1437535-6
SUPERCEDED BY 6-1437529-9	10	3	.510	.595/.565	-	-	-	-	.200	.300	6	1-1437535-0
SUPERCEDED BY 6-1437529-6	4	3	.510	.595/.565	-	-	-	-	.200	.300	6	6-1437529-7

ECONOMY VERSION PART NUMBERS

SEE SHEET 2 FOR
PREMIUM VERSION PART NUMBERS

THIS DRAWING IS A CONTROLLED DOCUMENT.

DIMENSIONS: INCHES

TOLERANCES UNLESS OTHERWISE SPECIFIED:
0 PLC ± -
1 PLC ± -
2 PLC ± -
3 PLC ± .005
4 PLC ± -
ANGLES ± -

MATERIAL -
FINISH -

DWN BSV
CHK K.WRIGHT
APVD K.WRIGHT
PRODUCT SPEC —
APPLICATION SPEC —
WEIGHT —

TE Connectivity

NAME
CLOSED FRAME DIP, PREMIUM LEAD FREE
(REF AUGAT 500 SERIES)
PREMIUM (MACHINED CONTACT)

SIZE	CAGE CODE	DRAWING NO	RESTRICTED TO
A1	00779	C-1437532	—

CUSTOMER DRAWING | SCALE 4:1 | SHEET 3 OF 3 | REV 01

4805 (3/11)

Mouser Electronics

Authorized Distributor

Click to View Pricing, Inventory, Delivery & Lifecycle Information:

TE Connectivity:

3-1437532-0