THIS DRAWING IS UNPUBLISHED. RELEASED FOR PUBLICATION -,- .
© COPYRIGHT - By - ALL RIGHTS RESERVED.

| LOC | DIST |
|---|---|
| GP | 00 |

REVISIONS

| P | LTR | DESCRIPTION | DATE | DWN | APVD |
|---|---|---|---|---|---|
| | J1 | REVISED PER ECO-11-004835 | 11MAR11 | RK | HMR |

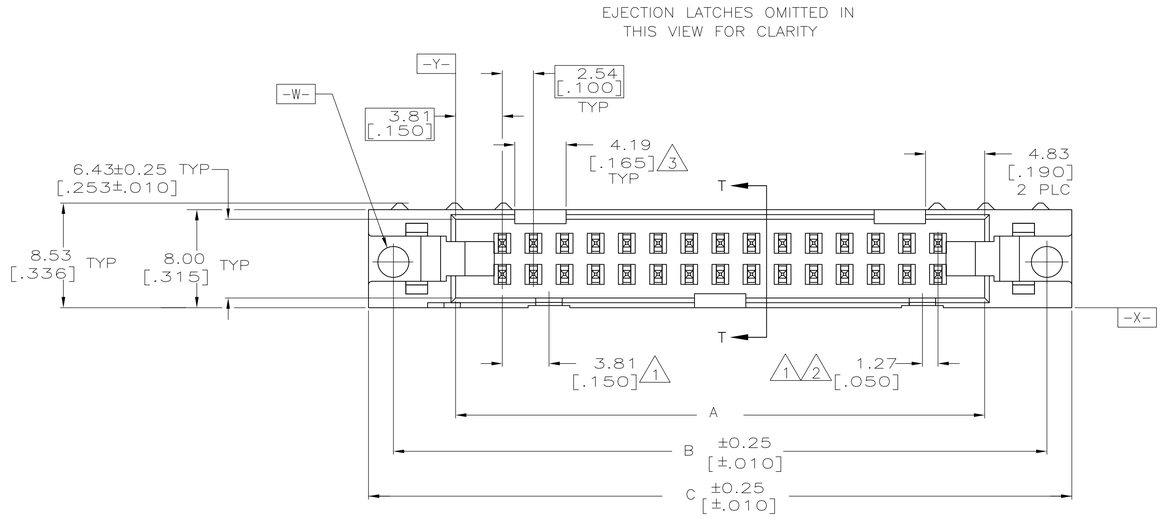


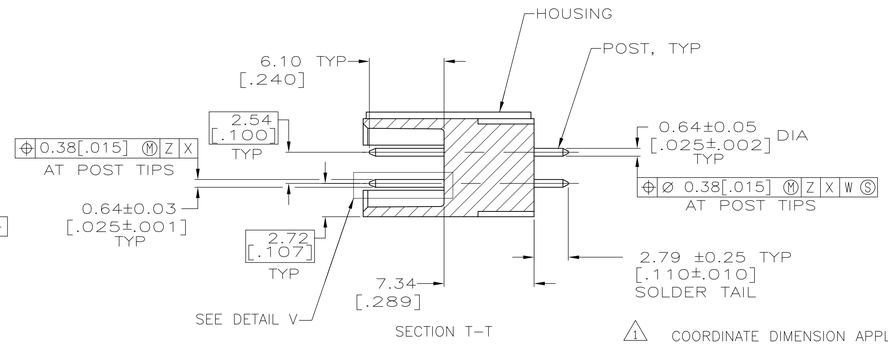


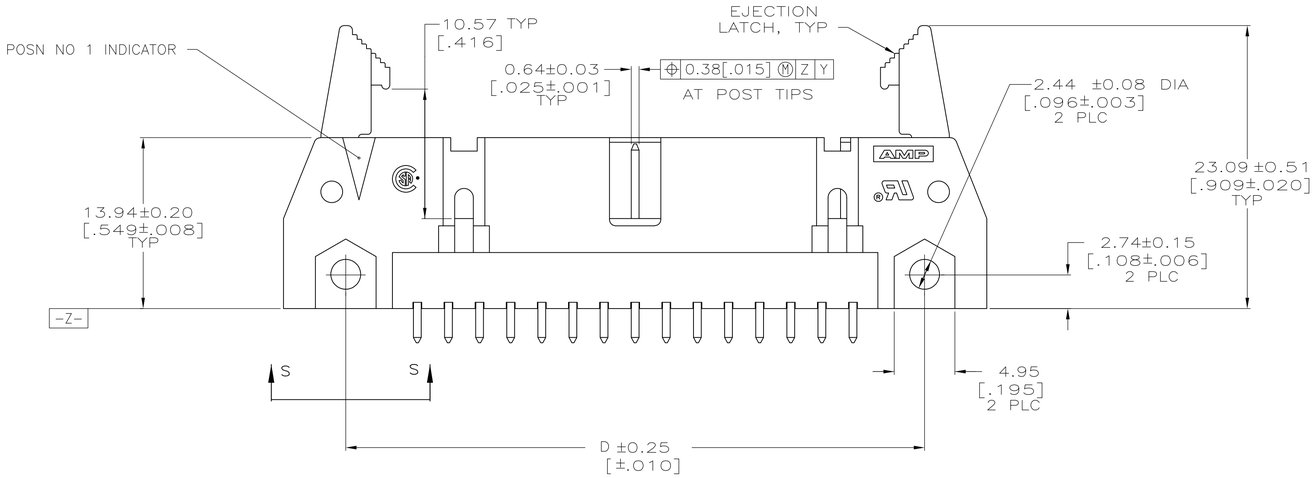


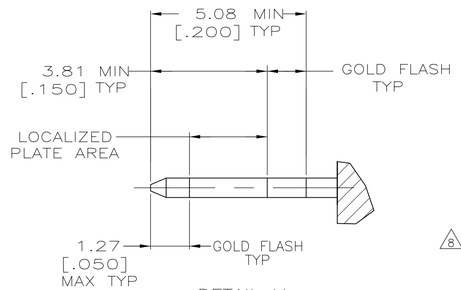


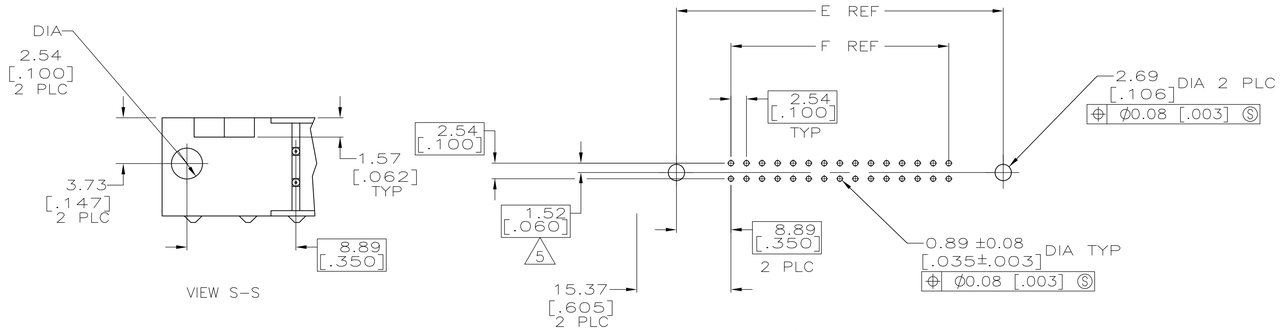


1. COORDINATE DIMENSION APPLIES FROM BASIC LOCATION.

2. 10 AND 14 POSITION SIZES CONTAIN ONLY ONE SLOT FOR SNAP-IN POLARIZER (MILITARY POLARIZATION) LOCATED AS SHOWN.

3. 10 POSITION SIZES CONTAIN ONLY ONE SLOT FOR DUAL POLARIZATION, LOCATED AS SHOWN.

4. RECOMMENDED PRINTED CIRCUIT BOARD THICKNESS IS 1.57 [.062].

5. DISTANCE REQUIRED BY EJECTION LATCHES IN THE OPEN POSITION.

6. POSTS:
GOLD FLASH OVER PALLADIUM-NICKEL PLATE, 0.38μm [.000015] MIN TOTAL ON THE LOCALIZED PLATE AREA,
2.54μm [.000100] MIN TIN-LEAD PLATE ON THE SOLDER-TAIL,
1.27μm [.000050] MIN NICKEL UNDERPLATE ON THE ENTIRE POST.
OR
0.38μm [.000015] MIN GOLD PLATE ON THE LOCALIZED PLATE AREA,
2.54μm [.000100] MIN TIN-LEAD PLATE ON THE SOLDER-TAIL,
1.27μm [.000050] MIN NICKEL UNDERPLATE ON THE ENTIRE POST.

7. MATERIAL:
HOUSING: GLASS FILLED NYLON OR POLYESTER, 94V-0 RATED, BLACK.
POSTS: BRASS.

8. OBSOLETE PARTS: OBSOLETE CIS STREAMLINING PER D.RENAUD/D.SINISI

| | F | E | D | C | B | A | NO OF POSN | PART NUMBER |
|---|---|---|---|---|---|---|---|---|
| OBSOLETE | 53.34 [2.100] | 71.12 [2.800] | 65.02 [2.560] | 75.18 [2.960] | 71.12 [2.800] | 60.96 [2.400] | 44 | 1-499910-3 |
| OBSOLETE | 78.74 [3.100] | 96.52 [3.800] | 90.42 [3.560] | 100.58 [3.960] | 96.52 [3.800] | 86.36 [3.400] | 64 | 1-499910-2 |
| SUPERSEDED BY 1-102154-1 | 73.66 [2.900] | 91.44 [3.600] | 85.34 [3.360] | 95.50 [3.760] | 91.44 [3.600] | 81.28 [3.200] | 60 | 1-499910-1 |
| | 60.96 [2.400] | 78.74 [3.100] | 72.64 [2.860] | 82.80 [3.260] | 78.74 [3.100] | 68.58 [2.700] | 50 | 1-499910-0 |
| | 48.26 [1.900] | 66.04 [2.600] | 59.94 [2.360] | 70.10 [2.760] | 66.04 [2.600] | 55.88 [2.200] | 40 | 499910-9 |
| | 40.64 [1.600] | 58.42 [2.300] | 52.32 [2.060] | 62.48 [2.460] | 58.42 [2.300] | 48.26 [1.900] | 34 | 499910-8 |
| 8 SUPERSEDED BY 5499910-7 | 35.56 [1.400] | 53.34 [2.100] | 47.24 [1.860] | 57.40 [2.260] | 53.34 [2.100] | 43.18 [1.700] | 30 | ~~499910-7~~ |
| | 30.48 [1.200] | 48.26 [1.900] | 42.16 [1.660] | 52.32 [2.060] | 48.26 [1.900] | 38.10 [1.500] | 26 | 499910-6 |
| | 27.94 [1.100] | 45.72 [1.800] | 39.62 [1.560] | 49.78 [1.960] | 45.72 [1.800] | 35.56 [1.400] | 24 | 499910-5 |
| | 22.86 [.900] | 40.64 [1.600] | 34.54 [1.360] | 44.70 [1.760] | 40.64 [1.600] | 30.48 [1.200] | 20 | 499910-4 |
| | 17.78 [.700] | 35.56 [1.400] | 29.46 [1.160] | 39.62 [1.560] | 35.56 [1.400] | 25.40 [1.000] | 16 | 499910-3 |
| | 15.24 [.600] | 33.02 [1.300] | 26.92 [1.060] | 37.08 [1.460] | 33.02 [1.300] | 22.86 [.900] | 14 | 499910-2 |
| | 10.16 [.400] | 27.94 [1.100] | 21.84 [.860] | 32.00 [1.260] | 27.94 [1.100] | 17.78 [.700] | 10 | 499910-1 |

THIS DRAWING IS A CONTROLLED DOCUMENT.

DIMENSIONS: mm [INCHES]

TOLERANCES UNLESS OTHERWISE SPECIFIED:
0 PLC ± -
1 PLC ± -
2 PLC ± 0.13[.005]
3 PLC ± -
4 PLC ± -
ANGLES ± -

MATERIAL 7 FINISH 6

DWN H.MOLL 4-23-90
CHK R.STONE 11-28-90
APVD -
PRODUCT SPEC 108-40018
APPLICATION SPEC -
WEIGHT -

TE Connectivity

NAME HEADER ASSY, UNIVERSAL, AMP-LATCH

| SIZE | CAGE CODE | DRAWING NO | RESTRICTED TO |
|---|---|---|---|
| A1 | 00779 | C-499910 | - |

CUSTOMER DRAWING SCALE 4:1 SHEET 1 OF 1 REV J1

4805 (3/11)

# Mouser Electronics

Authorized Distributor

Click to View Pricing, Inventory, Delivery & Lifecycle Information:

TE Connectivity:

499910-9