THIS DRAWING IS UNPUBLISHED. RELEASED FOR PUBLICATION 20
© COPYRIGHT 20 BY - ALL RIGHTS RESERVED.

REVISIONS

| P | LTR | DESCRIPTION | DATE | DWN | APVD |
|---|---|---|---|---|---|
| | G45 | REVISED PER ECO-13-011449 | 16JUL2013 | DLD | DCM |
| | G46 | REVISED PER ECO-14-007153 | 19MAY2014 | DLD | DCM |
| | G47 | REVISED PER ECO-14-014965 | 09OCT2013 | DLD | DCM |

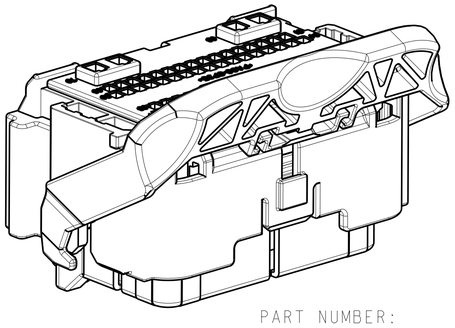

PART NUMBER:
1438136-1
SHOWN WITH SPACER
IN SEATED POSTION

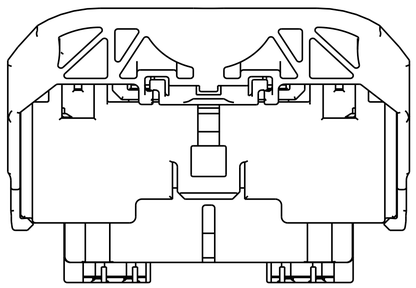

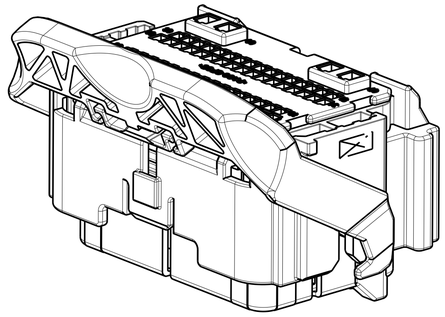

1. PRINT FORD PART NUMBER (SEE ATTACHED CHARTS) AND TRACEBILITY CODE (YY = 2 DIGIT YEAR, JJJ = JULIAN DATE, HH = 2 DIGIT MILITARY HOUR) IN THIS LOCATION AT ASSEMBLY. SEE SHEETS 3, 4 AND 5 (-*) PART NUMBERS.
2. APPLICABLE MOLEX (1.5) POWER TERMINAL PART NUMBERS:
   33012-0002 TIN 0.50-1.50mm$^2$
3. CAM LEVER AND SPACER ARE SHIPPED IN THEIR PRE-ASSEMBLED POSITIONS.
4. REFERENCE TE INSTRUCTION SHEET 408-8893.

5 COMPANY LOGO.

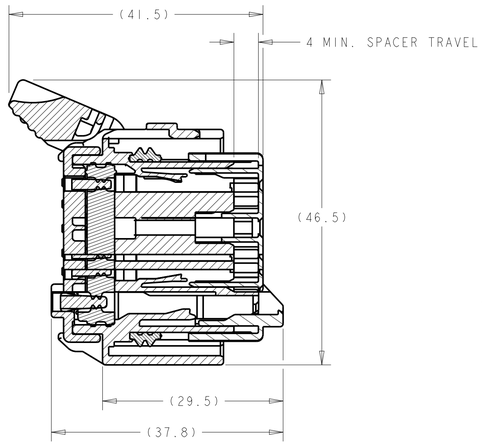


SECTION A-A
SPACER AND LEVER
IN PRE-SEATED POSITION
(DELIVERY POSITION)

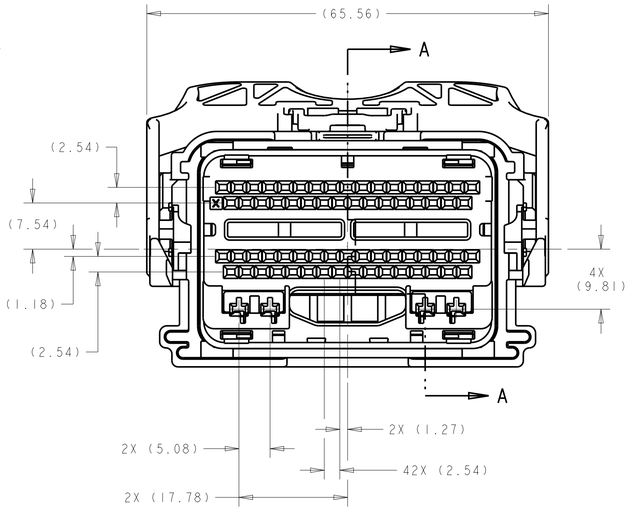


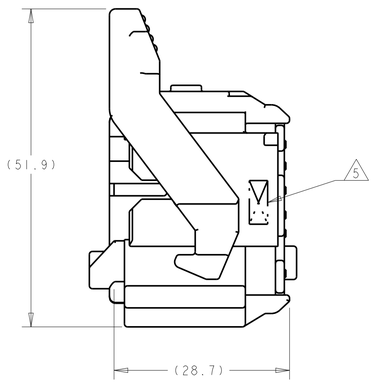


SHOWN WITH CAM
LEVER AND SPACER
IN LOADED POSTION

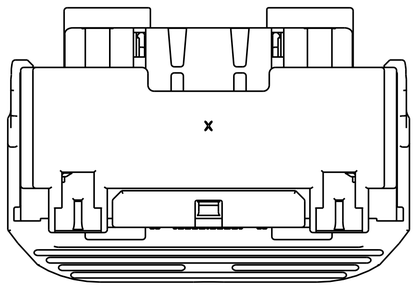

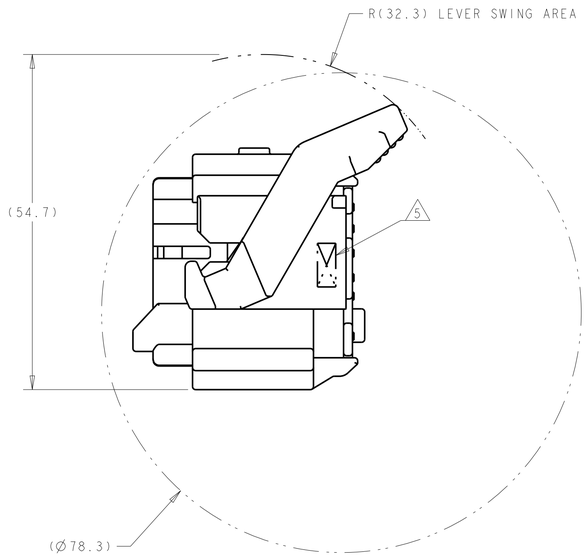


MIN. FEED THRU CONDITION
WITH 1mm CLEARANCE ALL AROUND
SHOWN WITH SPACER IN SEATED POSTION

APPLICABLE COMPONENTS (FOR REFERENCE ONLY)

| DESCRIPTION | NOMINAL TERMINAL SIZE | COLOR\ PLATING | FORD COMPONENT PART NUMBER | SUPPLIER PART NUMBER | MATERIAL/SPECIFICATION NUMBER | SAE WIRE SIZE |
|---|---|---|---|---|---|---|
| TERMINAL - FEMALE (Ag) | 0.64 (CAT. 0) | SILVER | 7S4T-14474-AA | 1393366-2 | COPPER ALLOY/SILVER PLATE | 20AWG |
| | | | | | | 18AWG |
| TERMINAL - FEMALE (Ag) | 0.64 (CAT. 0) | SILVER | 7S4T-14474-BA | 1393367-2 | COPPER ALLOY/SILVER PLATE | 22AWG |
| TERMINAL - FEMALE (Sn) | 0.64 (CAT. 0) | TIN | 1L2T-14474-AA | 1393366-1 | COPPER ALLOY/TIN PLATE | 20AWG |
| | | | | | | 18AWG |
| TERMINAL - FEMALE (Sn) | 0.64 (CAT. 0) | TIN | 1L2T-14474-BA | 1393367-1 | COPPER ALLOY/TIN PLATE | 22AWG |
| TERMINAL - FEMALE (Au) | 0.64 (CAT. 0) | GOLD | 1L2T-14474-CA | 1393365-1 | COPPER ALLOY/GOLD PLATE | 20AWG |
| | | | | | | 18AWG |
| TERMINAL - FEMALE (Au) | 0.64 (CAT. 0) | GOLD | 1L2T-14474-DA | 1393364-1 | COPPER ALLOY/GOLD PLATE | 22AWG |

SEE SHEETS 3 THRU 7
PART NUMBER

THIS DRAWING IS A CONTROLLED DOCUMENT.

DIMENSIONS: mm

TOLERANCES UNLESS OTHERWISE SPECIFIED:
0 PLC ±-
1 PLC ±0.3
2 PLC ±0.10
3 PLC ±-
4 PLC ±-
ANGLES ±1°

MATERIAL - -
FINISH - -

DWN R. VESTAL 15APR2005
CHK T. VALASEK 15APR2005
APVD T. VALASEK 15APR2005
PRODUCT SPEC -
APPLICATION SPEC -
WEIGHT -

TE Connectivity

NAME 70-WAY HARNESS ASSEMBLY

| SIZE | CAGE CODE | DRAWING NO | RESTRICTED TO |
|---|---|---|---|
| A1 | 00779 | C-1438136 | - |

CUSTOMER DRAWING SCALE 2:1 SHEET 1 OF 11 REV G47

4805 (3/13)

THIS DRAWING IS UNPUBLISHED. RELEASED FOR PUBLICATION 20
© COPYRIGHT 20 BY - ALL RIGHTS RESERVED.

REVISIONS

| P | LTR | DESCRIPTION | DATE | DWN | APVD |
|---|---|---|---|---|---|
| | - | SEE SHEET 1 | - | - | - |

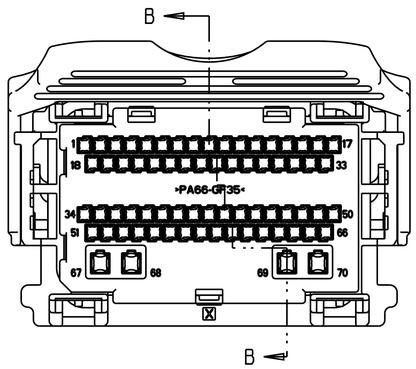


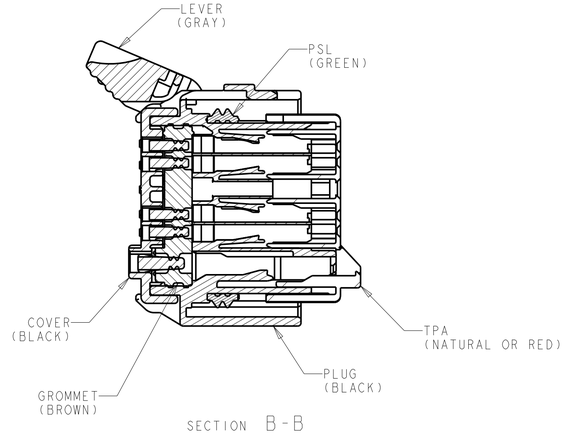


SECTION B-B

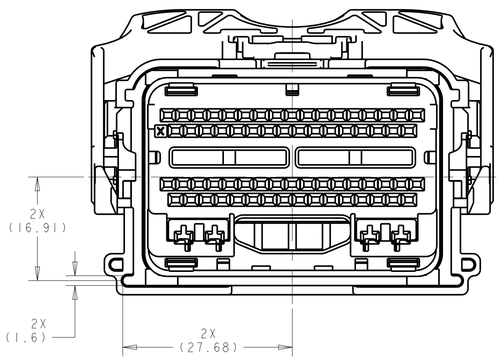


KEYING OPTION "A"

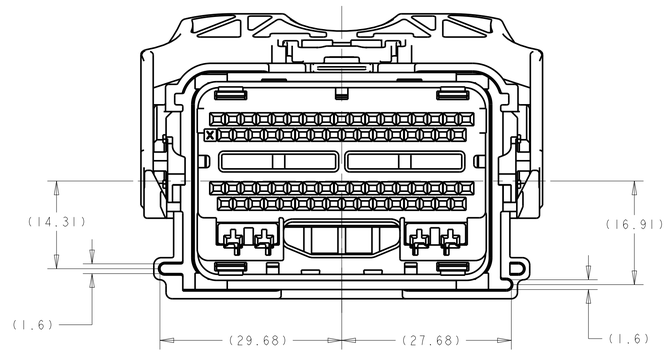


KEYING OPTION "B"

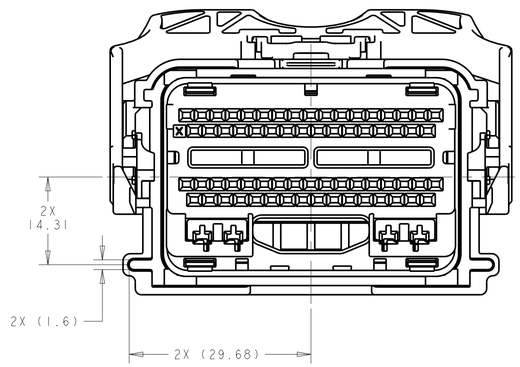


KEYING OPTION "C"

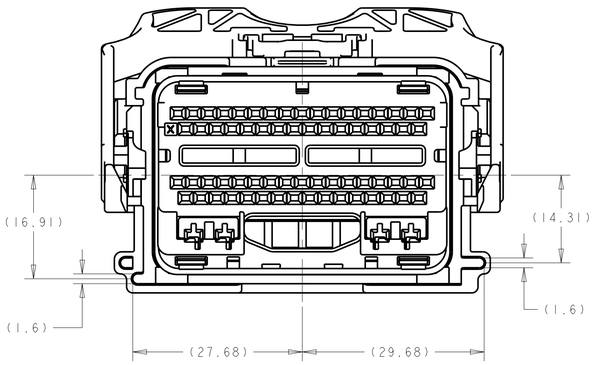


KEYING OPTION "D"

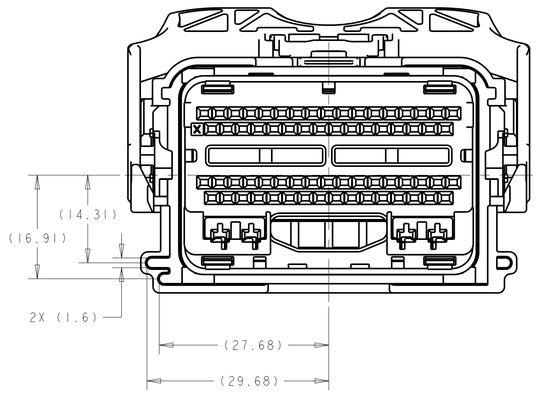


KEYING OPTION "E"

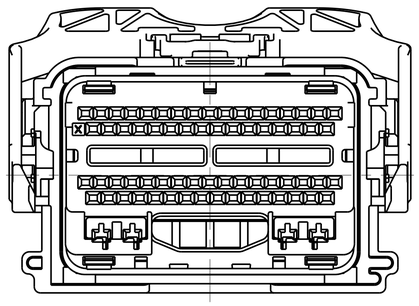

KEYING OPTION "F"

THIS DRAWING IS A CONTROLLED DOCUMENT.

DIMENSIONS: mm

TOLERANCES UNLESS OTHERWISE SPECIFIED:
0 PLC ±-
1 PLC ±0.3
2 PLC ±0.10
3 PLC ±-
4 PLC ±-
ANGLES ±1°

MATERIAL - -

FINISH - -

| | | |
|---|---|---|
| DWN | R. VESTAL | 15APR2005 |
| CHK | T. VALASEK | 15APR2005 |
| APVD | T. VALASEK | 15APR2005 |

PRODUCT SPEC -

APPLICATION SPEC -

WEIGHT -

TE Connectivity

NAME 70-WAY HARNESS ASSEMBLY

| SIZE | CAGE CODE | DRAWING NO | RESTRICTED TO |
|---|---|---|---|
| A1 | 00779 | C-1438136 | - |

CUSTOMER DRAWING

| SCALE | SHEET | OF | REV |
|---|---|---|---|
| 2:1 | 2 | 11 | G47 |

4805 (3/13)

THIS DRAWING IS UNPUBLISHED. RELEASED FOR PUBLICATION 20
© COPYRIGHT 20 BY - ALL RIGHTS RESERVED.

REVISIONS

| P | LTR | DESCRIPTION | DATE | DWN | APVD |
|---|---|---|---|---|---|
| | - | SEE SHEET 1 | - | - | - |
| | | | | | |
| | | | | | |
| | | | | | |

| | | | | | | | | | | | | | | | | | | | | | | | | | | | | | | | | | | | | | | | | | | | | | | | | | | | | | | | | | | | | | | | | | | | | | | | | |
|---|---|---|---|---|---|---|---|---|---|---|---|---|---|---|---|---|---|---|---|---|---|---|---|---|---|---|---|---|---|---|---|---|---|---|---|---|---|---|---|---|---|---|---|---|---|---|---|---|---|---|---|---|---|---|---|---|---|---|---|---|---|---|---|---|---|---|---|---|---|---|---|---|
| KEYING OPTION A ||||||65|64|63|62||||||56||||||||||||||42||40|39|||||33|32|||||27|26|25|24|23|22|21|20|19|18|||||13|||||8|7|6||||2|1| 9-1438136-6 | 5L3T-14A464-DA-054 |
| ||||||65|64|63|62||||||56|||||||||||||43|42||40|39|||||33|||||||||24|||21|20||18|||||13|||||8||||||3|2|1| 8-1438136-8 | 5L3T-14A464-DA-053 |
| ||||||65|64|63|62||||||56|||||||49|48|||||43|42||40|39|||||33||31|30|||27||||23||21|||18|||||13|||||8|||5|4|3|2|1| 8-1438136-3 | 5L3T-14A464-DA-052 |
| ||||||65||||||||||56||||||50|49|48||||44|43|42||40|39|||||33||31|30||||||24|||||20|||||||13|||||8||||||3|2|1| 8-1438136-2 | 5L3T-14A464-DA-051 |
| |||||||64|63|62|||||57|56|55|||||50|||||||43|||||39|38||||||32|||||27|26|25|||22|||||||||14|13||||9|8||||||3||| 8-1438136-1 | 5L3T-14A464-DA-050 |
| |||||||64|63|62|||||57|56|55|||||50|||||||43|||||39|38||||||32|||29|28|27|26|25|||22|||||||||14|13||||9|8||||||3||| 7-1438136-8 | 5L3T-14A464-DA-049 |
| ||||||65|64|63|62|||||57|56||||||||||||||42||40|39|||||33|32|||||26|25|24|23|22|21|20|19|18|||||13|||||8|7|6||||2|1| 7-1438136-7 | 5L3T-14A464-DA-048 |
| ||||||65|64|63|62||||||56|||||||49|48|||||43|42||40|39|||||33||31|30|||||||23||21|||18|||||13|||||8|||5|4|3|2|1| 7-1438136-5 | 5L3T-14A464-DA-047 |
| ||||||65||||||||||56||||||50||||||44|43|42||40|39|||||33|||||||||24|||||20|||||||13|||||8||||||3|2|1| 7-1438136-4 | 5L3T-14A464-DA-046 |
| ||||||65|64|63|62||||||56|||||||||||||43|42||40|39|||||33|||||||27|||24|||21|20||18|||||13|||||8||||||3|2|1| 7-1438136-3 | 5L3T-14A464-DA-045 |
| |||68|67||65|64|||||||||56|55|||||50||||||44|43|42|41|40|39|38|||||33||31|30|||27|||24||||20|||||15|14|13||11|10|9|8||||||2|1| 7-1438136-2 | 5L3T-14A464-DA-044 |
| |70||68|67|66|65|64|63|||60|59||||55|54|||51|50||||||44|43|42||40||38|37|||34||32|31|30|29||27|||24|23||21|20|19|18||16|15|14|||11|10|9||||5|4|3|2|1| 7-1438136-1 | 5L3T-14A464-DA-043 |
| |||||||64|63|62|||||57|56|55|||||50|||||||43|42|||39|38||||||32|||||27||25|||22|21|20|19|18||||14|||||9|8|7||5||||1| 6-1438136-9 | 5L3T-14A464-DA-042 |
| |||68|67||65|64|||||||||56||||||50||||||44|43|42||40|39|||||33||31|30|||27|||24|23|||20||18|||||13|||||8||||4||2|1| 6-1438136-8 | 5L3T-14A464-DA-041 |
| |||68|67|||64|63|62||||||56||||||50||||||44|43|42||40|39|||||33||31|30|||27|||24|23||21|20||18|||||13|||||8|7|6|||||| 6-1438136-7 | 5L3T-14A464-DA-040 |
| |||68|67|||64|63|62|||||||||||||50|49|48||||44|43|42||40|||||||33||31|30|||27|||24|23||21|20||18|||||||||||7|6||4|3||| 6-1438136-6 | 5L3T-14A464-DA-039 |
| |||68|67|66|65|64||62||60|59|||56|55||||51|50||||||44|43|42|41|40|39|38||||34||32|31|30|||27|||24|23|||20|19||||15|14|13||11|10|9|8|7||5|4|3|2|1| 6-1438136-5 | 5L3T-14A464-DA-038 |
| |||68|67|66|65|64||62||60|59|||56|55||||51|50||||||44|43|42|41|40|39|38||||34||32|31|30|||27|||24|23|||20|19||||15|14|13||11|10|9|8|7||5|4||2|1| 6-1438136-4 | 5L3T-14A464-DA-037 |
| |70||68|67|66|65|64|63|||60|59||||55|54|||51|50||||||44|43|42||40||38|37|||34||32|31|30|29||27|||24|23||21|20|19|||16|15|14|||11|10|9||||5|4|3|2|1| 6-1438136-3 | 5L3T-14A464-DA-036 |
| |||||||64|63|62|||||57|56|55|||||50|||||||43|||||39|38||||||32|||||27|26|25|||22|21|20|19|18||||14|13||||9|8|7|6|5|4|3||| 6-1438136-2 | 5L3T-14A464-DA-035 |
| |||||||64|63|62|||||57|56|55|||||50|||||||43|||||39|38||||||32|||||27|26|25||23|22|21|20|19|18||||14|13||||9|8|7|6|5|4|||| 6-1438136-0 | 5L3T-14A464-DA-034 |
| |||68|67||65|64|||||||||56|55|||||||||||||44||42||40|39|38|||||33||31|30|||27|||24|23|||20||18|||15|14|13||11|10|9|8|7||5|4||2|1| 5-1438136-9 | 5L3T-14A464-DA-033 |
| |||68|67|||||||||||||||||||50||||||44|43|42||40|||||||33|||||||27|||24||||20||18||||||||||||7|||||2|| 5-1438136-8 | 5L3T-14A464-DA-032 |
| |||68|67|||||63|62|||||||||||||50||||||44|43|42||40|||||||33|||||||27|||24|||21|20||18||||||||||||7|||||2|| 5-1438136-7 | 5L3T-14A464-DA-031 |
| |||||||64|63|62||||||56||||||||||||||42||40|39|||||33|||||||||24|23||21|20||18|||||13|||||8|7|||||| 5-1438136-6 | 5L3T-14A464-DA-030 |
| |||68|67|66|65|64||||60|59||||55||||51|50||||||44|43|42||40||38||||34||32|31|30|||27|||24|23|||20|19||||15|14|||11|10|9||||5|4||2|1| 5-1438136-5 | 5L3T-14A464-DA-029 |
| |||68|67|||64|||||||||56||||||50||||||44|43|42||40|39|||||33||31|30|||27|||24|23|||20||18|||||13|||||8|7|6|||||| 4-1438136-9 | 5L3T-14A464-DA-028 |
| |70||68|||||63||||||||56|55|54|||||||||||||44||42||40|39|38|37||||33|32|31|30|29||27||25|24||22|21||19||||15|14||||10|||||5|4||2|1| 4-1438136-3 | 5L3T-14A464-DA-027 |
| |70||68|||||63||||||||56|55|54|||||||||||||44||42||40|39|38|37||||33|32|31|30|29||27|||24||22|21||19||||15|14||||10||||||4||2|1| 4-1438136-2 | 5L3T-14A464-DA-026 |
| |||||||64|63|||||||56|55|||||50|||||||43|42|41|40|39|38||||||32|31|30|||27||25|||22|21|20|19|||||14||||||||||5||||1| 4-1438136-1 | 5L3T-14A464-DA-025 |
| |||68|67|||64|||||||||56||||||50||||||44|43|42||40|39|||||33||31|30|||27|26|25||23|22||20|19|18|||||13|||||8|7|6|5|4|3|2|1| 4-1438136-0 | 5L3T-14A464-DA-024 |
| |||68|67|||64|63|62||||||56||||||50||||||44|43|42||40|39|||||33||31|30|||27|||24|23||21|20||18|||||13|||||8|7|6||||2|| 3-1438136-9 | 5L3T-14A464-DA-023 |
| |||68|67|||64|63|62|||||||||||||50|49|48||||44|43|42||40|||||||33||31|30|||27|||24|23||21|20||18|||||||||||7|6|||||| 3-1438136-8 | 5L3T-14A464-DA-022 |
| |||68|67|||64||62||||||56||||||50||||||44|43|42||40|39|||||33||31|30|||27|||24|23|||20||18|||||13|||||8|7|6||||2|| 3-1438136-7 | 5L3T-14A464-DA-021 |
| |||68|67|||64|||||||||56||||||50||||||44|43|42||40|39|||||33||31|30|||27|||24|23|||20|19|18|||||13|||||8|7|6|||||| 3-1438136-6 | 5L3T-14A464-DA-020 |
| ||||||65|64|63|62||||||56|||||||||||||43|42||40|39|||||33||||||||||23||21|||18|||||13|||||8|||5|4|3|2|1| 3-1438136-5 | 5L3T-14A464-DA-019 |
| |||68|67||65|64|||||||||56|55|||||50||||||44|43|42|41|40|39|38|||||33||31|30|||27||||23|||||||||15|14|13||11|10|9|8|||5|4||2|1| 3-1438136-4 | 5L3T-14A464-DA-018 |
| |||68|67|||64|63|62|||||||||||||50|49|48||||44|43|42||40|||||||33||31|30|||27|||24|23||21|20||18|||||||||||7|6||4|3|2|| 3-1438136-3 | 5L3T-14A464-DA-017 |
| |||68|67|||64|63|62||||||56||||||50||||||44|43|42||40|39|||||33||31|30|||27|||24|23||21|20||18|||||13|||||8|7|6||4|3|2|| 3-1438136-2 | 5L3T-14A464-DA-016 |
| |||68|67||||63|62|||||||||||||50||||||44|43|42||40|||||||33|||||||27|||24|23||21|20||18||||||||||||7|6||||2|| 3-1438136-1 | 5L3T-14A464-DA-015 |
| |||||||64|63|62||||||56||||||||||||||42||40|39|||||33|||||||||24|23||21|20||18|||||13|||||8|7|6|||||| 3-1438136-0 | 5L3T-14A464-DA-014 |
| |||||||64|63|62||||||56||||||||||||||42||40|39|||||33|||||||26|25||23|22|21|20||18|||||13|||||8|7|6|5|4|3|2|1| 2-1438136-7 | 5L3T-14A464-DA-013 |
| |||68|67|||64|||||||||56|55|||||||||||||44||42||40|39|38|||||33||31|30|||27|26|25|24|23|22||20||18|||15|14|13||11|10|9|8|7|6|5|4||2|1| 2-1438136-6 | 5L3T-14A464-DA-012 |
| |||||||64|63|62||||||56||||||||||||||42||40|39|||||33|||||||||24|23||21|20||18|||||||||||||||||||2|1| 2-1438136-4 | 5L3T-14A464-DA-011 |
| |||68|67|||64|||||||||56|55|||||50||||||44|43|42|41|40|39|38|||||33||31|30|||27|||24|23|||20|||||15|14|||11|10|9|||||||2|1| 2-1438136-3 | 5L3T-14A464-DA-010 |
| |||||||64|63|62||||||56||||||||||||||42||40|39|||||33|||||||26|25|24|23|22|21|20||18|||||13|||||8|7|6|5|4|3|2|1| 2-1438136-2 | 5L3T-14A464-DA-009 |
| |||68|67|||||||||||||56||||||50||||||44|43|42||40|39|||||33||31|30|||27|26|25||23|22||20|19|18|||||13|||||8|7|6|5|4|3|2|1| 1-1438136-6 | 5L3T-14A464-DA-008 |
| |||68|67|||64|||||||58||56|55|||||50||||||44|43|42|41|40|39|38|||||||31|30|||27|||||||20|||||15|14|||11|10|9|||||||2|1| 1-1438136-5 | 5L3T-14A464-DA-007 |
| |||||||64|63|62||||58|57|56||||||||||||||42||40|39||||||||||||||||24|||21|20||18|||||||||||||||||||2|1| 1-1438136-4 | 5L3T-14A464-DA-006 |
| |||68|67|||64|||||||58|57|56|55|||||50||||||44|43|42|41|40|39|38|||||||31|30|||27|||||||20|||||15|14|||11|10|9|||||||2|1| 1-1438136-3 | 5L3T-14A464-DA-005 |
| |||68|67|||||||||||||56||||||50||||||44|43|42||40|39|||||33||31|30|||27|26|25||23|22|||19|18|||||13|||||8|7|6|5|4|3|2|1| 1-1438136-0 | 5L3T-14A464-DA-004 |
| CAVITIES WITH A NUMERIC SYMBOL INDICATES CLOSED TERMINAL LOCATIONS |||||||64|63|62||||||56||||||||||||||42||40|39|||||33|||||||26|25||23|22|21|20|19|18|||||13|||||8|7|6|5|4|3|2|1| 1438136-9 | 5L3T-14A464-DA-003 |
| |||||||64|63|62||||||56||||||||||||||42||40|39||||||||31|30||||26|25|||22|21||19|18|||||13|||||8|7|6|5|4|3|2|1| 1438136-8 | 5L3T-14A464-DA-002 |
| BLANK CAVITIES INDICATES OPEN TERMINAL HOLE LOCATIONS |||68|67|||||||||||||56||||||50||||||44|43|42||40|39||||||||31|30|||27|26|25|||22|||19|18|||||13|||||8|7|6|5|4|3|2|1| 1438136-7 | 5L3T-14A464-DA-001 |
| ||||||||||||||||||||||||||||||||||||||||||||||||||||||||||||||||||||||| 1438136-1 | 5L3T-14A464-DA-000 |
| TERMINAL HOLE POSITION | 70 | 69 | 68 | 67 | 66 | 65 | 64 | 63 | 62 | 61 | 60 | 59 | 58 | 57 | 56 | 55 | 54 | 53 | 52 | 51 | 50 | 49 | 48 | 47 | 46 | 45 | 44 | 43 | 42 | 41 | 40 | 39 | 38 | 37 | 36 | 35 | 34 | 33 | 32 | 31 | 30 | 29 | 28 | 27 | 26 | 25 | 24 | 23 | 22 | 21 | 20 | 19 | 18 | 17 | 16 | 15 | 14 | 13 | 12 | 11 | 10 | 9 | 8 | 7 | 6 | 5 | 4 | 3 | 2 | 1 | ASSEMBLY PART NUMBER | FORD PART NUMBER |

5L3T-14A464-D* PIN-OUT CHART

THIS DRAWING IS A CONTROLLED DOCUMENT.

DIMENSIONS: mm

TOLERANCES UNLESS OTHERWISE SPECIFIED:
0 PLC ±-
1 PLC ±0.3
2 PLC ±0.10
3 PLC ±-
4 PLC ±-
ANGLES ±1°

MATERIAL - -
FINISH - -

DWN R. VESTAL 15APR2005
CHK T. VALASEK 15APR2005
APVD T. VALASEK 15APR2005
PRODUCT SPEC -
APPLICATION SPEC -
WEIGHT -

TE Connectivity

NAME: 70-WAY HARNESS ASSEMBLY

SIZE A1 | CAGE CODE 00779 | DRAWING NO C-1438136 | RESTRICTED TO -

CUSTOMER DRAWING | SCALE 2:1 | SHEET 3 OF 11 | REV G47

4805 (3/13)

THIS DRAWING IS UNPUBLISHED. RELEASED FOR PUBLICATION 20
© COPYRIGHT 20 BY - ALL RIGHTS RESERVED.

REVISIONS

| P | LTR | DESCRIPTION | DATE | DWN | APVD |
|---|---|---|---|---|---|
| | - | SEE SHEET 1 | - | - | - |
| | | | | | |
| | | | | | |
| | | | | | |

| | | | | | | | | | | | | | | | | | | | | | | | | | | | | | | | | | | | | | | | | | | | | | | | | | | | | | | | | | | | | | | | | | | | | | | | | | |
|---|---|---|---|---|---|---|---|---|---|---|---|---|---|---|---|---|---|---|---|---|---|---|---|---|---|---|---|---|---|---|---|---|---|---|---|---|---|---|---|---|---|---|---|---|---|---|---|---|---|---|---|---|---|---|---|---|---|---|---|---|---|---|---|---|---|---|---|---|---|---|---|---|
| KEYING OPTION A | 70 | 69 | 68 | 67 | | 65 | | 63 | 62 | 61 | 60 | 59 | | | 56 | | | | | 51 | 50 | 49 | 48 | 47 | 46 | 45 | 44 | 43 | 42 | | 40 | | | | 36 | | 34 | 33 | | 31 | 30 | 29 | 28 | 27 | 26 | 25 | 24 | 23 | 22 | 21 | 20 | | 18 | 17 | 16 | 15 | 14 | 13 | 12 | 11 | 10 | 9 | 8 | 7 | 6 | 5 | | | | | 9-2035383-9 | 5L3T-14A464-DA-080 |
| | | 69 | | | 66 | 65 | 64 | 63 | 62 | 61 | 60 | 59 | 58 | 57 | 56 | 55 | 54 | 53 | 52 | | | | | | | | | | | | | | | | | | 34 | 33 | 32 | 31 | 30 | | | 27 | 26 | 25 | 24 | | | | 20 | | | 17 | 16 | | | | 12 | | | | 8 | | | | 4 | 3 | | | 9-2035383-5 | 5L3T-14A464-DA-079 |
| | 70 | 69 | | | 66 | 65 | 64 | 63 | 62 | 61 | 60 | 59 | 58 | | 56 | 55 | 54 | 53 | | 51 | 50 | 49 | 48 | | 46 | 45 | 44 | 43 | 42 | 41 | 40 | 39 | 38 | 37 | 36 | 35 | 34 | 33 | 32 | 31 | 30 | 29 | 28 | 27 | 26 | 25 | 24 | 23 | 22 | | 20 | 19 | 18 | 17 | 16 | 15 | | | 12 | 11 | 10 | 9 | | 7 | 6 | 5 | 4 | 3 | 2 | 1 | 9-2035383-3 | 5L3T-14A464-DA-078 |
| | | | | | | 65 | | | | | | | | | | | | | | | | | | | | | | | | | 40 | | 38 | | 36 | 35 | | | | 31 | 30 | | | | | | | | 22 | 21 | 20 | | | 17 | 16 | 15 | 14 | | 12 | 11 | | 9 | 8 | 7 | 6 | | | | | | 1-2035383-4 | 5L3T-14A464-DA-077 |
| | | | | | | | 64 | 63 | 62 | | | | | | 56 | | | | | | 50 | | | | | | | 43 | 42 | | 40 | 39 | | | | | | 33 | | | | | | 27 | | | | | | 21 | 20 | | 18 | | | | | 13 | | | | | 8 | | 6 | | | | 2 | | 1-2035383-0 | 5L3T-14A464-DA-076 |
| | | | 68 | 67 | | 65 | 64 | | | | | | | | 56 | | | | | | 50 | | | | | | 44 | 43 | 42 | | 40 | 39 | | | | | | 33 | | 31 | 30 | | | 27 | | | 24 | 23 | | | 20 | | 18 | | | | | 13 | | | | | 8 | | | | 4 | 3 | 2 | 1 | 2035383-8 | 5L3T-14A464-DA-075 |
| | | | 68 | 67 | | | 64 | 63 | 62 | | | | | 57 | | | | | | | 50 | 49 | 48 | | | | 44 | 43 | 42 | | 40 | | | | | | | 33 | 32 | 31 | 30 | | | 27 | | | 24 | | | 21 | 20 | 19 | 18 | | | | | | | | | | | | | | | | 2 | | 2035383-2 | 5L3T-14A464-DA-074 |
| | | | 68 | 67 | | | 64 | 63 | | | 60 | | | 57 | | | 54 | 53 | 52 | | 50 | 49 | 48 | | 46 | 45 | | 43 | 42 | | 40 | | 38 | 37 | 36 | 35 | 34 | 33 | 32 | 31 | 30 | 29 | 28 | 27 | 26 | 25 | 24 | 23 | 22 | 21 | 20 | 19 | | | | 15 | 14 | 13 | 12 | | 10 | 9 | 8 | | 6 | 5 | 4 | 3 | | 1 | 7-1456659-1 | 5L3T-14A464-DA-073 |
| | | | | | | 65 | 64 | 63 | 62 | | | | | | 56 | | | | | | | | | | | | | 43 | 42 | | 40 | 39 | | | | | | 33 | | | | | | 27 | | | | 23 | | 21 | | | 18 | | | | | 13 | | | | | 8 | | | 5 | 4 | | 2 | 1 | 5-1456659-9 | 5L3T-14A464-DA-072 |
| | | | | | | | 64 | 63 | 62 | | | | | 57 | 56 | 55 | | | | | 50 | | | | | | | 43 | 42 | | | 39 | 38 | | | | | | 32 | | | | | 27 | | 25 | | | 22 | 21 | 20 | 19 | 18 | | | | 14 | | | | | 9 | 8 | 7 | 6 | 5 | | | 2 | 1 | 5-1456659-8 | 5L3T-14A464-DA-071 |
| | | | 68 | 67 | | | | 63 | 62 | | | | | | | | | | | | 50 | | | | | | 44 | 43 | 42 | | 40 | | | | | | | 33 | | | | | | 27 | | | | | | 21 | 20 | | 18 | | | | | | | | | | | | 6 | | | | 2 | | 5-1456659-7 | 5L3T-14A464-DA-070 |
| | | | | | | | 64 | 63 | 62 | | | | | | 56 | | | | | | 50 | | | | | | | 43 | 42 | | 40 | 39 | | | | | | 33 | | | | | | 27 | | | | | | 21 | 20 | | 18 | | | | | 13 | | | | | 8 | | 6 | | | | | | 5-1456659-6 | 5L3T-14A464-DA-069 |
| | | | | | | 65 | 64 | 63 | 62 | | | | | 57 | 56 | 55 | | | | | 50 | | | | | | | 43 | | | | 39 | 38 | | | | | 33 | 32 | | | | | 27 | 26 | 25 | | | 22 | | | | | | | | 14 | 13 | | | | 9 | 8 | | | | | 3 | | | 5-1456659-4 | 5L3T-14A464-DA-068 |
| | | | | | | 65 | 64 | 63 | 62 | | | | | 57 | 56 | 55 | | | | | 50 | | | | | | | 43 | | | | 39 | 38 | | | | | 33 | 32 | | | | | 27 | 26 | 25 | | | 22 | 21 | 20 | 19 | 18 | | | | 14 | 13 | | | | 9 | 8 | 7 | 6 | 5 | 4 | 3 | | | 4-1456659-9 | 5L3T-14A464-DA-067 |
| | | | | | | 65 | 64 | 63 | 62 | | | | | 57 | 56 | 55 | | | | | 50 | | | | | | | 43 | | | | 39 | 38 | | | | | 33 | 32 | | | 29 | 28 | 27 | 26 | 25 | | | 22 | | | | | | | | 14 | 13 | | | | 9 | 8 | | | | | 3 | | | 4-1456659-8 | 5L3T-14A464-DA-066 |
| | | | | | | 65 | | | | | | | | | | | | | 52 | | | | 48 | 47 | | | | | | | 40 | | 38 | | 36 | 35 | | | 32 | 31 | 30 | 29 | | | | | | | 22 | 21 | 20 | | 18 | 17 | 16 | 15 | 14 | 13 | 12 | 11 | | 9 | 8 | 7 | 6 | | | | | | 4-1456659-7 | 5L3T-14A464-DA-065 |
| | | | 68 | 67 | | | 64 | 63 | 62 | | | | | 57 | | | | | | | 50 | 49 | 48 | | | | 44 | 43 | 42 | | 40 | | | | | | | 33 | 32 | 31 | 30 | | | 27 | | | 24 | | | 21 | 20 | 19 | 18 | | | | | | | | | | | | | | | | | | 3-1456659-8 | 5L3T-14A464-DA-064 |
| | | | 68 | 67 | | | | | 62 | 61 | | | | | | | | 53 | 52 | | | 49 | | | | | | 43 | | | | | | 37 | 36 | | | | 32 | | 30 | 29 | 28 | | | | | | 22 | | | | 18 | | 16 | | 14 | 13 | | | 10 | 9 | 8 | | | | | | | | 3-1456659-4 | 5L3T-14A464-DA-063 |
| | | | | | | 65 | | | | | | | | | | | | 53 | 52 | | | | 48 | 47 | 46 | 45 | 44 | | | | | | 38 | 37 | | | | | | 31 | 30 | 29 | 28 | 27 | 26 | 25 | 24 | 23 | 22 | 21 | 20 | | 18 | | | | | 13 | | | 10 | | | 7 | 6 | | | | | | 3-1456659-1 | 5L3T-14A464-DA-062 |
| | | | 68 | 67 | | 65 | 64 | | | | | | | | 56 | | | | | | 50 | | | | | | 44 | 43 | 42 | | 40 | 39 | | | | | | 33 | | 31 | 30 | | | 27 | | | | 23 | | | 20 | | 18 | | | | | 13 | | | | | 8 | 7 | | 5 | | | 2 | 1 | 2-1456659-9 | 5L3T-14A464-DA-061 |
| | | | | | | | 64 | 63 | 62 | | | | | | 56 | | | | | | | | | | | | | | 42 | | 40 | 39 | | | | | | 33 | | | | | | 27 | | | 24 | | | 21 | 20 | | 18 | | | | | 13 | | | | | 8 | 7 | | | | | | | 2-1456659-0 | 5L3T-14A464-DA-060 |
| | | | 68 | 67 | | 65 | | 63 | 62 | | | | | | | | | | | | 50 | | | | | | 44 | 43 | 42 | | 40 | | | | | | | 33 | | | | | | 27 | 26 | 25 | 24 | 23 | 22 | 21 | 20 | | 18 | | | | | | | | | | | 7 | 6 | | 4 | 3 | 2 | 1 | 1-1456659-9 | 5L3T-14A464-DA-059 |
| CAVITIES WITH A NUMERIC SYMBOL INDICATES CLOSED TERMINAL LOCATIONS | | | 68 | 67 | | | 64 | 63 | 62 | | | | | | | | | | | | 50 | | | | | | 44 | 43 | 42 | | 40 | | | | | | | 33 | | | | | | 27 | | | 24 | | | 21 | 20 | | 18 | | | | | | | | | | | 7 | | | | | 2 | | 1-1456659-8 | 5L3T-14A464-DA-058 |
| | | | 68 | 67 | | | | | | | | | | | | | | | | | 50 | | | | | | 44 | 43 | 42 | | 40 | | | | | | | 33 | 32 | | | | | 27 | | | 24 | 23 | | | 20 | 19 | 18 | | | | | | | | | | | | | | | | | | 1456659-3 | 5L3T-14A464-DA-057 |
| BLANK CAVITIES INDICATES OPEN TERMINAL HOLE LOCATIONS | | | | | | 65 | 64 | | | | | | | | 56 | | | | | | 50 | | | | | | 44 | 43 | 42 | | 40 | 39 | | | | | | 33 | | 31 | 30 | | | 27 | | | | 23 | | | 20 | | 18 | | | | | 13 | | | | | 8 | 7 | | 5 | | | 2 | 1 | 9-1438136-9 | 5L3T-14A464-DA-056 |
| | | | | | | 65 | 64 | 63 | 62 | | | | | | 56 | | | | | | | | | | | | | | 42 | | 40 | 39 | | | | | | 33 | | | | | | 27 | | | | 23 | | 21 | 20 | | 18 | | | | | 13 | | | | | 8 | 7 | | | | 3 | 2 | 1 | 9-1438136-8 | 5L3T-14A464-DA-055 |
| TERMINAL HOLE POSITION | 70 | 69 | 68 | 67 | 66 | 65 | 64 | 63 | 62 | 61 | 60 | 59 | 58 | 57 | 56 | 55 | 54 | 53 | 52 | 51 | 50 | 49 | 48 | 47 | 46 | 45 | 44 | 43 | 42 | 41 | 40 | 39 | 38 | 37 | 36 | 35 | 34 | 33 | 32 | 31 | 30 | 29 | 28 | 27 | 26 | 25 | 24 | 23 | 22 | 21 | 20 | 19 | 18 | 17 | 16 | 15 | 14 | 13 | 12 | 11 | 10 | 9 | 8 | 7 | 6 | 5 | 4 | 3 | 2 | 1 | ASSEMBLY PART NUMBER | FORD PART NUMBER |

5L3T-14A464-D* PIN-OUT CHART

THIS DRAWING IS A CONTROLLED DOCUMENT.

DIMENSIONS: mm

TOLERANCES UNLESS OTHERWISE SPECIFIED:
0 PLC ±-
1 PLC ±0.3
2 PLC ±0.10
3 PLC ±-
4 PLC ±-
ANGLES ±1°

MATERIAL - -
FINISH - -

DWN R. VESTAL 15APR2005
CHK T. VALASEK 15APR2005
APVD T. VALASEK 15APR2005
PRODUCT SPEC -
APPLICATION SPEC -
WEIGHT -

TE Connectivity

NAME 70-WAY HARNESS ASSEMBLY

SIZE A1 | CAGE CODE 00779 | DRAWING NO C-1438136 | RESTRICTED TO -

CUSTOMER DRAWING | SCALE 2:1 | SHEET 4 OF 11 | REV G47

THIS DRAWING IS UNPUBLISHED. RELEASED FOR PUBLICATION 20
© COPYRIGHT 20 BY - ALL RIGHTS RESERVED.

| REVISIONS | | | | | |
|---|---|---|---|---|---|
| P | LTR | DESCRIPTION | DATE | DWN | APVD |
| | - | SEE SHEET 1 | - | - | - |

KEYING OPTION B

||||||||||||||||||||||||||||||||||||||||||||||||||||||||||||||||||||||||||
|---|---|---|---|---|---|---|---|---|---|---|---|---|---|---|---|---|---|---|---|---|---|---|---|---|---|---|---|---|---|---|---|---|---|---|---|---|---|---|---|---|---|---|---|---|---|---|---|---|---|---|---|---|---|---|---|---|---|---|---|---|---|---|---|---|---|---|---|---|---|---|---|---|
|||||||||63|||60||||||||||||49||||45||||||40|39|38||36||||32|31|||||||24||||20|19||17||15|14|13|12|11|10||||6|5|4|||1|2035383-4|5L3T-14A464-EA-047|
|||||||||63|||60||||||||||||49||||45||||||40|39|38||36||||32|31|||||||24||||20|19||17|16|15|14|13|12|11|10||||6|5|4|||1|2035383-3|5L3T-14A464-EA-046|
|||69|68||66|65|64|||||59||||55|54|53|52|51|50|49|48|47|||||||39|38|37||35|34|33|32|31|30|||||||||21|20|19|18||||14|||||||||5||||1|7-1456659-0|5L3T-14A464-EA-045|
||70|||||||||||||||||||50|49|48||||||||40|39|38||36||||32|31|||||||24|23|22||20|19|||16|15|14|13|12|11||9||7|6|5||||1|5-1456659-0|5L3T-14A464-EA-044|
|||||||||63|||60||||||||||||49||||45||||||40|39|38||36||||32|31|||||||24||||20|19|||16|15|14|13|12|11|10||||6|5|4|||1|4-1456659-6|5L3T-14A464-EA-043|
|||||||||63|||60||||||||||||49||||45||||||40|39|38||36||||32|31|||||||24||||20|19|||16|15|||12|11|10||||6|5|4|||1|4-1456659-0|5L3T-14A464-EA-042|
||||||||64||||60||||||||||||49|||||||42|41|||||||||32|31|||||||||||||||||16|15|14|13|12|||9|8||6|5|4|||1|3-1456659-0|5L3T-14A464-EA-041|
||70|||||65|||||||||||||53|||50|49|48||||||||40|39|38||36||||32|31|||||||24|23|22||20||18|17||15|14|13|12|11||9||7|6|5||||1|2-1456659-4|5L3T-14A464-EA-040|
||70|||||||||||||||||||50|49|48||||||||40|39|38||36||||32|31|||||||24|23|22||20||||16|15|14|13|12|11||9||7|6|5||||1|2-1456659-3|5L3T-14A464-EA-039|
||70|||||65||||||||||||||||49|48||||||||40|39|38||36||||32|31|||||||24|23|22||20||18|17||15|14|13|12|11||9||7|6|5|||||2-1456659-2|5L3T-14A464-EA-038|
||70|||||65||||||||||||||||50|49|48||||||||40|39|38||36||||32|31|||||||24|23|22||20||18|17||15|14|13|12|11||9||7|6|5||||1|2-1456659-1|5L3T-14A464-EA-037|
||||||||||||||||||||||||49|||||||42|41||39|38||||||32|31|||||||||||||||||16|15|14|13|12|||9|8||6|5|4|||1|1-1456659-7|5L3T-14A464-EA-036|
||||||||||||60||||||||||||49||||45||||||40|39|38||36||||32|31|||||||24||||20|19||||15|14|13|12|11|10||||6|5|4|||1|1-1456659-6|5L3T-14A464-EA-035|
||||||||||||||||||||||||49|||||||42|41||||||||||||||||||||||||||||||||||9|8||6|5|4|||1|1-1456659-5|5L3T-14A464-EA-034|
||||||||64||||60||||||||||||49|||||||42|41||39|38||||||||||||||||||||||||||||9|8||6|5|4|||1|1-1456659-4|5L3T-14A464-EA-033|
||||||||||||||||||||||||49|||||||42|41|||||||||32|31|||||||||||||||||16|15|14|13|12|||9|8||6|5|4|||1|1-1456659-3|5L3T-14A464-EA-032|
||70|||||65|||||||||||||53||||49|48||||||||40|39|38||36|||33|32|31|||||||24|23|22||20|19|18|17||15|14|13|12|11||9||7|6|5||||1|1-1456659-1|5L3T-14A464-EA-031|
||||||||64||||60||||||||||||49|||||||||||||37|36|35|||32|31|||||||||||||||||16|15|14|13|12|||9|||6|5|4|||1|1456659-7|5L3T-14A464-EA-030|
|||||||||63|||60||||||||||||49||||45||||||40|39|38||36||||32|31|||||||24||||20|19||||15|14|13|12|11|10||||6|5|4|||1|1456659-2|5L3T-14A464-EA-029|
||||||||||||||||||||||||49||||||43|42|41|||||||||||||||||||||||||||||||||9|8|7|6|5|4|||1|8-1438136-7|5L3T-14A464-EA-028|
||||||||64||||60||||||||||||49||||||43|42|41||39|38||||||||||||||||||||||||||||9|8|7|6|5|4|||1|8-1438136-6|5L3T-14A464-EA-027|
||||||||||||||||||||||||49||||||43|42|41|||||||||32|31|||||||||||||||||16|15|14|13|12|||9|8|7|6|5|4|||1|8-1438136-5|5L3T-14A464-EA-026|
|||||||||63|||60||||||||||||49||||45||||||40|39|38||36|35|||32|31|||||||24||||20|19||||15|14|13|12|11|10||||6|5|4|||1|8-1438136-0|5L3T-14A464-EA-025|
||||||||||||||||||||||||||||||45||||||40|39|38||36|35|||32|31|||||||24||||20|19||||15|14|13|12|11|10||||||4|||1|7-1438136-9|5L3T-14A464-EA-024|
||||||||64||||60||||||||||||49|||||||||||||37|36|35|||32|31|||||||24|||||||17|16|15|14|13|12|||9|||6|5|4|||1|7-1438136-6|5L3T-14A464-EA-023|
||70|||||65|||||||||||||53|||50|49|48||||||||40|39|38||36||||32|31|||||||24|23|22||20|19|18|17||15|14|13|12|11||9||7|6|5||||1|7-1438136-0|5L3T-14A464-EA-022|
||||||||||||60||||||||||||49||||45||||||40|39|38||36|35|||32|31|||||||24||||20|19||||15|14|13|12|11|10||||6|5|4|||1|6-1438136-1|5L3T-14A464-EA-021|
|||||||65|64||||60|||||||||||50|49|48|||||||||39|38|||||||||||||||||||20||||16|15|14|13|12|11|10|9|8|7|6|5|4|||1|5-1438136-4|5L3T-14A464-EA-020|
|||||||65||||||||||||||||50|49|48||||||||||||||||||||||||||||||20|||||||||11|10|9|8|7|6|5|4|||1|5-1438136-3|5L3T-14A464-EA-019|
|||||||65|64||||60|||||||||||50|49|48|||||||||39|38|||||||||||||||||||20|||||||||11|10|9|8|7|6|5|4|||1|5-1438136-2|5L3T-14A464-EA-018|
|||||||65||||||||||||||||50|49|48|||||||||||||||32|31|||||||||||20||||16|15|14|13|12|11|10|9|8|7|6|5|4|||1|5-1438136-1|5L3T-14A464-EA-017|
||70|||||||||||||||||||50|49|48||||||||40|39|38||36||||32|31|||||||24|23|22||20|19|||16|15|14|13|12|11|10|9||7|6|5||||1|5-1438136-0|5L3T-14A464-EA-016|
||70|||||65||||||||||||||||50|49|48||||||||40|39|38||36||||32|31|||||||24|23|22||20|19|18|17||15|14|13|12|11|10|9||7|6|5||||1|4-1438136-8|5L3T-14A464-EA-015|
||70|||||65||||||||||||||||50|49|48||||||||40|39|38||36||||32|31|||||||24|23|22||20|19|18|17||15|14|13|12|11||9||7|6|5||||1|4-1438136-7|5L3T-14A464-EA-014|
||70|||||65||||||||||||||||49|48||||||||40|39|38||36||||32|31|||||||24|23|22||20|19|18|17||15|14|13|12|11|10|9||7|6|5|||||4-1438136-6|5L3T-14A464-EA-013|
|||||||65|64||||60|||||||||||50|49|48|||||||||||||||32|31|||||||||||20||||16|15|14|13|12|11|10|9|8|7|6|5|4|||1|4-1438136-5|5L3T-14A464-EA-012|
|||||||65|64||||60|||||||||||50|49|48|||||||||39|38||||||32|31|||||||||||20||||16|15|14|13|12|11|10|9|8|7|6|5|4|||1|4-1438136-4|5L3T-14A464-EA-011|
|||||||65|64||||60|||||||||||50|49|48||||||||40|||||||33|32|31|||||||||||20|||17|16|15|14|13|12|11|10|9|8|7|6|5|4|||1|2-1438136-9|5L3T-14A464-EA-010|
|||||||65|64||||60|||||||||||50|49|48||||||||40|||||||33|||||||||||||20|||17||||||11|10|9|8|7|6|5|4|||1|2-1438136-8|5L3T-14A464-EA-009|
|||||||65|64||||60|||||||||||50|49|48||||||||40|39|38|||||33|32|31|||||||||||20|||17|16|15|14|13|12|11|10|9|8|7|6|5|4|||1|2-1438136-5|5L3T-14A464-EA-008|
|||||||65|64||||60|||||||||||50|49|48||||||||40|39|38|||||33|||||||||||||20|||17||||||11|10|9|8|7|6|5|4|||1|2-1438136-1|5L3T-14A464-EA-007|
|||||||65|64||||60|||||||||||50|49|48||||||||40|39|38|||||33|32|31|||||||||||20|||17|16|15|14|13|12|11|10|9|8|7|6|5|4|||1|2-1438136-0|5L3T-14A464-EA-006|
|||||||65|64||||60|||||||||||50|49|48|||45||||||40|39|38|||||33|32|31|||||||||||20|||17|16|15|14|13|12|11|10|9|8|7|6|5|4|||1|1-1438136-9|5L3T-14A464-EA-005|
|||||||65|64||||60|||||||||||50|49|48|||45||||||40|39|38|||||33|||||||||||||20|||17||||||11|10|9|8|7|6|5|4|||1|1-1438136-8|5L3T-14A464-EA-004|
|CAVITIES WITH A NUMERIC SYMBOL INDICATES CLOSED TERMINAL LOCATIONS||||||65|64||||60|||||||||||50|49|48||||||||40|39|38|||||33|||||||||||||20|||17||||||11|10|9|8|7|6|5|4|||1|1-1438136-7|5L3T-14A464-EA-003|
|||||||65|64||||60|||||||||||50|49|48||||||||40|39|38|||||33||||||||||||||||17||||||11|10|9|8|7|6|5|||||1-1438136-2|5L3T-14A464-EA-002|
|BLANK CAVITIES INDICATES OPEN TERMINAL HOLE LOCATIONS||||||65|64||||60|||||||||||50|49|48||||||||40|39|38|||||33||||||||||||||||17||||||11|10|9|8|7|6|5|4|||1|1-1438136-1|5L3T-14A464-EA-001|
||||||||||||||||||||||||||||||||||||||||||||||||||||||||||||||||||||||||1438136-2|5L3T-14A464-EA-000|
|TERMINAL HOLE POSITION|70|69|68|67|66|65|64|63|62|61|60|59|58|57|56|55|54|53|52|51|50|49|48|47|46|45|44|43|42|41|40|39|38|37|36|35|34|33|32|31|30|29|28|27|26|25|24|23|22|21|20|19|18|17|16|15|14|13|12|11|10|9|8|7|6|5|4|3|2|1|ASSEMBLY PART NUMBER|FORD PART NUMBER|

5L3T-14A464-E* PIN-OUT CHART

THIS DRAWING IS A CONTROLLED DOCUMENT.

DIMENSIONS: mm

TOLERANCES UNLESS OTHERWISE SPECIFIED:
0 PLC ±-
1 PLC ±0.3
2 PLC ±0.10
3 PLC ±-
4 PLC ±-
ANGLES ±1°

MATERIAL - -
FINISH - -

DWN R. VESTAL 15APR2005
CHK T. VALASEK 15APR2005
APVD T. VALASEK 15APR2005
PRODUCT SPEC -
APPLICATION SPEC -
WEIGHT -

TE Connectivity

NAME 70-WAY HARNESS ASSEMBLY

SIZE A1 | CAGE CODE 00779 | DRAWING NO C-1438136 | RESTRICTED TO -

CUSTOMER DRAWING | SCALE 2:1 | SHEET 5 OF 11 | REV G47

4805 (3/13)

THIS DRAWING IS UNPUBLISHED. RELEASED FOR PUBLICATION 20
© COPYRIGHT 20 BY - ALL RIGHTS RESERVED.

| REVISIONS | | | | | |
|---|---|---|---|---|---|
| P | LTR | DESCRIPTION | DATE | DWN | APVD |
| | - | SEE SHEET 1 | - | - | - |

## KEYING OPTION C

| | | | | | | | | | | | | | | | | | | | | | | | | | | | | | | | | | | | | | | | | | | | | | | | | | | | | | | | | | | | | | | | | | | | | | | | | |
|---|---|---|---|---|---|---|---|---|---|---|---|---|---|---|---|---|---|---|---|---|---|---|---|---|---|---|---|---|---|---|---|---|---|---|---|---|---|---|---|---|---|---|---|---|---|---|---|---|---|---|---|---|---|---|---|---|---|---|---|---|---|---|---|---|---|---|---|---|---|---|---|---|
| | 70 | | | | 66 | 65 | | | | | 60 | 59 | | | 56 | | | 53 | 52 | | | | 48 | 47 | 46 | 45 | 44 | | | | | | 38 | 37 | | | | | | 31 | 30 | 29 | 28 | | | 25 | 24 | | 22 | 21 | 20 | 19 | 18 | | | | | | 12 | | 10 | 9 | 8 | 7 | 6 | 5 | | | | | 9-2035383-8 | 8U5T-14A464-AA-042 |
| | 70 | 69 | 68 | 67 | | 65 | 64 | 63 | 62 | 61 | 60 | 59 | | | 56 | | | | | 51 | 50 | 49 | 48 | 47 | 46 | 45 | 44 | 43 | 42 | 41 | 40 | | | | 36 | | 34 | 33 | | 31 | 30 | 29 | 28 | 27 | 26 | 25 | 24 | 23 | 22 | 21 | 20 | | 18 | 17 | 16 | 15 | 14 | 13 | 12 | 11 | 10 | 9 | 8 | 7 | 6 | 5 | 4 | | 2 | 1 | 9-2035383-1 | 8U5T-14A464-AA-041 |
| | 70 | | | | 66 | 65 | | | | | 60 | 59 | | | 56 | | | 53 | 52 | | | | 48 | 47 | 46 | 45 | 44 | | | | | | 38 | | | | | | | 31 | 30 | 29 | 28 | | | 25 | 24 | | 22 | 21 | 20 | 19 | 18 | | | | | | 12 | | 10 | 9 | 8 | 7 | 6 | 5 | | | | | 8-2035383-3 | 8U5T-14A464-AA-040 |
| | 70 | | 68 | | 66 | 65 | | | | | 60 | 59 | | | 56 | | | 53 | | | | | 48 | 47 | 46 | 45 | 44 | | | | | | 38 | | | | | | | 31 | 30 | 29 | 28 | | | 25 | 24 | | 22 | 21 | 20 | 19 | | | | | | | 12 | | 10 | 9 | 8 | 7 | 6 | 5 | | | | | 6-2035383-5 | 8U5T-14A464-AA-039 |
| | | | | | | 65 | | | | | | | | | | | | | | | | | | | | | | | | | 40 | | 38 | | 36 | 35 | | | | 31 | 30 | 29 | | | | | | | | 21 | 20 | | | 17 | 16 | 15 | 14 | | 12 | 11 | | 9 | 8 | 7 | 6 | | | | | | 6-2035383-0 | 8U5T-14A464-AA-038 |
| | | | | | | 65 | | | | | | | | | | | | | | | | | | | | | | | | | 40 | | 38 | | 36 | 35 | | | | 31 | 30 | 29 | | | | | | | | 21 | 20 | | | 17 | 16 | | | | 12 | 11 | | 9 | 8 | 7 | 6 | | | | | | 5-2035383-8 | 8U5T-14A464-AA-037 |
| | | | | | | 65 | | | | | | | | | | | | | | | | | | | | | | | | | 40 | | 38 | | 36 | 35 | | | | | 30 | | | | | | | | 22 | 21 | 20 | | | 17 | 16 | 15 | 14 | | 12 | 11 | | 9 | 8 | 7 | 6 | | | | | | 5-2035383-3 | 8U5T-14A464-AA-036 |
| | | | | | | 65 | | | | | | | | | | | | | | | | | | | | | | | | | 40 | | 38 | | 36 | 35 | | | | 31 | 30 | 29 | | | | | | | 22 | 21 | 20 | | | 17 | 16 | 15 | 14 | | 12 | 11 | | 9 | 8 | 7 | 6 | | | | | | 4-2035383-3 | 8U5T-14A464-AA-035 |
| | | | | | | 65 | | | | | | | | | | | | | | | | | | | | | | | | | 40 | | 38 | | 36 | 35 | | | | 31 | 30 | 29 | | | | | | | 22 | 21 | 20 | | | 17 | 16 | 15 | 14 | | 12 | 11 | | 9 | 8 | | 6 | | | | | | 3-2035383-9 | 8U5T-14A464-AA-034 |
| | | | | | | 65 | | | | | | | | | | | | | | | | | | | | | | | | | 40 | | 38 | | 36 | 35 | | | | 31 | 30 | | | | | | | | 22 | 21 | 20 | | | 17 | 16 | 15 | 14 | | 12 | 11 | | 9 | 8 | 7 | 6 | | | | | | 2-2035383-3 | 8U5T-14A464-AA-033 |
| | | | | | | 65 | | | | | | | | | | | | | | | | | | | | | | | | | 40 | | 38 | | 36 | 35 | | | | 31 | 30 | | | | | | | | 22 | 21 | 20 | | | 17 | 16 | 15 | 14 | | 12 | 11 | | 9 | 8 | | 6 | | | | | | 2-2035383-1 | 8U5T-14A464-AA-032 |
| | | | | | | | | 63 | | | | | | | | | | 53 | 52 | | | 49 | 48 | | | | | | | | 40 | | | 37 | 36 | | | | 32 | | 30 | 29 | | | | | | | 22 | 21 | | | 18 | | 16 | | 14 | 13 | | | 10 | 9 | 8 | 7 | | | | | | | 2-2035383-0 | 8U5T-14A464-AA-031 |
| | | | | | | 65 | | | | | | | | | | | | | | | | | | | | | | | | | 40 | | 38 | | 36 | 35 | | | | 31 | 30 | | | | | | | | 22 | 21 | 20 | | | 17 | 16 | 15 | 14 | | 12 | 11 | | 9 | 8 | 7 | | | | | | | 1-2035383-7 | 8U5T-14A464-AA-030 |
| | | | | | | | | | | | 60 | 59 | 58 | 57 | | | | 53 | 52 | | | | | | | | 44 | | | | | | | | 36 | | | | | | | | 28 | | | | 24 | | | | | | | | | | | 13 | | 11 | | | 8 | 7 | | | | | | | 1-2035383-5 | 8U5T-14A464-AA-029 |
| | 70 | | 68 | | 66 | 65 | | | | | 60 | 59 | | | 56 | | | 53 | 52 | | | | 48 | 47 | 46 | 45 | 44 | | | | | | 38 | | | | | | | 31 | 30 | 29 | 28 | | | 25 | 24 | | 22 | 21 | 20 | 19 | 18 | | | | | 13 | 12 | | 10 | 9 | | 7 | 6 | 5 | | | | | 1-2035383-1 | 8U5T-14A464-AA-028 |
| | | | | | | | | 63 | | | | | | | | | | 53 | 52 | | | 49 | 48 | | | | | | | | 40 | | | 37 | 36 | | | | 32 | | 30 | 29 | | | | | | | 22 | 21 | | | 18 | | 16 | | 14 | 13 | | | 10 | 9 | 8 | 7 | 6 | | | | | | 2035383-6 | 8U5T-14A464-AA-027 |
| | | | | | | | | 63 | | | | | | | | | | 53 | 52 | | | 49 | 48 | | | | | | | | 40 | | | 37 | 36 | | | | 32 | | 30 | 29 | | | | | | | | 21 | | | 18 | | 16 | | 14 | 13 | | | 10 | 9 | 8 | 7 | 6 | | | | | | 2035383-5 | 8U5T-14A464-AA-026 |
| | | | 68 | 67 | | | | | 62 | 61 | | | | | | | | 53 | 52 | | | 49 | | | | | | 43 | | | | | | 37 | 36 | | | | 32 | | 30 | 29 | 28 | | | | | | 22 | | | | 18 | | 16 | | 14 | 13 | | | 10 | 9 | 8 | 7 | 6 | | | | | | 9-1456659-9 | 8U5T-14A464-AA-025 |
| | | | 68 | | | 65 | | | 62 | 61 | | | | | | 55 | | 53 | | | | 49 | 48 | | | | | 43 | | 41 | | 39 | | | | 35 | | 33 | 32 | | 30 | 29 | 28 | 27 | | 25 | 24 | | | 21 | 20 | | 18 | 17 | 16 | | 14 | 13 | 12 | | 10 | 9 | | 7 | 6 | 5 | | | | | 8-1456659-6 | 8U5T-14A464-AA-024 |
| | | | | | | 65 | | | | | | | | | | | | | 52 | | | | 48 | 47 | 46 | 45 | 44 | | | | | | 38 | | | | | | | 31 | 30 | 29 | 28 | | | | | | 22 | 21 | 20 | | 18 | | | | | 13 | | | | 9 | 8 | 7 | | | | | | | 8-1456659-5 | 8U5T-14A464-AA-023 |
| | | | | | | 65 | | | | | | | | | | | | | 52 | | | | 48 | 47 | | | | | | | 40 | | 38 | | 36 | 35 | | | | 31 | 30 | 29 | | | | | | | 22 | 21 | 20 | | 18 | 17 | 16 | 15 | 14 | 13 | 12 | 11 | | 9 | 8 | 7 | 6 | | | | | | 7-1456659-3 | 8U5T-14A464-AA-022 |
| | | | | | | 65 | | | | | | | | | | | | | 52 | | | | 48 | 47 | | | | | | | 40 | | 38 | | 36 | 35 | | | | 31 | 30 | 29 | | | | | | | 22 | 21 | 20 | | 18 | 17 | 16 | 15 | 14 | 13 | 12 | 11 | | 9 | 8 | | | | | | | | 6-1456659-4 | 8U5T-14A464-AA-021 |
| | | | | | | 65 | | | | | | | | | | | | 53 | 52 | | | | 48 | 47 | 46 | 45 | 44 | | | | | | 38 | 37 | | | | | | 31 | 30 | 29 | 28 | 27 | 26 | 25 | 24 | 23 | 22 | 21 | 20 | | 18 | | | | | 13 | | | 10 | | | 7 | | | | | | | 5-1456659-5 | 8U5T-14A464-AA-020 |
| | | | 68 | 67 | | | | 63 | 62 | 61 | | | | | | | | 53 | 52 | | | 49 | 48 | | | | | 43 | | | 40 | | | 37 | 36 | | | | 32 | | 30 | 29 | 28 | | | | | | 22 | 21 | | | 18 | | 16 | | 14 | 13 | | | 10 | 9 | 8 | 7 | 6 | | | | | | 5-1456659-3 | 8U5T-14A464-AA-019 |
| | | | | | | 65 | | | | | | | | | | | | 53 | 52 | | | | 48 | 47 | 46 | 45 | 44 | | | | | | 38 | 37 | | | | | | 31 | 30 | 29 | 28 | 27 | 26 | 25 | 24 | 23 | 22 | 21 | 20 | | 18 | | | | | 13 | | | 10 | | | 7 | 6 | | | | | | 4-1456659-5 | 8U5T-14A464-AA-018 |
| | | | 68 | | | 65 | | | 62 | 61 | | | | | | 55 | | 53 | | | | 49 | 48 | | | | | 43 | | 41 | | 39 | | | | 35 | | 33 | 32 | | 30 | 29 | 28 | 27 | | 25 | 24 | | 22 | 21 | 20 | | 18 | 17 | 16 | | 14 | 13 | 12 | | 10 | 9 | | 7 | 6 | 5 | | | | | 4-1456659-4 | 8U5T-14A464-AA-017 |
| | 70 | | 68 | | 66 | 65 | | | | | 60 | 59 | | | 56 | | | 53 | 52 | | | | 48 | 47 | 46 | 45 | 44 | | | | | | 38 | 37 | | | | | | 31 | 30 | 29 | 28 | 27 | 26 | 25 | 24 | 23 | 22 | 21 | 20 | 19 | 18 | | | | | 13 | 12 | | 10 | 9 | | 7 | 6 | 5 | | | | | 4-1456659-3 | 8U5T-14A464-AA-016 |
| | 70 | | 68 | | 66 | 65 | | | | | 60 | 59 | | | 56 | | | 53 | 52 | | | | 48 | 47 | 46 | 45 | 44 | | | | | | 38 | | | | | | | 31 | 30 | 29 | 28 | | | 25 | 24 | | 22 | 21 | 20 | 19 | 18 | | | | | 13 | 12 | | 10 | 9 | 8 | 7 | 6 | 5 | | | | | 4-1456659-2 | 8U5T-14A464-AA-015 |
| | | | 68 | 67 | | | | 63 | 62 | 61 | | | | | | | | 53 | 52 | | | 49 | 48 | | | | | 43 | | | 40 | 39 | 38 | 37 | 36 | | | | 32 | | 30 | 29 | 28 | | 26 | 25 | 24 | 23 | 22 | 21 | | | 18 | | 16 | | 14 | 13 | | | 10 | 9 | 8 | 7 | | | | | | | 3-1456659-9 | 8U5T-14A464-AA-014 |
| | | | 68 | 67 | | | | | 62 | 61 | | | | | | | | 53 | 52 | | | 49 | | | | | | 43 | | | | 39 | 38 | 37 | 36 | | | | 32 | | 30 | 29 | 28 | | 26 | 25 | 24 | 23 | 22 | | | | 18 | | 16 | | 14 | 13 | | | 10 | 9 | 8 | | | | | | | | 3-1456659-7 | 8U5T-14A464-AA-013 |
| | | | 68 | 67 | | | | | 62 | 61 | | | | | | | | 53 | 52 | | | 49 | | | | | | 43 | | | | | | 37 | 36 | | | | 32 | | 30 | 29 | 28 | | | | | | 22 | | | | 18 | | 16 | | 14 | 13 | | | 10 | 9 | 8 | | | | | | | | 3-1456659-6 | 8U5T-14A464-AA-012 |
| | | | | | | | | 63 | | | | | | | | | | 53 | 52 | | | 49 | 48 | | | | | | | | 40 | | | 37 | 36 | | | | 32 | | 30 | 29 | | | | | | | | 21 | | | 18 | | 16 | | 14 | 13 | | | 10 | 9 | 8 | | 6 | | | | | | 3-1456659-5 | 8U5T-14A464-AA-011 |
| | | | | | | | | 63 | | | | | | | | | | 53 | 52 | | | 49 | 48 | | | | | | | | 40 | | | 37 | 36 | | | | | | 30 | 29 | | | | | | | | 21 | | | 18 | | 16 | | 14 | 13 | | | 10 | 9 | 8 | | 6 | | | | | | 3-1456659-3 | 8U5T-14A464-AA-010 |
| | | | | | | | | 63 | | | | | | | | | | 53 | 52 | | | 49 | 48 | | | | | | | | 40 | | | 37 | 36 | | | | 32 | | 30 | 29 | | | | | | | 22 | 21 | | | 18 | | 16 | | 14 | 13 | | | 10 | 9 | 8 | | 6 | | | | | | 3-1456659-2 | 8U5T-14A464-AA-009 |
| | | | 68 | 67 | | 65 | | | 62 | 61 | | | | | | 55 | | 53 | | | | 49 | 48 | | | | | 43 | | 41 | | 39 | 38 | | | 35 | | 33 | 32 | 31 | 30 | 29 | 28 | 27 | 26 | 25 | 24 | 23 | 22 | 21 | 20 | | 18 | 17 | 16 | | 14 | 13 | 12 | | 10 | 9 | | 7 | 6 | 5 | | | | | 1-1456659-0 | 8U5T-14A464-AA-008 |
| | | | 68 | 67 | | 65 | | | 62 | 61 | | | | | | 55 | | 53 | | | | 49 | 48 | | | | | 43 | | 41 | | 39 | 38 | | | 35 | | 33 | 32 | 31 | 30 | 29 | 28 | 27 | 26 | | 24 | 23 | | 21 | 20 | | 18 | 17 | 16 | | 14 | 13 | 12 | | 10 | 9 | | 7 | 6 | 5 | | | | | 1456659-9 | 8U5T-14A464-AA-007 |
| | | | 68 | 67 | | 65 | | | 62 | 61 | | | | | | 55 | | 53 | | | | 49 | 48 | | | | | 43 | | 41 | | 39 | 38 | | | 35 | | 33 | 32 | 31 | 30 | 29 | 28 | 27 | 26 | 25 | 24 | 23 | 22 | 21 | 20 | 19 | 18 | 17 | 16 | | 14 | 13 | 12 | | 10 | 9 | | 7 | 6 | 5 | | | | | 1456659-6 | 8U5T-14A464-AA-006 |
| | | | | | | | 64 | 63 | | | | | | | | | | | | | | 49 | 48 | | | | | | | | 40 | | | 37 | 36 | | | | | | 30 | 29 | | | | | | | | 21 | | | 18 | | 16 | | 14 | 13 | | | 10 | 9 | 8 | | 6 | | | | | | 1456659-5 | 8U5T-14A464-AA-005 |
| | | | | | | | | 63 | | | | | | | | | | | | | | 49 | 48 | | | | | | | | 40 | | | 37 | 36 | | | | | | 30 | 29 | | | | | | | | 21 | | | 18 | | 16 | | 14 | 13 | | | 10 | 9 | 8 | | 6 | | | | | | 1456659-4 | 8U5T-14A464-AA-004 |
| CAVITIES WITH A NUMERIC SYMBOL INDICATES CLOSED TERMINAL LOCATIONS | | | 68 | 67 | | 65 | | | 62 | 61 | | | | | | 55 | | 53 | | | | 49 | 48 | | | | | 43 | | 41 | | 39 | 38 | | | 35 | | 33 | 32 | 31 | 30 | 29 | 28 | 27 | 26 | | 24 | 23 | | 21 | 20 | 19 | 18 | 17 | 16 | | 14 | 13 | 12 | | 10 | 9 | | 7 | 6 | 5 | | | | | 9-1438136-7 | 8U5T-14A464-AA-003 |
| | | | 68 | | 66 | 65 | | | 62 | 61 | | | | | 56 | 55 | | 53 | | | | 49 | 48 | | | | | 43 | | 41 | | 39 | 38 | | | 35 | | 33 | 32 | 31 | 30 | 29 | 28 | 27 | 26 | 25 | 24 | 23 | | 21 | 20 | 19 | 18 | 17 | | | 14 | 13 | 12 | | 10 | 9 | | | | 5 | | | | | 9-1438136-4 | 8U5T-14A464-AA-002 |
| BLANK CAVITIES INDICATES OPEN TERMINAL HOLE LOCATIONS | 70 | 69 | | | | | | 63 | | | | | | | | | | | | | | 49 | 48 | | | | | | | | 40 | | | 37 | 36 | | | | | | 30 | 29 | | | | | | | | 21 | | | 18 | | 16 | | 14 | 13 | | | 10 | 9 | 8 | | 6 | | | | | | 9-1438136-3 | 8U5T-14A464-AA-001 |
| | | | | | | | | | | | | | | | | | | | | | | | | | | | | | | | | | | | | | | | | | | | | | | | | | | | | | | | | | | | | | | | | | | | | | | | 1438136-3 | 8U5T-14A464-AA-000 |
| TERMINAL HOLE POSITION | 70 | 69 | 68 | 67 | 66 | 65 | 64 | 63 | 62 | 61 | 60 | 59 | 58 | 57 | 56 | 55 | 54 | 53 | 52 | 51 | 50 | 49 | 48 | 47 | 46 | 45 | 44 | 43 | 42 | 41 | 40 | 39 | 38 | 37 | 36 | 35 | 34 | 33 | 32 | 31 | 30 | 29 | 28 | 27 | 26 | 25 | 24 | 23 | 22 | 21 | 20 | 19 | 18 | 17 | 16 | 15 | 14 | 13 | 12 | 11 | 10 | 9 | 8 | 7 | 6 | 5 | 4 | 3 | 2 | 1 | ASSEMBLY PART NUMBER | FORD PART NUMBER |

8U5T-14A464-A* PIN-OUT CHART

THIS DRAWING IS A CONTROLLED DOCUMENT.

DIMENSIONS: mm

TOLERANCES UNLESS OTHERWISE SPECIFIED:
0 PLC ±-
1 PLC ±0.3
2 PLC ±0.10
3 PLC ±-
4 PLC ±-
ANGLES ±1°

MATERIAL - -
FINISH - -

DWN R. VESTAL 15APR2005
CHK T. VALASEK 15APR2005
APVD T. VALASEK 15APR2005
PRODUCT SPEC -
APPLICATION SPEC -
WEIGHT -

TE Connectivity

NAME: 70-WAY HARNESS ASSEMBLY

SIZE A1 | CAGE CODE 00779 | DRAWING NO C-1438136 | RESTRICTED TO -

CUSTOMER DRAWING | SCALE 2:1 | SHEET 6 OF 11 | REV G47

THIS DRAWING IS UNPUBLISHED. RELEASED FOR PUBLICATION 20
© COPYRIGHT 20 BY - ALL RIGHTS RESERVED.

REVISIONS

| P | LTR | DESCRIPTION | DATE | DWN | APVD |
|---|---|---|---|---|---|
| | - | SEE SHEET 1 | - | - | - |

KEYING OPTION D

| TERMINAL HOLE POSITION | ASSEMBLY PART NUMBER | FORD PART NUMBER |
|---|---|---|
| 57 55 51 49 43 36 35 33 30 27 25 24 23 22 18 17 15 11 10 9 8 6 3 2 1 | 3-2035383-0 | 8U5T-14A464-BA-056 |
| 56 55 54 52 51 49 39 36 35 34 33 31 27 26 25 24 23 22 18 17 15 12 9 4 1 | 2-2035383-9 | 8U5T-14A464-BA-055 |
| 55 54 51 49 41 36 35 34 33 30 27 26 24 23 22 18 17 15 11 9 8 6 4 3 2 1 | 2-2035383-7 | 8U5T-14A464-BA-054 |
| 64 63 55 54 51 49 48 41 36 33 30 27 26 25 24 23 18 15 9 4 | 2-2035383-5 | 8U5T-14A464-BA-053 |
| 57 56 55 54 51 49 39 36 35 33 27 26 25 24 23 22 17 15 12 10 9 8 5 4 1 | 2-2035383-4 | 8U5T-14A464-BA-052 |
| 57 56 55 54 51 49 39 36 35 33 27 26 25 24 23 22 17 15 12 11 10 9 8 6 5 4 3 1 | 1-2035383-9 | 8U5T-14A464-BA-051 |
| 64 63 55 54 51 49 48 41 36 33 30 27 26 25 18 15 9 4 | 1-2035383-8 | 8U5T-14A464-BA-050 |
| 57 55 54 49 43 41 39 35 33 30 26 24 23 22 17 15 11 10 9 8 6 5 4 3 2 1 | 1-2035383-3 | 8U5T-14A464-BA-049 |
| 57 55 54 51 49 43 41 39 36 35 33 30 27 26 25 24 23 22 17 15 11 10 9 8 6 5 4 3 2 1 | 1-2035383-2 | 8U5T-14A464-BA-048 |
| 57 55 54 49 41 40 39 33 30 27 26 25 18 17 15 11 10 9 8 6 5 3 2 1 | 2035383-9 | 8U5T-14A464-BA-047 |
| 64 63 55 54 51 49 48 41 36 33 30 27 26 25 18 15 9 4 2 | 2035383-7 | 8U5T-14A464-BA-046 |
| 57 56 55 54 51 49 39 36 35 33 27 26 25 24 23 22 17 12 11 10 9 8 6 5 4 3 1 | 2035383-1 | 8U5T-14A464-BA-045 |
| 55 54 49 39 33 30 27 26 25 18 17 15 11 10 9 8 6 5 3 2 1 | 9-1456659-8 | 8U5T-14A464-BA-044 |
| 56 55 54 52 51 49 39 36 35 34 33 31 27 26 25 24 23 18 17 15 12 11 10 9 8 6 5 4 3 1 | 9-1456659-6 | 8U5T-14A464-BA-043 |
| 57 55 54 53 51 49 37 33 32 30 27 26 25 24 23 22 19 17 16 15 12 9 7 3 2 1 | 9-1456659-3 | 8U5T-14A464-BA-042 |
| 57 55 54 53 52 51 49 37 33 32 31 30 27 25 24 23 22 19 17 16 15 12 9 7 3 1 | 9-1456659-1 | 8U5T-14A464-BA-041 |
| 57 55 54 51 49 43 39 36 35 33 30 27 26 25 22 18 17 15 11 10 9 8 6 4 3 2 1 | 8-1456659-9 | 8U5T-14A464-BA-040 |
| 57 55 54 51 49 43 39 36 35 33 27 26 25 24 23 22 18 17 15 11 10 9 8 6 4 3 2 1 | 8-1456659-8 | 8U5T-14A464-BA-039 |
| 57 55 54 53 51 49 37 35 34 33 32 30 27 26 25 24 23 22 19 18 17 16 15 12 9 8 7 3 2 1 | 8-1456659-7 | 8U5T-14A464-BA-038 |
| 57 55 54 51 49 43 39 36 35 33 30 27 26 25 24 23 22 18 17 15 11 10 9 8 6 4 3 2 1 | 8-1456659-4 | 8U5T-14A464-BA-037 |
| 57 55 54 49 39 33 30 27 26 25 24 23 18 17 15 11 10 9 8 6 5 3 2 1 | 8-1456659-3 | 8U5T-14A464-BA-036 |
| 57 55 54 49 39 33 30 27 26 25 18 17 15 11 10 9 8 6 5 3 2 1 | 8-1456659-2 | 8U5T-14A464-BA-035 |
| 57 55 54 49 41 40 39 33 30 26 25 18 17 15 11 10 9 8 6 5 3 2 1 | 8-1456659-1 | 8U5T-14A464-BA-034 |
| 56 55 54 51 49 39 36 35 34 33 31 26 25 24 23 18 17 15 12 9 4 1 | 8-1456659-0 | 8U5T-14A464-BA-033 |
| 56 55 54 52 51 49 39 36 35 34 33 31 27 26 25 24 23 18 17 15 12 9 4 1 | 7-1456659-9 | 8U5T-14A464-BA-032 |
| 56 55 54 52 51 49 39 36 35 34 33 31 27 26 25 24 23 18 17 15 12 11 10 9 8 6 4 3 1 | 7-1456659-8 | 8U5T-14A464-BA-031 |
| 57 56 55 54 51 49 39 36 35 33 27 26 25 24 23 22 18 17 11 10 9 8 6 5 4 3 7-1456659-7 | | 8U5T-14A464-BA-030 |
| 57 55 54 51 49 43 39 36 35 33 27 26 25 24 23 22 17 15 11 10 9 8 6 5 4 3 2 1 | 7-1456659-6 | 8U5T-14A464-BA-029 |
| 57 55 54 51 49 43 39 36 35 33 30 27 26 25 24 23 22 17 15 11 10 9 8 6 5 4 3 2 1 | 7-1456659-5 | 8U5T-14A464-BA-028 |
| 57 55 54 51 43 39 36 35 33 27 26 25 24 23 22 18 17 15 11 10 9 8 6 5 4 3 2 1 | 7-1456659-4 | 8U5T-14A464-BA-027 |
| 57 55 54 53 51 49 37 33 32 30 27 26 25 24 23 22 19 17 16 15 12 9 7 2 1 | 7-1456659-2 | 8U5T-14A464-BA-026 |
| 57 55 54 53 51 49 37 33 32 30 27 26 25 24 23 22 19 17 16 15 12 9 7 5 1 | 6-1456659-9 | 8U5T-14A464-BA-025 |
| 57 56 54 51 49 39 36 35 33 30 27 26 25 24 23 22 17 15 12 11 10 9 8 6 5 4 3 1 | 6-1456659-8 | 8U5T-14A464-BA-024 |
| 57 55 51 49 43 39 36 35 33 30 27 26 25 24 23 22 17 11 10 9 8 6 5 3 2 1 | 6-1456659-7 | 8U5T-14A464-BA-023 |
| 57 56 55 54 51 49 39 36 35 33 27 26 25 24 23 22 17 12 11 10 9 8 6 5 3 1 | 6-1456659-6 | 8U5T-14A464-BA-022 |
| 57 55 54 51 43 39 36 35 33 27 26 25 24 23 22 18 17 15 11 10 9 8 6 5 4 3 2 1 | 6-1456659-5 | 8U5T-14A464-BA-021 |
| 56 55 54 51 49 39 36 35 34 33 31 26 25 24 23 18 17 15 12 9 1 | 6-1456659-3 | 8U5T-14A464-BA-020 |
| 57 55 54 53 52 51 49 37 33 32 31 30 27 25 24 23 22 19 17 16 15 12 9 7 1 | 6-1456659-2 | 8U5T-14A464-BA-019 |
| 56 55 54 52 51 49 39 36 35 34 33 31 27 26 25 24 23 18 17 15 12 9 1 | 6-1456659-1 | 8U5T-14A464-BA-018 |
| 56 55 54 51 49 39 36 35 34 33 31 26 25 24 23 18 17 15 12 9 1 | 6-1456659-0 | 8U5T-14A464-BA-017 |
| 57 55 54 51 49 43 39 36 35 33 30 27 26 25 24 23 22 17 15 11 10 9 8 6 5 3 2 1 | 5-1456659-2 | 8U5T-14A464-BA-016 |
| 57 55 54 51 49 43 39 36 35 33 27 26 25 24 23 22 17 15 11 10 9 8 6 5 3 2 1 | 5-1456659-1 | 8U5T-14A464-BA-015 |
| 57 55 54 53 52 51 49 37 33 32 31 30 27 25 24 23 22 19 17 16 15 12 9 7 5 1 | 4-1456659-1 | 8U5T-14A464-BA-014 |
| 57 56 54 52 51 49 39 36 35 33 31 30 27 26 25 24 23 22 17 15 12 11 10 9 8 6 4 3 2 1 | 2-1456659-8 | 8U5T-14A464-BA-013 |
| 57 56 54 51 49 39 36 35 33 30 27 26 25 24 23 22 17 15 12 11 10 9 8 6 4 3 1 | 2-1456659-7 | 8U5T-14A464-BA-012 |
| 57 55 54 53 51 49 37 33 32 30 27 26 25 24 23 22 19 17 16 15 12 9 7 5 1 | 2-1456659-6 | 8U5T-14A464-BA-011 |
| 57 55 54 51 49 43 39 36 35 33 30 27 26 25 24 23 22 17 15 11 9 8 6 5 3 2 1 | 2-1456659-5 | 8U5T-14A464-BA-010 |
| 57 55 54 53 51 49 37 36 35 33 32 30 27 26 25 24 23 22 19 18 17 16 15 12 9 8 7 3 2 | 1-1456659-2 | 8U5T-14A464-BA-009 |
| 57 56 55 54 51 49 39 36 35 33 27 26 25 24 23 22 18 17 11 10 9 8 6 5 3 1456659-8 | | 8U5T-14A464-BA-008 |
| 57 56 55 54 51 49 39 36 35 33 30 27 26 25 24 23 22 18 17 11 10 9 8 6 5 3 1456659-1 | | 8U5T-14A464-BA-007 |
| 59 57 56 55 54 51 49 43 39 36 35 33 27 26 25 24 22 18 17 10 9 8 6 5 3 9-1438136-5 | | 8U5T-14A464-BA-006 |
| 57 56 54 51 49 39 36 35 33 30 27 26 25 24 23 22 17 15 12 11 10 9 8 7 6 4 3 1 | 9-1438136-2 | 8U5T-14A464-BA-005 |
| 57 56 54 52 51 49 39 36 35 33 31 30 27 26 25 24 23 22 17 15 12 11 10 9 8 7 6 4 3 2 1 | 9-1438136-1 | 8U5T-14A464-BA-004 |
| CAVITIES WITH A NUMERIC SYMBOL INDICATES CLOSED TERMINAL LOCATIONS: 57 56 54 51 49 39 36 35 33 30 27 26 25 24 23 22 17 15 12 11 10 9 8 7 6 5 3 1 | 9-1438136-0 | 8U5T-14A464-BA-003 |
| 57 56 54 52 51 49 39 36 35 33 31 30 27 26 25 24 23 22 17 15 12 11 10 9 8 7 6 5 3 2 1 | 8-1438136-9 | 8U5T-14A464-BA-002 |
| BLANK CAVITIES INDICATES OPEN TERMINAL HOLE LOCATIONS: 57 56 54 53 51 49 39 37 36 35 34 33 30 27 26 25 24 23 22 18 17 16 15 14 12 11 10 9 8 7 6 4 3 1 | 8-1438136-4 | 8U5T-14A464-BA-001 |
| HOLE LOCATIONS: | 1438136-4 | 8U5T-14A464-BA-000 |

8U5T-14A464-B* PIN-OUT CHART

THIS DRAWING IS A CONTROLLED DOCUMENT.

DIMENSIONS: mm

TOLERANCES UNLESS OTHERWISE SPECIFIED:
0 PLC ±-
1 PLC ±0.3
2 PLC ±0.10
3 PLC ±-
4 PLC ±-
ANGLES ±1°

MATERIAL - -

FINISH - -

DWN R. VESTAL 15APR2005
CHK T. VALASEK 15APR2005
APVD T. VALASEK 15APR2005

PRODUCT SPEC -
APPLICATION SPEC -
WEIGHT -

TE Connectivity

NAME 70-WAY HARNESS ASSEMBLY

SIZE A1 | CAGE CODE 00779 | DRAWING NO C-1438136 | RESTRICTED TO -

CUSTOMER DRAWING | SCALE 2:1 | SHEET 7 OF 11 | REV G47

4805 (3/13)

THIS DRAWING IS UNPUBLISHED. RELEASED FOR PUBLICATION 20
© COPYRIGHT 20 BY - ALL RIGHTS RESERVED.

REVISIONS

| P | LTR | DESCRIPTION | DATE | DWN | APVD |
|---|---|---|---|---|---|
| | - | SEE SHEET 1 | - | - | - |

KEYING OPTION D

| TERMINAL HOLE POSITION | 70 | 69 | 68 | 67 | 66 | 65 | 64 | 63 | 62 | 61 | 60 | 59 | 58 | 57 | 56 | 55 | 54 | 53 | 52 | 51 | 50 | 49 | 48 | 47 | 46 | 45 | 44 | 43 | 42 | 41 | 40 | 39 | 38 | 37 | 36 | 35 | 34 | 33 | 32 | 31 | 30 | 29 | 28 | 27 | 26 | 25 | 24 | 23 | 22 | 21 | 20 | 19 | 18 | 17 | 16 | 15 | 14 | 13 | 12 | 11 | 10 | 9 | 8 | 7 | 6 | 5 | 4 | 3 | 2 | 1 | ASSEMBLY PART NUMBER | FORD PART NUMBER |
|---|---|---|---|---|---|---|---|---|---|---|---|---|---|---|---|---|---|---|---|---|---|---|---|---|---|---|---|---|---|---|---|---|---|---|---|---|---|---|---|---|---|---|---|---|---|---|---|---|---|---|---|---|---|---|---|---|---|---|---|---|---|---|---|---|---|---|---|---|---|---|---|---|---|---|
| | | | | | | | 64 | 63 | | | | | | 57 | | 55 | 54 | | | 51 | | 49 | 48 | | | | | 43 | | | | 39 | | | 36 | | | | | 30 | | | 27 | 26 | 25 | | | 22 | | | | | | 15 | | | | 11 | | 9 | 8 | | 6 | 5 | 4 | 3 | 2 | 1 | 9-2035383-7 | 8U5T-14A464-BA-107 |
| | | | | | | | 64 | | | | | | | 57 | | 55 | 54 | | | 51 | | 49 | 48 | | | | | 43 | | 41 | | 39 | | | 36 | 35 | | 33 | | 30 | | | | 26 | 25 | 24 | 23 | 22 | | | 18 | 17 | | 15 | | | | 11 | 10 | 9 | 8 | | 6 | 5 | 4 | 3 | | 1 | 9-2035383-4 | 8U5T-14A464-BA-106 |
| | | | | | | | 64 | | | | | | | 57 | | 55 | 54 | | | 51 | | 49 | 48 | | | | | | | 41 | | | | | 36 | 35 | | 33 | | 30 | | | | 26 | 25 | 24 | 23 | | | | 18 | 17 | | 15 | | | | | | 9 | | | | | 4 | 3 | | 1 | 9-2035383-2 | 8U5T-14A464-BA-105 |
| | | | | | | | | | | | | | | | 56 | 55 | 54 | | | 51 | | 49 | | | | | | | | | | 39 | | | 36 | 35 | | 33 | | | | | 27 | 26 | 25 | 24 | 23 | | | | | 17 | | 15 | | | 12 | 11 | 10 | 9 | 8 | | 6 | | 4 | 3 | | 1 | 9-2035383-0 | 8U5T-14A464-BA-104 |
| | | | | 66 | 65 | 64 | 63 | | | | | | | 57 | | | 54 | | | 51 | | 49 | 48 | | | | | 43 | | | | | | | 36 | | | | | 30 | | | | 26 | 25 | | | 22 | | 20 | | | | 15 | | | | 11 | 10 | | 8 | | 6 | 5 | | 3 | 2 | | 8-2035383-9 | 8U5T-14A464-BA-103 |
| | | | | | | | 64 | 63 | | | | | | 57 | | | 54 | | | 51 | | 49 | 48 | | | | | 43 | | | | 39 | 38 | | 36 | | | | | 30 | | | 27 | 26 | 25 | | | 22 | | | | | | 15 | | | | 11 | 10 | | 8 | | 6 | 5 | 4 | 3 | 2 | | 8-2035383-8 | 8U5T-14A464-BA-102 |
| | | | | | | | 64 | 63 | | | | | | 57 | | | | | | 51 | | 49 | 48 | | | | | 43 | | | | 39 | 38 | | 36 | | | | | 30 | | | 27 | 26 | 25 | | | 22 | | | | | | 15 | | | | 11 | 10 | | 8 | | 6 | 5 | 4 | | 2 | | 8-2035383-7 | 8U5T-14A464-BA-101 |
| | | | | 66 | | | 64 | 63 | | | | | | 57 | | | 54 | | | 51 | | 49 | 48 | | | | | 43 | | | | | 38 | | 36 | | | | | 30 | | | | 26 | 25 | | | | | 20 | | | | 15 | | | | 11 | 10 | | 8 | | 6 | 5 | | 3 | 2 | | 8-2035383-6 | 8U5T-14A464-BA-100 |
| | | | | | | | 64 | 63 | | | | | | 57 | | 55 | | | | 51 | | 49 | 48 | | | | | 43 | | | | 39 | | | 36 | | | | | 30 | | | 27 | 26 | 25 | | | 22 | | | | | | 15 | | | | 11 | 10 | 9 | 8 | | 6 | | 4 | | 2 | 1 | 8-2035383-5 | 8U5T-14A464-BA-099 |
| | | | | | | | 64 | | | | | | | 57 | | 55 | 54 | | | 51 | | 49 | 48 | | | | | | | 41 | | | | | 36 | 35 | 34 | 33 | | 30 | | | | 26 | 25 | 24 | 23 | | | | 18 | 17 | | 15 | | | | | | 9 | | | | | 4 | 3 | | 1 | 8-2035383-4 | 8U5T-14A464-BA-098 |
| | | | | | | | | | | | | | | | | 55 | 54 | | | 51 | | 49 | | | | | | | | 41 | | | | | 36 | 35 | 34 | 33 | | 31 | 30 | | | | 26 | 25 | 24 | 23 | | | | 18 | 17 | | 15 | | | | | | 9 | | | | | 4 | 3 | | 1 | 8-2035383-2 | 8U5T-14A464-BA-097 |
| | | | | | | | | | | | | | | | | 55 | 54 | | 52 | 51 | | 49 | | | | | | | | 41 | | | | | 36 | 35 | 34 | 33 | | 31 | 30 | | | | 26 | 25 | 24 | 23 | | | | 18 | 17 | | 15 | | | | | | 9 | | | | | 4 | 3 | | 1 | 8-2035383-1 | 8U5T-14A464-BA-096 |
| | | | | | | | 64 | 63 | | | | | | 57 | | 55 | | | | 51 | | 49 | 48 | | | | | 43 | | | | 39 | | | 36 | | | | | 30 | | | 27 | 26 | 25 | | | 22 | | | | | | 15 | | | | 11 | 10 | 9 | 8 | | 6 | 5 | 4 | | 2 | 1 | 8-2035383-0 | 8U5T-14A464-BA-095 |
| | | | | | | | 64 | 63 | | | | | | 57 | | 55 | | | | 51 | | 49 | 48 | | | | | 43 | | | | 39 | | | 36 | | | | | 30 | | | 27 | 26 | 25 | 24 | 23 | 22 | | | | | | 15 | | | | 11 | 10 | 9 | 8 | | 6 | | 4 | | 2 | 1 | 7-2035383-9 | 8U5T-14A464-BA-094 |
| | | | | | | | | | | | | | | 57 | | 55 | 54 | | | | | 49 | | | | | | 43 | | 41 | | 39 | | | | 35 | | 33 | | 30 | | | 27 | 26 | | 24 | 23 | 22 | | | | | | 15 | | | | 11 | 10 | 9 | 8 | | 6 | 5 | 4 | 3 | | 1 | 7-2035383-8 | 8U5T-14A464-BA-093 |
| | | | | | | | | | | | | | | 57 | | 55 | 54 | | | | | 49 | | | | | | 43 | | 41 | | 39 | | | | 35 | | 33 | | 30 | | | 27 | 26 | | 24 | 23 | 22 | | | | 17 | | 15 | | | | 11 | 10 | 9 | | | 6 | 5 | 4 | 3 | | 1 | 7-2035383-6 | 8U5T-14A464-BA-092 |
| | | | | | | | 64 | 63 | | | | | | 57 | | 55 | 54 | | | 51 | | 49 | 48 | | | | | | | 41 | | | | | 36 | | 34 | 33 | | 30 | | | 27 | 26 | 25 | | | | | | 18 | | | 15 | | | | | | 9 | | | | | 4 | 3 | | 1 | 7-2035383-5 | 8U5T-14A464-BA-091 |
| | | | | | | | 64 | 63 | | | | | | 57 | | 55 | 54 | | | 51 | | 49 | 48 | | | | | | | 41 | | | | | 36 | | 34 | 33 | | 30 | | | 27 | 26 | 25 | 24 | 23 | | | | 18 | | | 15 | | | | | | 9 | | | | | 4 | 3 | | 1 | 7-2035383-4 | 8U5T-14A464-BA-090 |
| | | | | | | | 64 | 63 | | | | | | 57 | | | | | | 51 | | 49 | 48 | | | | | 43 | | | | 39 | | | 36 | | | | | 30 | | | 27 | 26 | 25 | | | 22 | | | | | | 15 | | | | 11 | 10 | | 8 | | 6 | 5 | 4 | | 2 | | 7-2035383-3 | 8U5T-14A464-BA-089 |
| | | | | | | | 64 | 63 | | | | | | 57 | | | 54 | | | 51 | | 49 | 48 | | | | | 43 | | | | 39 | | | 36 | | | | | 30 | | | 27 | 26 | 25 | | | 22 | | | | | | 15 | | | | 11 | 10 | | 8 | | 6 | 5 | 4 | 3 | 2 | | 7-2035383-2 | 8U5T-14A464-BA-088 |
| | | | | | | | 64 | 63 | | | | | | 57 | | | 54 | | | 51 | | 49 | 48 | | | | | 43 | | | | | | | 36 | | | | | 30 | | | | 26 | 25 | | | 22 | | | | | | 15 | | | | 11 | 10 | | 8 | | 6 | 5 | | 3 | 2 | | 7-2035383-1 | 8U5T-14A464-BA-087 |
| | | | | | | | 64 | 63 | | | | | | 57 | | 55 | 54 | | | 51 | | 49 | 48 | | | | | 43 | | | | 39 | | | 36 | | | | | 30 | | | 27 | 26 | 25 | | | 22 | | | | | | 15 | | | | 11 | 10 | 9 | 8 | | 6 | 5 | 4 | 3 | 2 | | 7-2035383-0 | 8U5T-14A464-BA-086 |
| | | | | | | | 64 | 63 | | | | | | 57 | | 55 | 54 | | | 51 | | 49 | 48 | | | | | | | 41 | | | | | 36 | | | 33 | | 30 | | | 27 | 26 | | 24 | 23 | | | | 18 | | | 15 | | | | | | 9 | | | | | 4 | | | | 6-2035383-9 | 8U5T-14A464-BA-085 |
| | | | | | | | | | | | | | | 57 | | 55 | 54 | | | 51 | | 49 | | | | | | 43 | | | | 39 | | | 36 | 35 | | 33 | | 30 | | | 27 | 26 | 25 | | | 22 | | | | 17 | | 15 | | | | 11 | 10 | 9 | 8 | | 6 | 5 | 4 | 3 | 2 | 1 | 6-2035383-8 | 8U5T-14A464-BA-084 |
| | | | | | | | | | | | | | | 57 | | 55 | 54 | | | 51 | | 49 | | | | | | 43 | | 41 | | 39 | | | 36 | 35 | | 33 | | 30 | | | 27 | 26 | 25 | | | 22 | | | | 17 | | 15 | | | | 11 | 10 | 9 | 8 | | 6 | 5 | 4 | 3 | | 1 | 6-2035383-7 | 8U5T-14A464-BA-083 |
| | | | | | | | 64 | 63 | | | | | | 57 | | | 54 | 53 | | 51 | | 49 | 48 | | | | | 43 | | | | 39 | | | 36 | | | 33 | | 30 | | | 27 | 26 | 25 | | | 22 | | | 18 | | | 15 | 14 | | 11 | 10 | 9 | 8 | | 6 | 5 | 4 | 3 | 2 | 1 | 6-2035383-6 | 8U5T-14A464-BA-082 |
| | | | | | | | 64 | | | | | | | 57 | | 55 | 54 | | | 51 | | 49 | 48 | | | | | 43 | | 41 | | 39 | | | 36 | 35 | 34 | 33 | | 30 | | | | 26 | 25 | 24 | 23 | 22 | | | 18 | 17 | | 15 | | | | 11 | 10 | 9 | 8 | | 6 | 5 | 4 | 3 | | 1 | 6-2035383-4 | 8U5T-14A464-BA-081 |
| | | | | | | | 64 | 63 | | | | | | 57 | | | | | | 51 | | 49 | 48 | | | | | 43 | | | | 39 | | | 36 | | | | | 30 | | | 27 | 26 | 25 | | | 22 | | | | | | 15 | | | | 11 | 10 | 9 | 8 | | 6 | 5 | 4 | | 2 | | 6-2035383-3 | 8U5T-14A464-BA-080 |
| | | | | | | | 64 | 63 | | | | | | 57 | | 55 | | | | 51 | | 49 | 48 | | | | | 43 | | | | 39 | | | 36 | | | | | 30 | | | 27 | 26 | 25 | 24 | 23 | 22 | | | | | | 15 | | | | 11 | 10 | 9 | 8 | | 6 | | 4 | | 2 | | 6-2035383-2 | 8U5T-14A464-BA-079 |
| | | | | | | | 64 | 63 | | | | | | 57 | | | 54 | | | 51 | | 49 | 48 | | | | | 43 | | | | 39 | | | 36 | | | | | 30 | | | 27 | 26 | 25 | 24 | 23 | 22 | | | | | | 15 | | | | 11 | 10 | 9 | 8 | | 6 | 5 | 4 | 3 | 2 | | 6-2035383-1 | 8U5T-14A464-BA-078 |
| | | | | | | | 64 | | | | | | | 57 | | 55 | 54 | | | 51 | | 49 | 48 | | | | | 43 | | 41 | | 39 | | | 36 | | 34 | 33 | | 30 | | | | 26 | 25 | 24 | 23 | 22 | | | 18 | 17 | | 15 | | | | 11 | 10 | 9 | 8 | | 6 | 5 | 4 | 3 | | 1 | 5-2035383-9 | 8U5T-14A464-BA-077 |
| | | | | | | | 64 | 63 | | | | | | 57 | | 55 | | | | 51 | | 49 | 48 | | | | | 43 | | | | 39 | | | 36 | | | | | 30 | | | 27 | 26 | 25 | 24 | 23 | 22 | | | | | | 15 | | | | 11 | 10 | 9 | 8 | | 6 | 5 | 4 | | 2 | | 5-2035383-7 | 8U5T-14A464-BA-076 |
| | | | | | | | 64 | 63 | | | | | | 57 | | 55 | | | | 51 | | 49 | 48 | | | | | 43 | | | | 39 | | | 36 | | | | | 30 | | | 27 | 26 | 25 | | | 22 | | | | | | 15 | | | | 11 | 10 | 9 | 8 | | 6 | 5 | 4 | | 2 | | 5-2035383-6 | 8U5T-14A464-BA-075 |
| | | | | | | | | | | | | | | | 56 | 55 | 54 | | | 51 | | 49 | | | | | | | | | | 39 | | | 36 | 35 | | 33 | | | | | 27 | 26 | 25 | 24 | 23 | | | | | 17 | | 15 | | | 12 | 11 | 10 | 9 | 8 | | 6 | 5 | 4 | 3 | | 1 | 5-2035383-5 | 8U5T-14A464-BA-074 |
| | | | | | | | 64 | | | | | | | 57 | 56 | | 54 | | | 51 | | 49 | 48 | | | | | | | | | 39 | | | 36 | 35 | | 33 | | 30 | | | 27 | 26 | 25 | 24 | 23 | 22 | | | | 17 | | 15 | | | 12 | 11 | 10 | 9 | 8 | | 6 | 5 | 4 | 3 | | 1 | 5-2035383-4 | 8U5T-14A464-BA-073 |
| | | | | | | | | 63 | | | | | | 57 | | 55 | 54 | | | 51 | | | | | | | | 43 | | | | 39 | | | 36 | 35 | 34 | 33 | | | | | 27 | 26 | 25 | 24 | 23 | 22 | | | 18 | 17 | | 15 | | | | 11 | 10 | 9 | 8 | | 6 | | 4 | 3 | 2 | 1 | 5-2035383-1 | 8U5T-14A464-BA-072 |
| | | | | | | | 64 | 63 | | | | | | 57 | | 55 | | | | 51 | | 49 | 48 | | | | | 43 | | | | 39 | | | 36 | | | | | 30 | | | 27 | 26 | 25 | | | 22 | | | 18 | 17 | | 15 | | | | 11 | 10 | 9 | 8 | | 6 | 5 | 4 | | 2 | 1 | 5-2035383-0 | 8U5T-14A464-BA-071 |
| | | | | | | | 64 | 63 | | | | | | 57 | | 55 | 54 | | | 51 | | 49 | 48 | | | | | 43 | | 41 | | 39 | | | 36 | | | 33 | | 30 | | | 27 | 26 | 25 | | | 22 | | | | | | 15 | | | | 11 | 10 | 9 | 8 | | 6 | 5 | 4 | 3 | | 1 | 4-2035383-8 | 8U5T-14A464-BA-070 |
| | | | | | | | 64 | 63 | | | | | | 57 | | 55 | 54 | | | 51 | | 49 | 48 | | | | | 43 | | | | 39 | | | 36 | | | | | 30 | | | 27 | 26 | 25 | | | 22 | | | | | | 15 | | | | 11 | 10 | 9 | 8 | | 6 | 5 | 4 | 3 | 2 | 1 | 4-2035383-7 | 8U5T-14A464-BA-069 |
| | | | | | | | 64 | 63 | | | | | | 57 | | 55 | 54 | | | 51 | | 49 | 48 | | | | | 43 | | 41 | | 39 | | | 36 | | | | | 30 | | | 27 | 26 | 25 | | | 22 | | | | | | 15 | | | | 11 | 10 | 9 | 8 | | 6 | 5 | 4 | 3 | | 1 | 4-2035383-6 | 8U5T-14A464-BA-068 |
| | | | | | | | | 63 | | | | | | 57 | | 55 | 54 | | | 51 | | | | | | | | 43 | | | | 39 | | | 36 | 35 | | 33 | | | | | 27 | 26 | 25 | 24 | 23 | 22 | | | 18 | 17 | | 15 | | | | 11 | 10 | 9 | 8 | | 6 | 5 | 4 | 3 | 2 | 1 | 4-2035383-5 | 8U5T-14A464-BA-067 |
| | | | | | | | | 63 | | | | | | 57 | | 55 | 54 | | | 51 | | | | | | | | 43 | | | | 39 | | | 36 | 35 | | 33 | 32 | | | | 27 | 26 | 25 | 24 | 23 | 22 | | | 18 | 17 | | 15 | | | | 11 | 10 | 9 | 8 | | 6 | 5 | 4 | 3 | 2 | 1 | 4-2035383-2 | 8U5T-14A464-BA-066 |
| | | | | | | | 64 | 63 | | | | | | 57 | | 55 | 54 | | | 51 | | 49 | 48 | | | | | | | 41 | | | | | 36 | | | 33 | | 30 | | | 27 | 26 | 25 | | | | | | 18 | | | 15 | | | | | | 9 | | | | | 4 | | | | 4-2035383-1 | 8U5T-14A464-BA-065 |
| | | | | | | | 64 | 63 | | | | | | 57 | | 55 | | | | 51 | | | 48 | | | | | 43 | | | | 39 | | | 36 | | | | | 30 | | | 27 | 26 | 25 | | | 22 | | | 18 | 17 | | 15 | | | | 11 | 10 | 9 | 8 | | 6 | 5 | 4 | | 2 | 1 | 4-2035383-0 | 8U5T-14A464-BA-064 |
| | | | | | | | | | | | | | | 57 | | 55 | 54 | | | 51 | | 49 | | | | | | 43 | | 41 | | 39 | | | 36 | 35 | | 33 | | 30 | | | 27 | 26 | 25 | 24 | 23 | 22 | | | | 17 | | 15 | | | | 11 | 10 | 9 | 8 | | 6 | 5 | 4 | 3 | | 1 | 3-2035383-8 | 8U5T-14A464-BA-063 |
| | | | | | | | | | | | | | | 57 | | 55 | 54 | | | | | 49 | | | | | | 43 | | 41 | | 39 | | | | 35 | | 33 | | 30 | | | 27 | 26 | | 24 | 23 | 22 | | | | 17 | | 15 | | | | 11 | 10 | 9 | 8 | | 6 | 5 | 4 | 3 | | 1 | 3-2035383-7 | 8U5T-14A464-BA-062 |
| | | | | | | | | | | | | | | 57 | | 55 | 54 | | | 51 | | 49 | | | | | | 43 | | 41 | | 39 | | | 36 | 35 | | 33 | | 30 | | | 27 | 26 | 25 | 24 | 23 | | | | | 17 | | 15 | | | | | 10 | 9 | 8 | | 6 | 5 | 4 | 3 | | 1 | 3-2035383-5 | 8U5T-14A464-BA-061 |
| CAVITIES WITH A NUMERIC SYMBOL INDICATES CLOSED TERMINAL LOCATIONS | | | | | | | | | | | | | | 57 | | 55 | | | | 51 | | 49 | | | | | | 43 | | | | | | | 36 | 35 | | 33 | | 30 | | | 27 | | 25 | | | 22 | | | 18 | 17 | | 15 | | | | 11 | 10 | 9 | 8 | | 6 | | | 3 | 2 | 1 | 3-2035383-4 | 8U5T-14A464-BA-060 |
| | | | | | | | 64 | 63 | | | | | | 57 | | 55 | 54 | | | 51 | | 49 | 48 | | | | | | | 41 | | | | | 36 | | | 33 | | 30 | | | 27 | 26 | 25 | 24 | 23 | | | | 18 | | | 15 | | | | | | 9 | | | | | 4 | | | | 3-2035383-3 | 8U5T-14A464-BA-059 |
| BLANK CAVITIES INDICATES OPEN TERMINAL HOLE LOCATIONS | | | | | | | | 63 | | | | | | 57 | | 55 | | | | 51 | | 49 | | | | | | 43 | | | | 39 | | | 36 | 35 | | 33 | | 30 | | | 27 | 26 | 25 | | | 22 | | | 18 | 17 | | 15 | | | | 11 | 10 | 9 | 8 | | 6 | 5 | 4 | | 2 | 1 | 3-2035383-2 | 8U5T-14A464-BA-058 |
| | | | | | | | | 63 | | | | | | 57 | | 55 | | | | 51 | | 49 | | | | | | 43 | | | | 39 | | | 36 | 35 | | 33 | | 30 | | | 27 | 26 | 25 | 24 | 23 | 22 | | | 18 | 17 | | 15 | | | | 11 | 10 | 9 | 8 | | 6 | 5 | 4 | | 2 | 1 | 3-2035383-1 | 8U5T-14A464-BA-057 |

8U5T-14A464-B* PIN-OUT CHART

THIS DRAWING IS A CONTROLLED DOCUMENT.

DIMENSIONS: mm

TOLERANCES UNLESS OTHERWISE SPECIFIED:
0 PLC ±-
1 PLC ±0.3
2 PLC ±0.10
3 PLC ±-
4 PLC ±-
ANGLES ±1°

MATERIAL - -
FINISH - -

DWN R. VESTAL 15APR2005
CHK T. VALASEK 15APR2005
APVD T. VALASEK 15APR2005
PRODUCT SPEC -
APPLICATION SPEC -
WEIGHT -

TE Connectivity

NAME 70-WAY HARNESS ASSEMBLY

| SIZE | CAGE CODE | DRAWING NO | RESTRICTED TO |
|---|---|---|---|
| A1 | 00779 | C-1438136 | - |

CUSTOMER DRAWING | SCALE 2:1 | SHEET 8 OF 11 | REV G47

4805 (3/13)

THIS DRAWING IS UNPUBLISHED. RELEASED FOR PUBLICATION 20
© COPYRIGHT 20 BY - ALL RIGHTS RESERVED.

| REVISIONS | | | | | |
|---|---|---|---|---|---|
| P | LTR | DESCRIPTION | DATE | DWN | APVD |
| | - | SEE SHEET 1 | - | - | - |

## KEYING OPTION F

CAVITIES WITH A NUMERIC SYMBOL INDICATES CLOSED TERMINAL LOCATIONS

BLANK CAVITIES INDICATES OPEN TERMINAL HOLE LOCATIONS

### AU5T-14A464-C* PIN-OUT CHART

| TERMINAL HOLE POSITION | 70 | 69 | 68 | 67 | 66 | 65 | 64 | 63 | 62 | 61 | 60 | 59 | 58 | 57 | 56 | 55 | 54 | 53 | 52 | 51 | 50 | 49 | 48 | 47 | 46 | 45 | 44 | 43 | 42 | 41 | 40 | 39 | 38 | 37 | 36 | 35 | 34 | 33 | 32 | 31 | 30 | 29 | 28 | 27 | 26 | 25 | 24 | 23 | 22 | 21 | 20 | 19 | 18 | 17 | 16 | 15 | 14 | 13 | 12 | 11 | 10 | 9 | 8 | 7 | 6 | 5 | 4 | 3 | 2 | 1 | ASSEMBLY PART NUMBER | FORD PART NUMBER |
|---|---|---|---|---|---|---|---|---|---|---|---|---|---|---|---|---|---|---|---|---|---|---|---|---|---|---|---|---|---|---|---|---|---|---|---|---|---|---|---|---|---|---|---|---|---|---|---|---|---|---|---|---|---|---|---|---|---|---|---|---|---|---|---|---|---|---|---|---|---|---|---|---|
| | | | | | | | | | | | | | | | | | | 53 | 52 | | | | | | | | | | | | | | | 37 | 36 | | | | | | | | | | | | | | | | | | | 17 | | 15 | | | | | | | 8 | 7 | | | | | | | 3-2035383-6 | AU5T-14A464-CA-003 |
| | | | | | | | | | | | 60 | 59 | 58 | 57 | | | | 53 | 52 | | | | | | | | 44 | | | | | | | | 36 | | | | | | | | 28 | | | | 24 | | | | | | | | | | | | 13 | | 11 | | | 8 | 7 | | | | | | | 2-2035383-8 | AU5T-14A464-CA-002 |
| | | | | | | | | | | | | | | | | | | 53 | 52 | | | | | | | | | | | | | | | 37 | 36 | | | | | | | | | | | | | | | | | | | 17 | | 15 | | | | | | | | | | | | | | | 9-1456659-0 | AU5T-14A464-CA-001 |
| | | | | | | | | | | | | | | | | | | | | | | | | | | | | | | | | | | | | | | | | | | | | | | | | | | | | | | | | | | | | | | | | | | | | | | 1438136-6 | AU5T-14A464-CA-000 |

## KEYING OPTION E

CAVITIES WITH A NUMERIC SYMBOL INDICATES CLOSED TERMINAL LOCATIONS

BLANK CAVITIES INDICATES OPEN TERMINAL HOLE LOCATIONS

### AU5T-14A464-U* PIN-OUT CHART

| TERMINAL HOLE POSITION | 70 | 69 | 68 | 67 | 66 | 65 | 64 | 63 | 62 | 61 | 60 | 59 | 58 | 57 | 56 | 55 | 54 | 53 | 52 | 51 | 50 | 49 | 48 | 47 | 46 | 45 | 44 | 43 | 42 | 41 | 40 | 39 | 38 | 37 | 36 | 35 | 34 | 33 | 32 | 31 | 30 | 29 | 28 | 27 | 26 | 25 | 24 | 23 | 22 | 21 | 20 | 19 | 18 | 17 | 16 | 15 | 14 | 13 | 12 | 11 | 10 | 9 | 8 | 7 | 6 | 5 | 4 | 3 | 2 | 1 | ASSEMBLY PART NUMBER | FORD PART NUMBER |
|---|---|---|---|---|---|---|---|---|---|---|---|---|---|---|---|---|---|---|---|---|---|---|---|---|---|---|---|---|---|---|---|---|---|---|---|---|---|---|---|---|---|---|---|---|---|---|---|---|---|---|---|---|---|---|---|---|---|---|---|---|---|---|---|---|---|---|---|---|---|---|---|---|
| | | | | | | | | | | 61 | 60 | 59 | 58 | 57 | 56 | | | | | | | | | | | | | 43 | 42 | 41 | 40 | | 38 | 37 | 36 | 35 | | | | 31 | | | 28 | 27 | 26 | 25 | | 23 | 22 | 21 | 20 | 19 | | 17 | | 15 | 14 | | | | | | | | | 5 | 4 | 3 | | 1 | 2138952-1 | AU5T-14A464-UA-013 |
| | | | | | | | | | | 61 | 60 | 59 | 58 | | | | | | | | | | | | | | | 43 | | | 40 | | 38 | 37 | | 35 | | | | 31 | | | 28 | 27 | 26 | 25 | | 23 | 22 | 21 | 20 | 19 | | 17 | | 15 | 14 | | | | | | | | | 5 | 4 | 3 | | 1 | 9-2035383-6 | AU5T-14A464-UA-012 |
| | | | | | | | | | | 61 | 60 | 59 | 58 | 57 | 56 | | | | | | | | 48 | 47 | | 45 | 44 | 43 | 42 | 41 | 40 | | 38 | 37 | 36 | 35 | | | | 31 | | | 28 | 27 | 26 | 25 | 24 | 23 | 22 | 21 | 20 | 19 | | | 16 | | 14 | | | | | | | 7 | 6 | 5 | 4 | | 2 | | 7-2035383-7 | AU5T-14A464-UA-011 |
| | | | | | | | | | | 61 | 60 | 59 | 58 | 57 | 56 | | | | | | | | | | | | | 43 | 42 | 41 | 40 | | 38 | 37 | 36 | 35 | | | | 31 | | | 28 | 27 | 26 | 25 | 24 | 23 | 22 | 21 | 20 | 19 | | 17 | | 15 | 14 | | | | | | | | | 5 | 4 | 3 | | 1 | 5-2035383-2 | AU5T-14A464-UA-010 |
| | | | | | | | | | | 61 | 60 | 59 | 58 | | | | | | | | | | | | | | | 43 | | | 40 | | 38 | 37 | | 35 | | | | 31 | | | 28 | 27 | 26 | | 24 | 23 | 22 | 21 | 20 | 19 | | 17 | | 15 | 14 | | | | | | | | | 5 | 4 | 3 | | 1 | 4-2035383-9 | AU5T-14A464-UA-009 |
| | | | | | | | | | | 61 | 60 | 59 | 58 | | | | | | | | | | | | | | | 43 | | | 40 | | 38 | 37 | | 35 | | | | 31 | | | 28 | 27 | | | | | 22 | 21 | | 19 | | 17 | | 15 | 14 | | | | | | | | | 5 | 4 | 3 | | 1 | 4-2035383-4 | AU5T-14A464-UA-008 |
| | | | | | | | | | | 61 | 60 | 59 | 58 | | | | | | | | | | | | | | | 43 | | | 40 | | 38 | 37 | | 35 | | | | 31 | | | 28 | 27 | 26 | | | 23 | 22 | 21 | 20 | 19 | | 17 | | 15 | 14 | | | | | | | | | 5 | | 3 | | 1 | 2-2035383-6 | AU5T-14A464-UA-007 |
| | | | | | | | | | | 61 | 60 | 59 | 58 | | | | | | | | | | | | | | | 43 | | | 40 | | 38 | 37 | | 35 | | | | 31 | | | 28 | 27 | 26 | | | 23 | 22 | 21 | 20 | 19 | | 17 | | 15 | 14 | | | | | | | | | 5 | 4 | 3 | | 1 | 2-2035383-2 | AU5T-14A464-UA-006 |
| | | | | | | | | | | 61 | 60 | 59 | 58 | 57 | 56 | | | | | | | | 48 | 47 | | | | 43 | 42 | 41 | | | 38 | 37 | 36 | | | | | | | | 28 | 27 | | 25 | | | 22 | | | 19 | | 17 | 16 | 15 | 14 | | | | | | | | | 5 | | 3 | 2 | 1 | 1-2035383-6 | AU5T-14A464-UA-005 |
| | | | | | | | | | | 61 | 60 | 59 | 58 | 57 | 56 | | | | | | | | 48 | 47 | 46 | | | 43 | 42 | 41 | 40 | | | | | 35 | | | | 31 | | 29 | 28 | 27 | 26 | 25 | | 23 | 22 | 21 | 20 | 19 | | 17 | | 15 | 14 | | | | | | | | | 5 | 4 | 3 | | 1 | 9-1456659-7 | AU5T-14A464-UA-004 |
| | | | | | | | | | | | | 59 | 58 | | | | | | | | | | 48 | 47 | 46 | | | 43 | 42 | 41 | | | | | | 35 | | | | 31 | | 29 | 28 | 27 | 26 | 25 | 24 | 23 | | 21 | | 19 | | 17 | | 15 | 14 | | | | | | | | | 5 | 4 | 3 | | 1 | 9-1456659-5 | AU5T-14A464-UA-003 |
| | | | | | | | | | | | | 59 | 58 | | | | | | | | | | 48 | 47 | 46 | | | 43 | 42 | 41 | | | | | | 35 | | | | 31 | | 29 | 28 | 27 | 26 | | 24 | 23 | | 21 | | 19 | | 17 | | 15 | 14 | | | | | | | | | 5 | 4 | 3 | | 1 | 9-1456659-4 | AU5T-14A464-UA-002 |
| | | | | | | | | | | 61 | 60 | 59 | 58 | 57 | 56 | | | | | | | | 48 | 47 | | | | 43 | 42 | 41 | 40 | | 38 | 37 | 36 | 35 | | | | 31 | | | 28 | 27 | 26 | 25 | | 23 | 22 | 21 | 20 | 19 | | | 16 | | | | | | | | | | | 5 | 4 | | 2 | | 9-1456659-2 | AU5T-14A464-UA-001 |
| | | | | | | | | | | | | | | | | | | | | | | | | | | | | | | | | | | | | | | | | | | | | | | | | | | | | | | | | | | | | | | | | | | | | | | 1438136-5 | AU5T-14A464-UA-000 |

THIS DRAWING IS A CONTROLLED DOCUMENT.

DIMENSIONS: mm

TOLERANCES UNLESS OTHERWISE SPECIFIED:
0 PLC ±-
1 PLC ±0.3
2 PLC ±0.10
3 PLC ±-
4 PLC ±-
ANGLES ±1°

MATERIAL - -
FINISH - -

DWN R. VESTAL 15APR2005
CHK T. VALASEK 15APR2005
APVD T. VALASEK 15APR2005
PRODUCT SPEC -
APPLICATION SPEC -
WEIGHT -

TE Connectivity

NAME 70-WAY HARNESS ASSEMBLY

SIZE A1 | CAGE CODE 00779 | DRAWING NO C-1438136 | RESTRICTED TO -

CUSTOMER DRAWING | SCALE 2:1 | SHEET 9 OF 11 | REV G47

THIS DRAWING IS UNPUBLISHED. RELEASED FOR PUBLICATION 20
© COPYRIGHT 20 BY - ALL RIGHTS RESERVED.

REVISIONS

| P | LTR | DESCRIPTION | DATE | DWN | APVD |
|---|---|---|---|---|---|
| | - | SEE SHEET 1 | - | - | - |

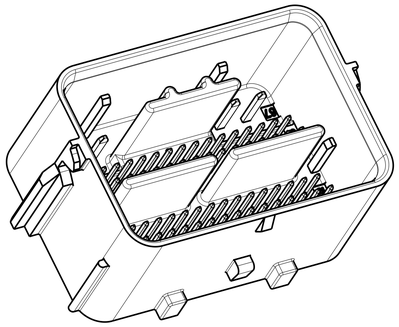

SCALE 2:1

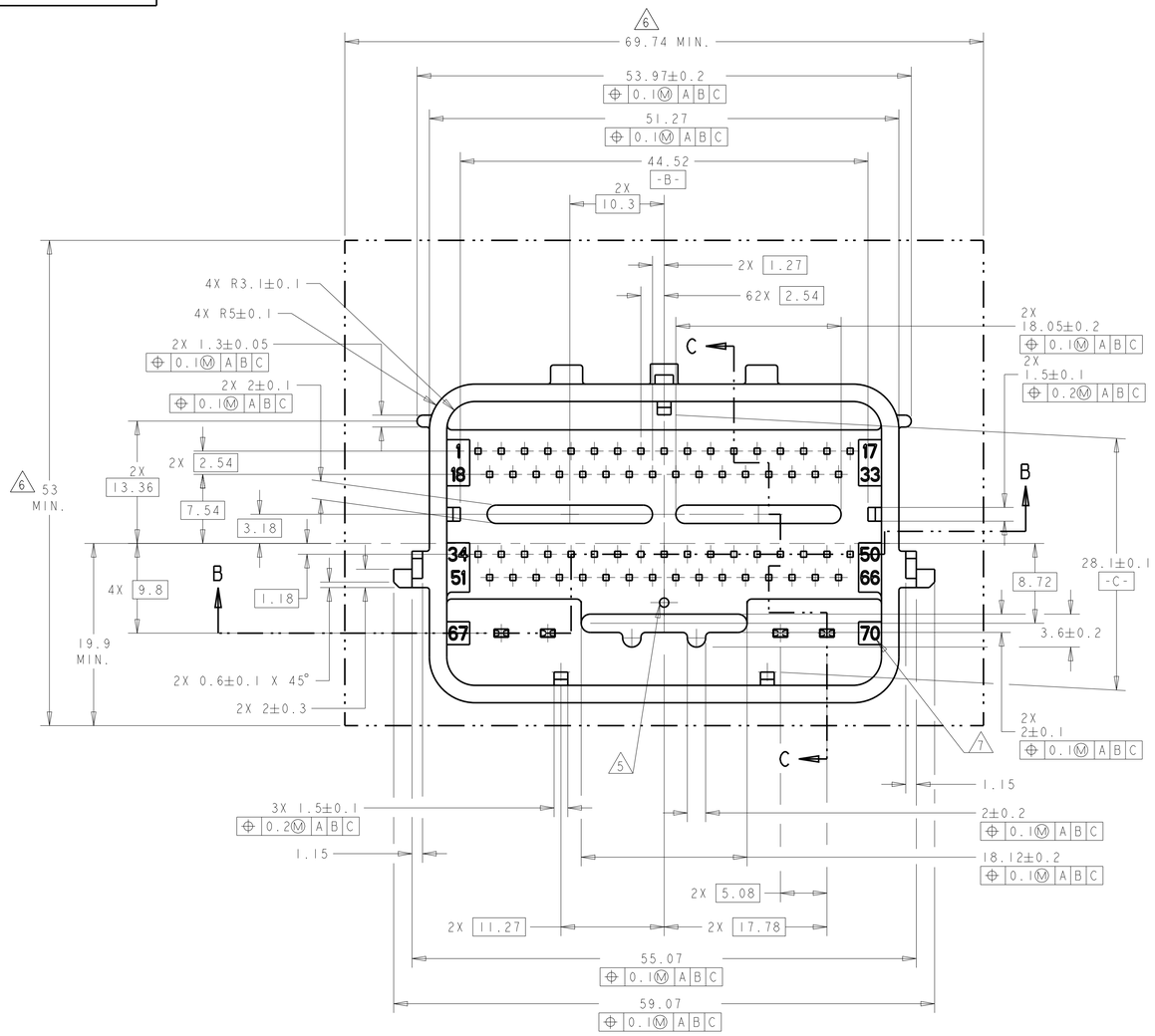


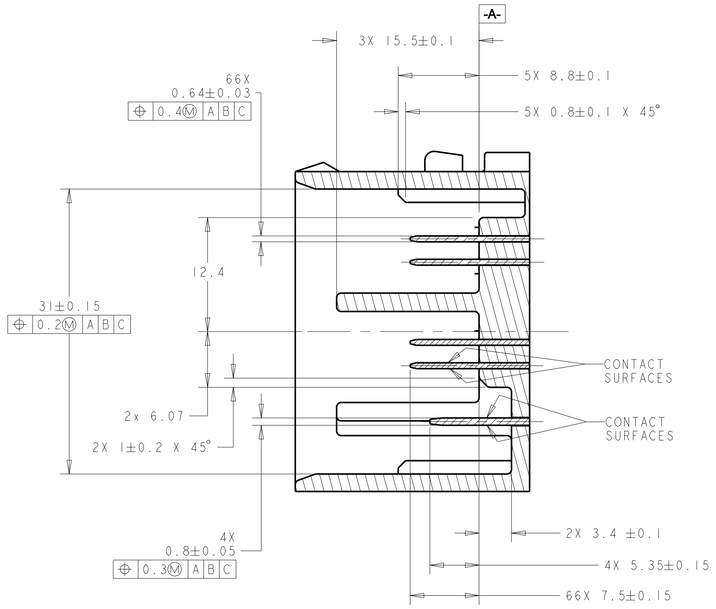


SECTION C-C

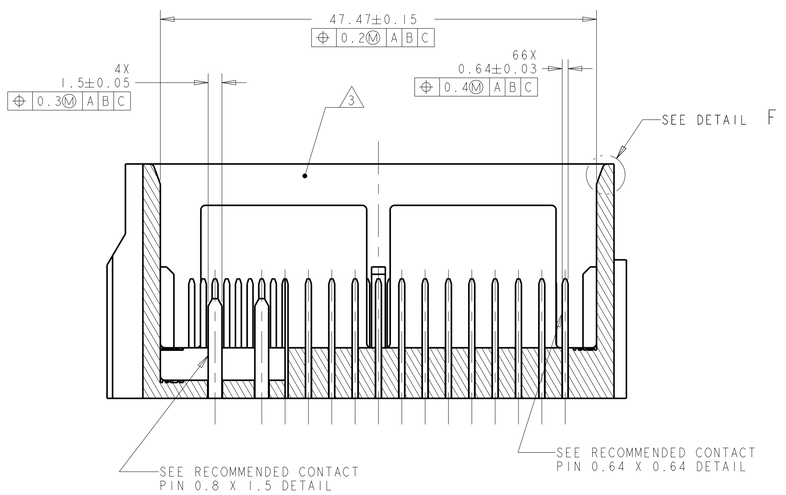


SECTION B-B

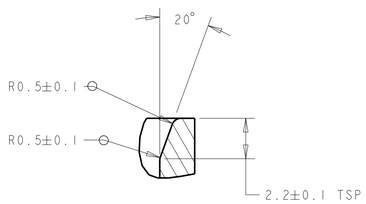


DETAIL F
SCALE 6:1

NOTES: UNLESS OTHERWISE SPECIFIED

1. GENERAL TOLERANCE:
   ±0.3 ALL ONE PLACE DIMENSIONS
   ±0.10 ALL TWO PLACE DIMENSIONS
   ±1°00′ ALL ANGULAR DIMENSIONS
2. DRAFT ANGLE PERMISSIBLE ONLY WITHIN DRAWING TOLERANCE.

3. SEALING SURFACE, NO WITNESS LINES OF DAMAGE PERMITTED.

4. ALL UNMARKED RADII TO BE 0.5 MAX., UNLESS OTHERWISE SPECIFIED

5. VENT HOLE SIZE AND LOCATION IS OPTIONAL.

6. THIS AREA TO REMAIN CLEAR FOR THE HARNESS ASSEMBLY.

7. TERMINAL POSITION INDENTIFICATION.

8. MATES WITH TYCO ELECTRONICS PART# 1438136-*

THIS DRAWING IS A CONTROLLED DOCUMENT.

DIMENSIONS: mm

TOLERANCES UNLESS OTHERWISE SPECIFIED:
0 PLC ±-
1 PLC ±0.3
2 PLC ±0.10
3 PLC ±-
4 PLC ±-
ANGLES ±1°

MATERIAL - -
FINISH - -

DWN R. VESTAL 15APR2005
CHK T. VALASEK 15APR2005
APVD T. VALASEK 15APR2005
PRODUCT SPEC -
APPLICATION SPEC -
WEIGHT -

TE Connectivity

NAME 70-WAY HARNESS ASSEMBLY

| SIZE | CAGE CODE | DRAWING NO | RESTRICTED TO |
|---|---|---|---|
| A1 | 00779 | C-1438136 | - |

CUSTOMER DRAWING

| SCALE | SHEET | OF | REV |
|---|---|---|---|
| 2:1 | 10 | 11 | G47 |

THIS DRAWING IS UNPUBLISHED. RELEASED FOR PUBLICATION 20
© COPYRIGHT 20 BY - ALL RIGHTS RESERVED.

# HEADER INTERFACE KEYING OPTIONS

REVISIONS

| P | LTR | DESCRIPTION | DATE | DWN | APVD |
|---|---|---|---|---|---|
| | - | SEE SHEET 1 | - | - | - |

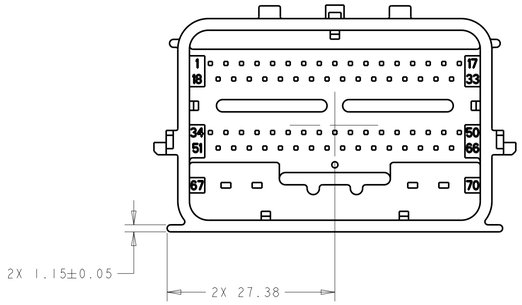


KEYING OPTION "A"
SCALE 2:1

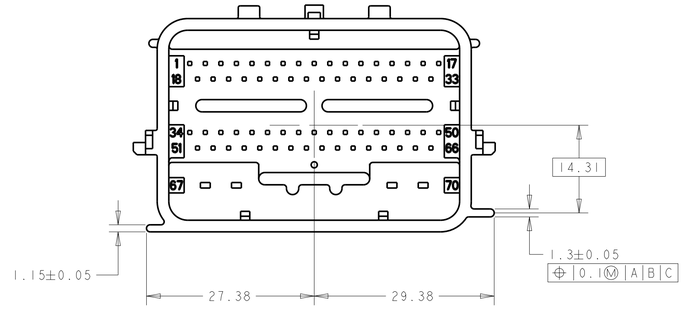


KEYING OPTION "B"
SCALE 2:1

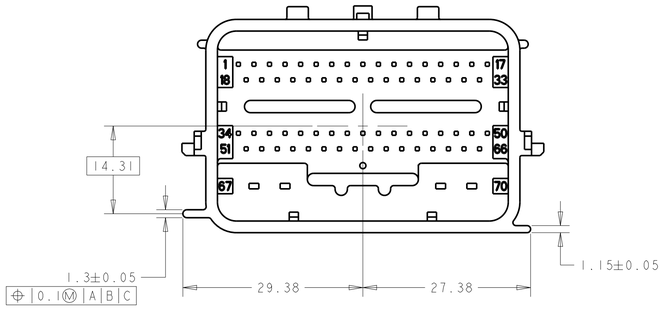


KEYING OPTION "D"
SCALE 2:1

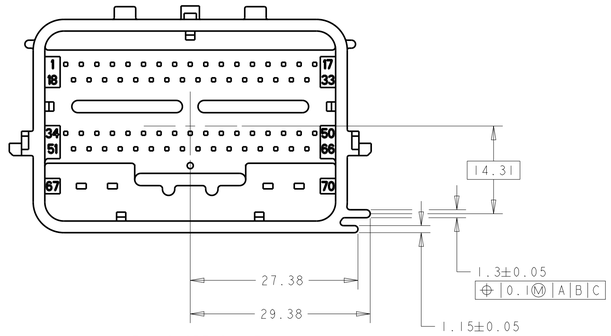


KEYING OPTION" E"
SCALE 2:1

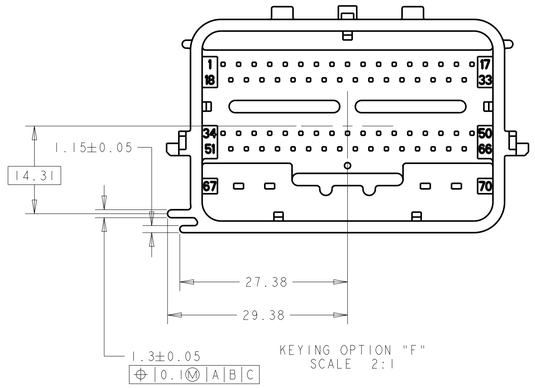


KEYING OPTION "F"
SCALE 2:1

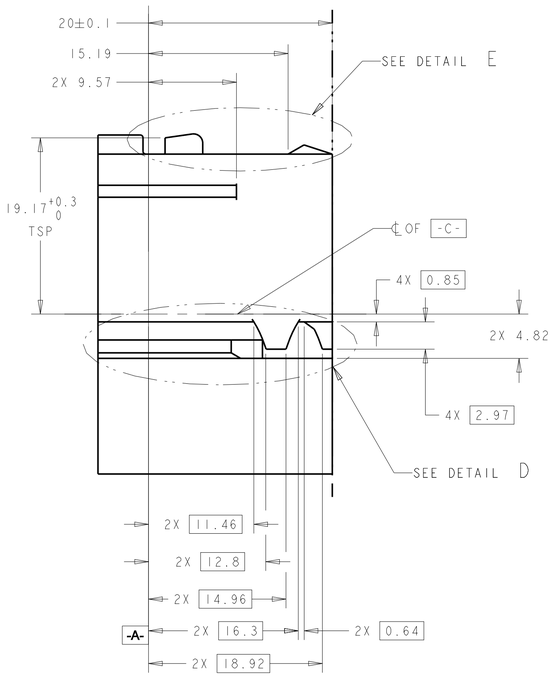


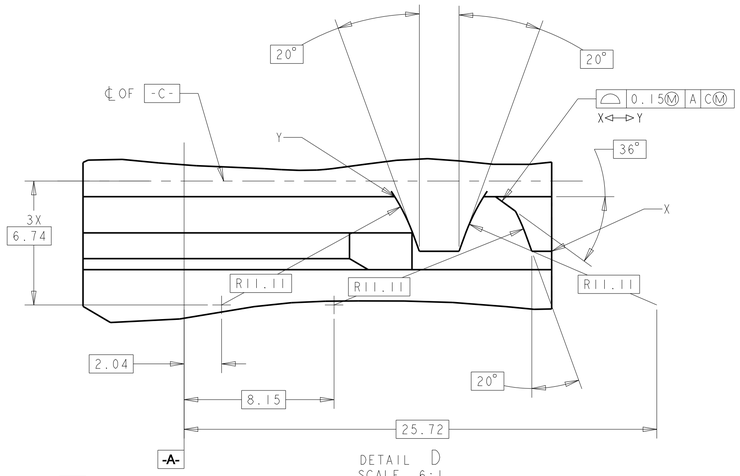


DETAIL D
SCALE 6:1
TYP. 2 PLCS.

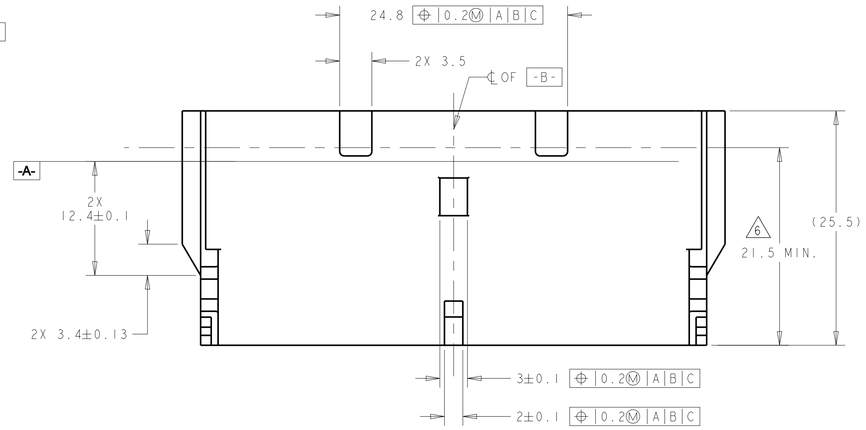


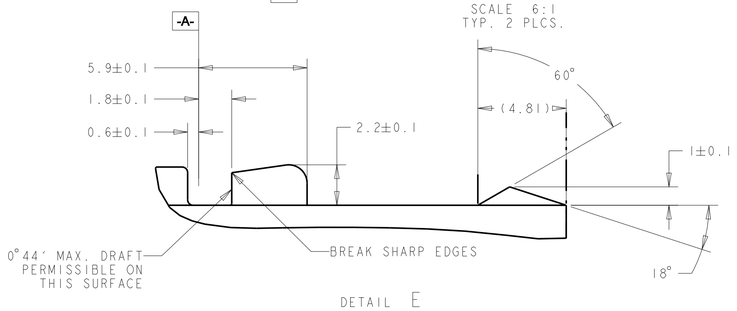


DETAIL E
SCALE 6:1

THIS DRAWING IS A CONTROLLED DOCUMENT.

DIMENSIONS: mm

TOLERANCES UNLESS OTHERWISE SPECIFIED:
0 PLC ±-
1 PLC ±0.3
2 PLC ±0.10
3 PLC ±-
4 PLC ±-
ANGLES ±1°

MATERIAL -
FINISH -

DWN R. VESTAL 15APR2005
CHK T. VALASEK 15APR2005
APVD T. VALASEK 15APR2005
PRODUCT SPEC -
APPLICATION SPEC -
WEIGHT -

TE Connectivity

NAME 70-WAY HARNESS ASSEMBLY

SIZE A1 | CAGE CODE 00779 | DRAWING NO C-1438136 | RESTRICTED TO -

CUSTOMER DRAWING | SCALE 2:1 | SHEET 11 OF 11 | REV 647

4805 (3/13)

# Mouser Electronics

Authorized Distributor

Click to View Pricing, Inventory, Delivery & Lifecycle Information:

TE Connectivity:

3-2035383-7