THIS DRAWING IS UNPUBLISHED. RELEASED FOR PUBLICATION - ,- .
© COPYRIGHT - BY TYCO ELECTRONICS CORPORATION. ALL RIGHTS RESERVED.

LOC	DIST
GP	00

REVISIONS

P	LTR	DESCRIPTION	DATE	DWN	APVD
	03	REVISED PER ECO-07-018152	06AUG07	BM	CR

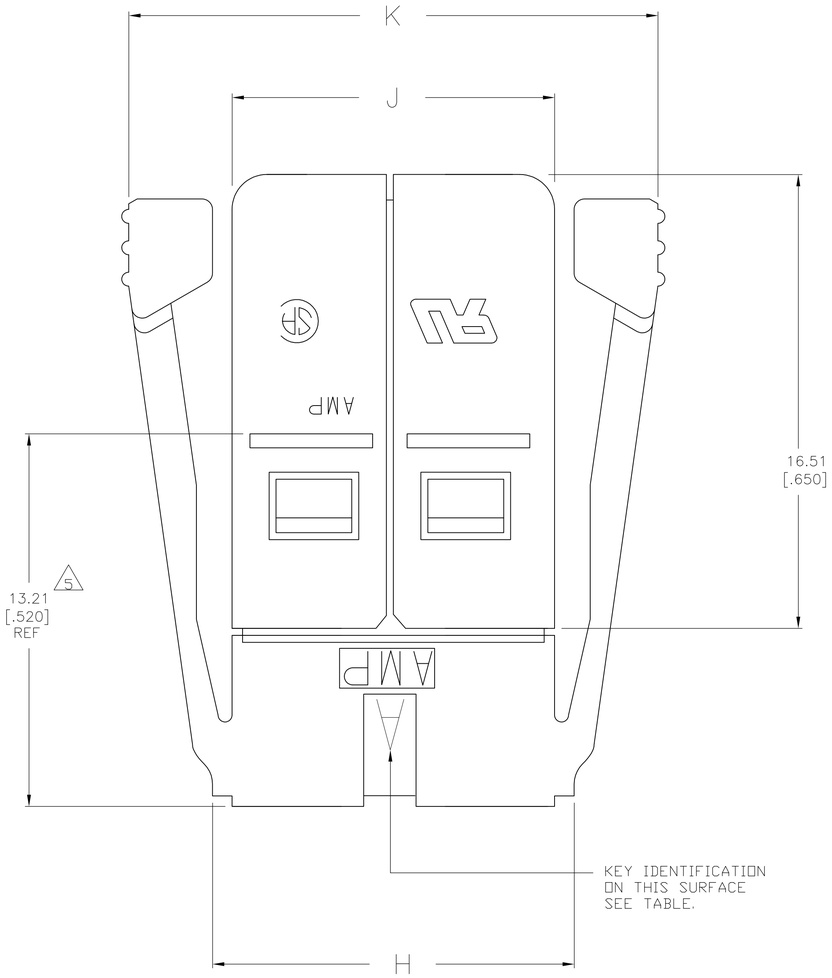

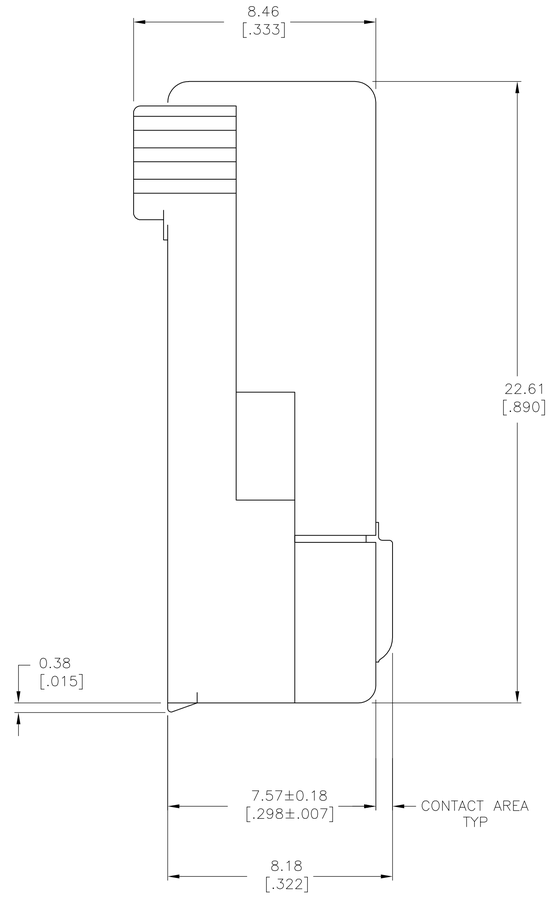

1. PREFIX AND SUFFIX NUMBERS MUST MATCH THOSE ON RECEPTACLE FOR PARTS TO MATE.

2. MATERIAL:
   HOUSING- POLYCARBONATE
   CONTACT- COPPER ALLOY
   SHIELD- BRASS

3. FINISH:
   HOUSING- SMOKE GRAY
   CONTACT- 0.00127[.000050] MIN NICKEL OVER ENTIRE PART,
   0.00002[.000001] GOLD FLASH OVER ENTIRE PART,
   0.00127[.000050] MIN GOLD OVER CONTACT AREA.
   SHIELD- BRIGHT TIN 0.00076[.000030] MIN OVER 0.00127[.000050] MIN NICKEL.

4. FOR TERMINATION OF CABLE WHOSE INDIVIDUAL CONDUCTORS HAVE AN INSULATION DIA OF 0.91[.036] NOMINAL.

5. INSERTION DEPTH INTO RECEPTACLE.

6. FOR TERMINATION OF 26 OR 28 AWG, 7 STRANDED, FLAT RIBBON CABLE WITH 0.89[.035] TO 0.96[.038] O.D. PVC CONDUCTOR INSULATION. SEE 520822-1 FOR DETAIL.

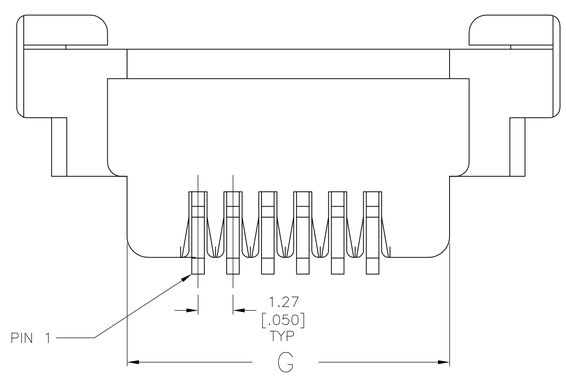

	K	J	H	G	NO OF POSN	KEY ID	PART NUMBER
	21.95 [.864]	14.60 [.575]	15.54 [.612]	14.43 [.568]	8	E	5-1761187-3
	16.87 [.664]	9.53 [.375]	10.46 [.412]	9.35 [.368]	4	E	5-1761187-1
OBSOLETE	16.87 [.664]	9.53 [.375]	10.46 [.412]	9.35 [.368]	4	D	4-1761187-1
	32.11 [1.264]	24.76 [.975]	25.78 [1.015]	24.59 [.968]	16	A	1-1761187-6
	16.87 [.664]	9.53 [.375]	10.46 [.412]	9.35 [.368]	4	A	1-1761187-1

THIS DRAWING IS A CONTROLLED DOCUMENT.

DIMENSIONS: mm [INCHES]

TOLERANCES UNLESS OTHERWISE SPECIFIED:
0 PLC ± –
1 PLC ± –
2 PLC ± 0.25 [.010]
3 PLC ± –
4 PLC ± –
ANGLES ± –

MATERIAL 2 | FINISH 3

DWN B. MCMASTER 26APR04
CHK C. ROHDE 26APR04
APVD M. WALMSLEY 26APR04
PRODUCT SPEC 108-2047
APPLICATION SPEC 114-2086
WEIGHT –

Tyco Electronics
Tyco Electronics Corporation
Harrisburg, PA 17105-3608

NAME PLUG ASSEMBLY, FLAT CABLE, 36 SERIES, SDL

SIZE	CAGE CODE	DRAWING NO	RESTRICTED TO
A1	00779	C-1761187	–

CUSTOMER DRAWING | SCALE 10:1 | SHEET 1 OF 1 | REV 03

Mouser Electronics

Authorized Distributor

Click to View Pricing, Inventory, Delivery & Lifecycle Information:

TE Connectivity:

1-1761187-6