DRAWING MADE IN THIRD ANGLE PROJECTION

THIS DRAWING IS UNPUBLISHED. RELEASED FOR PUBLICATION ,19 .

© COPYRIGHT 19 BY AMP INCORPORATED. ALL INTERNATIONAL RIGHTS RESERVED.

LOC	DIST
G	14

REVISIONS				
ZONE	LTR	DESCRIPTION	DATE	APPD
	0	RELEASED PER 0720-0008-93	2-16-93	TAB DAP

METRIC

DIMENSIONS LISTED IN mm [INCHES]

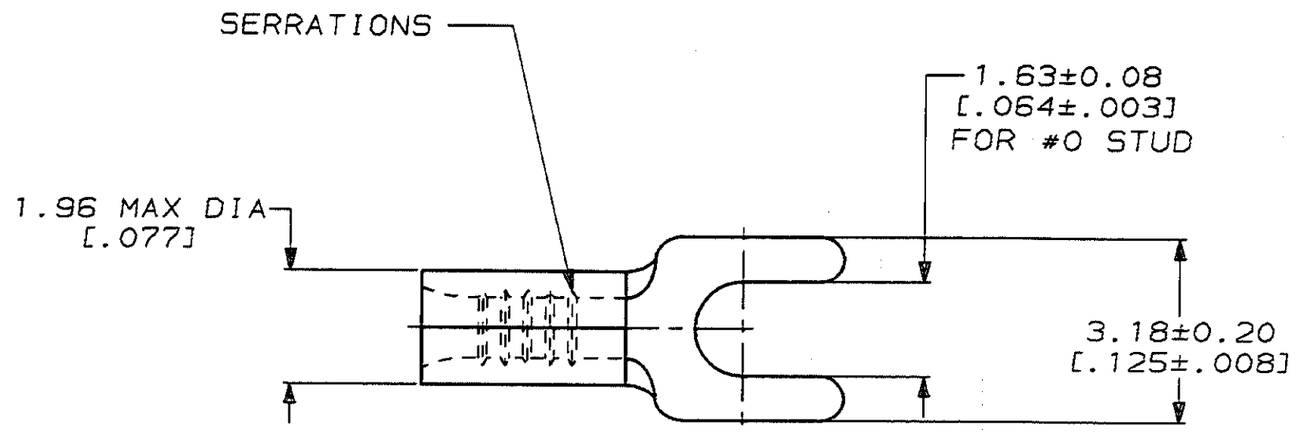

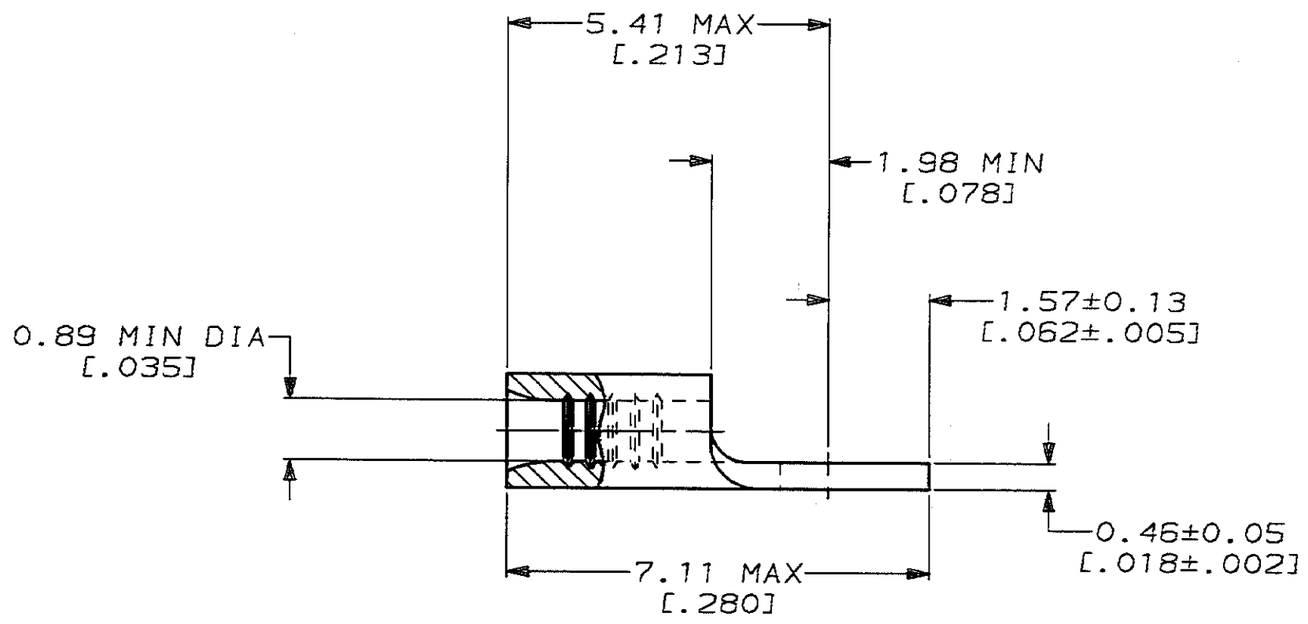

AMP WIRE RANGE	E13288 Listed
26-22 AWG STRANDED	NOT LISTED
LR7189 Certified	MILITARY P/N AND CLASS
NOT CERTIFIED	NOT APPLICABLE

32501

PART NO

AMP INCORPORATED
CUSTOMER SERVICE SYSTEMS

FOR ADDITIONAL PRODUCT INFORMATION OR COPIES OF DRAWINGS AND TECHNICAL DOCUMENTS	PRODUCT INFORMATION CENTER 1-800-522-6752
FOR APPLICATION TOOLING INFORMATION	TOOLING ASSISTANCE CENTER 1-800-722-1111
FOR ORDER ENTRY	1-800-526-5142

MAX RECOMMENDED OPERATING TEMPERATURE: 170°C MAX

VOLTAGE RATING: NOT APPLICABLE

WIRE CROSS SECTIONAL AREA RANGE: 0.1-0.41mm² [202-810] CIR MILS STRANDED

THIS DRAWING IS A CONTROLLED DOCUMENT FOR AMP INCORPORATED. IT IS SUBJECT TO CHANGE AND THE CONTROLLING ENGINEERING ORGANIZATION SHOULD BE CONTACTED FOR THE LATEST REVISION.

DO NOT SCALE PRINT.
UNLESS SPECIFIED
~~DIMENSIONS IN mm [INCHES]~~
TOLERANCES ON :
2 PLC DEC ± -
3 PLC DEC ± -
ANGLES ± -

MATERIAL: COPPER PER ASTM B-152 ANNEALED

FINISH: TIN PLATE 0.00254[.000100] MIN THK PER MIL-T-10727

DR	2-16-93 TA BRINKMAN
CHK	2-16-93 DA PATTERSON
APPD	2-16-93 DE MILLER
APPD	2-16-93 JL MECKLEY
PRODUCT SPEC	-
APPLICATION SPEC	-
WEIGHT	-

AMP Incorporated
Harrisburg, PA 17105-3608

NAME: TERMINAL, SPADE TONGUE, BUDGET

SIZE	CAGE CODE	DRAWING NO
C	00779	C-32501
SCALE 10:1		SHEET 1 OF 1

CUSTOMER DRAWING

AMP 1471-6 REV 3-92

21 JUL 1993 13:40:44 AMP26463 <US128A>DEPT1123>DWG1123>U.BODIES>U.26-22

Mouser Electronics

Authorized Distributor

Click to View Pricing, Inventory, Delivery & Lifecycle Information:

TE Connectivity:
32501