THIS DRAWING IS UNPUBLISHED. RELEASED FOR PUBLICATION .2000
© COPYRIGHT 2000 BY - ALL RIGHTS RESERVED.

PN 0-1,1-1 & 2-1

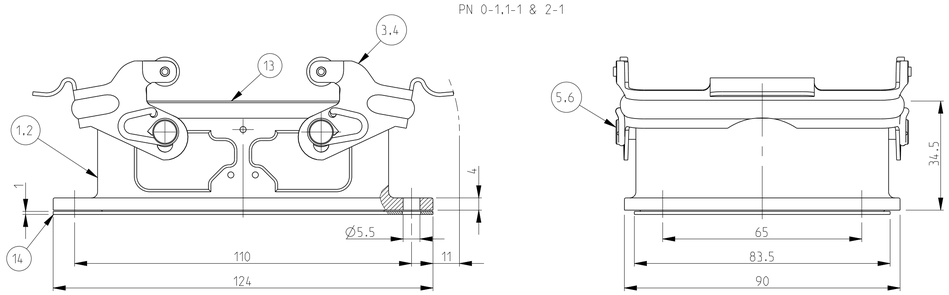

PN 0-2 & 1-2

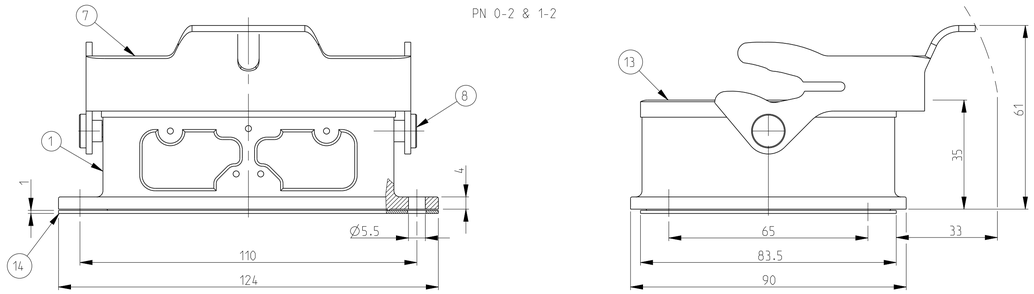

PN 1-8 & 2-8

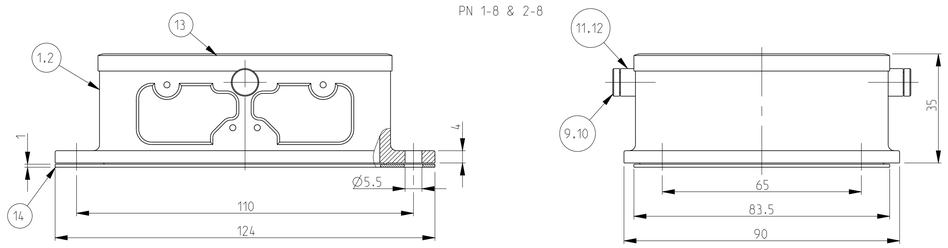

PN 0-3 & 1-3

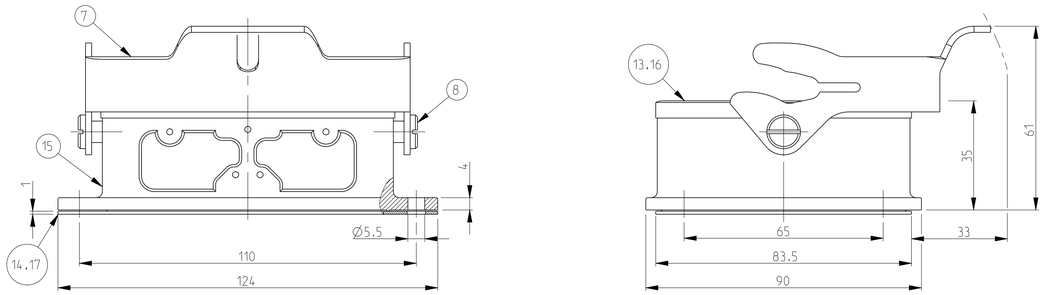

Landing milled off

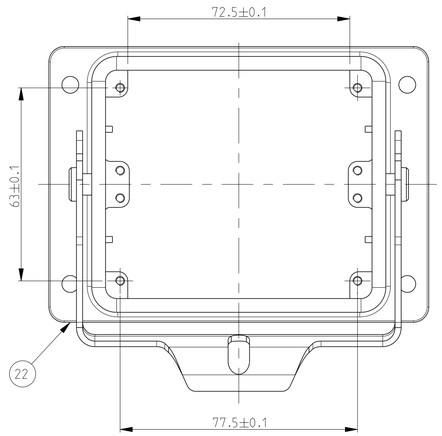

PANEL CUT-OUT

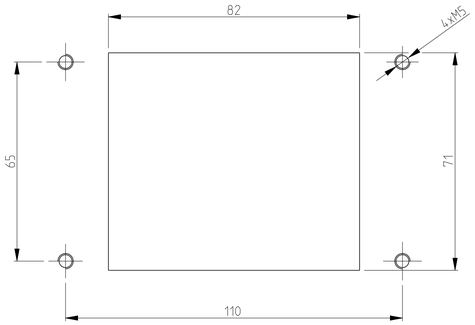

REVISIONS						
P	LTR	DESCRIPTION	DATE	DWN	APVD
	A8	ECR - 001736	23SEP2009	GW	ST
	A9	ECR-09-022013	09OCT2009	AR	ST
	A10	ECR-16-015318	26OCT2017	GR	MKO
	A11	REVISED PER ECR-17-013084	12JAN2018	SRG	MKO

NOTES.

1 Material:Housing:Aluminium Diecasting Alloy
Seals Neoprene

2 Surface:Aluminium oxide + Varnish black
- Grey

3 Varnish on the inside not necessary

4 TE Logo removed.

5 Packaging Quantity 3 Pieces in a box

PN 1-8 & 2-8

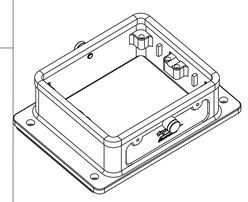

SCALE 1:2

PN 0-2 & 1-2

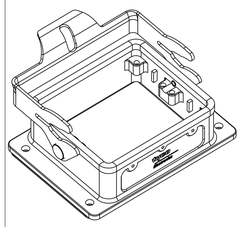

SCALE 1:2

PN 0-1,1-1 & 2-1

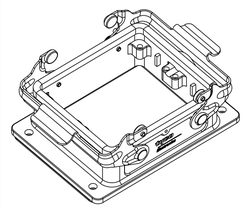

SCALE 1:2

PN 0-3 & 1-3

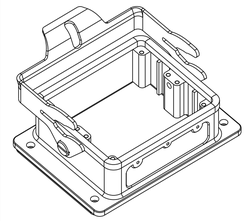

SCALE 1:2

1-3	0-3	2-8	1-8	1-2	0-2	2-1	1-1	0-1	DESCRIPTION	MATERIAL	SURFACE	COLOR	ITEM NO	NOTES
OBSOLETE		OBSOLETE	OBSOLETE	OBSOLETE	OBSOLETE	OBSOLETE	OBSOLETE	OBSOLETE						
1									Flange seal	Viton		Grey	17	
1									Profile seal	Viton		Grey	16	
	1								Surface mounted housing bottom entry HB	Aluminium		Grey	15	Neutral
	1	1	1	1	1	1	1	1	Flange seal	Rubber		Black	14	
	1	1	1	1	1	1	1	1	Profile seal	Neoprene		Black	13	
		2							ZB-Slide spool	Stainless steel			12	
			2						ZB-Slide spool	Steel	Zinc plated	Blue	11	
		2							ZB-Clip bolt	stainless steel			10	
			2						ZB-Clip bolt	Steel	Zinc plated	Blue	9	
2	2			2	2				LB-Clip positioner	Steel	Zinc plated	Blue	8	
1	1			1	1				LB-Side clip	Steel	Zinc plated	Blue	7	
						4			VS-Clip positioner	Stainless steel			6	
							4	4	VS-Clip positioner	Steel	Zinc plated	Blue	5	
						2			VS-Side clip	stainless steel			4	
							2	2	VS-Side clip	Steel	Zinc plated	Blue	3	
		1				1			Surface mounted housing bottom entry HB-K	Aluminium	Aluminium oxide	Black	2	
			1	1	1		1	1	Surface mounted housing bottom entry HB	Aluminium		Grey	1	
					⚠		⚠		ORDERING TEXT					
									~~HB.32.AG-VS~~					
									~~HB.32.AG-VS~~					
									~~HB-K.32.AG-VS~~					
									~~HB.32.AG-LB~~					
									~~HB.32.AG-LB~~					
									~~HB-Z.32.AG-ZVGR~~					
									~~HB-K/Z.32.AG-ZVGR~~					
									HB.32.AG-LB					
									HB.32.AG-LB					

THIS DRAWING IS A CONTROLLED DOCUMENT.

DIMENSIONS: mm

TOLERANCES UNLESS OTHERWISE SPECIFIED: ISO 2768-mK; ISO 2768-mK; ISO 8015 ISO/TC10

0 PLC	±
1 PLC	±
2 PLC	±
3 PLC	±
4 PLC	±
ANGLES	±

MATERIAL

FINISH

DWN Schneider 27.09.2002
CHK Schweiger 27.09.2002
APVD -
PRODUCT SPEC -
APPLICATION SPEC -
WEIGHT -

TE Connectivity

NAME Surface mounted housing bottom entry HB.32.AGD

SIZE	CAGE CODE	DRAWING NO	RESTRICTED TO
A1	00779	C-1102352	

CUSTOMER DRAWING

SCALE	SHEET	OF	REV
1:1	1	1	A11

4805 (3/13)